Board of Commissioners Meeting
March 10, 2015
PD Community Room
6:30 PM

I. **COMMENCEMENT**
   A. Call to Order
   B. Ceremonial Opening
   C. Adoption of Agenda

II. **PUBLIC COMMENTS**

III. **CONSENT AGENDA**
   A. Approval of Minutes and Seal Closed Session
      1) December 12, 2014 Work Session
      2) December 17, 2014 Work Session
   B. Approval of March Tax Refunds
   C. Approval of Budget Amendments for Fiscal Year 2014/2015
   D. Approval of Delinquent Tax Advertisement
   E. Approval of the Tax Report from January & February
   F. Approval of Contract for Cemetery Arbor (Southside) and Downtown Well Arbor Repairs
   G. Approval of Town Surveillance Policy
   H. Approval of Downtown Park Tree Removal

IV. **RECOGNITIONS & REPORTS**
   A. Mayor's Report
   B. Commissioner's Report
   C. Union Power Cooperative Grant Presentation to Waxhaw Entrepreneurs Business Incubator for Created in the Carolinas
      Presenter: Luanne Sherron
   D. YMCA Partnership Report & Discussion
      Presentation: Steve Maher, Commissioner, and Steve Bowers, YMCA Vice President
      Open Q & A Regarding YMCA Discussion

V. **PUBLIC HEARING**
   A. Petition RZ-003035-2014
      Request by McCray Smith, on behalf of Cray, Inc, for a rezoning/map amendment on parcel 06-138-001 from R4 (Single-family Residential) to C1 (Neighborhood Commercial) located at 3808 South Providence Road.
      Presenter: Lisa McCarter
   B. Petition TA-003098-2015
      Request by Staff, on behalf of the Board of Commissioners, to amend Section 16.1.9 (Effect of Denial on Subsequent Petitions) and Section

16.2.11 (Twelve-Month Limitation on Re-Application) of the Waxhaw Unified Development Ordinance to revise the requirements with regard to the twelve-month resubmission period on re-application after a denial of a rezoning or conditional rezoning application by the Board of Commissioners.
Presenter: Chris Rice

VI. **NEW BUSINESS**

A. Discussion and Possible Action of the YMCA Agreement
Presenter: Steve Maher

B. Discussion and Possible Action involving Transition of Interim Town Manager with new Town Manager
Presenter: Chaplin Spencer

C. Discussion and Possible Action on Increasing the Town Manager's Contract Approval Threshold to $15,000
Presenter: Steve Maher

VII. **CLOSED SESSION**

A. Personnel, contractual matters and to seek legal counsel per G. S. 143.318.11: Personnel, Contractual Matters and Real Estate

VIII. **ADJOURNMENT**

To speak concerning an item on the Agenda, please print your name and address on the signup sheet on the counter prior to the meeting. Each speaker will be limited to 3 minutes.

PLEASE SILENCE YOUR CELL PHONES WHILE MEETING IS IN PROGRESS

REFUNDS

DATE	PARCEL #/ PRIVILEGE LICENSE/ PERMIT	OWNER NAME or PAYABLE TO	PRIVILEGE LICENSE NAME	OWNER ADDRESS	REFUND AMOUNT
2/18/2015	05114198 - Overpayment	McMillan, Psaroudis & Markey, PA		6101 Carnegie Blvd., Ste. 310, Charlotte, NC 28209	$387.39
				TOTAL	**$387.39**

TOWN OF WAXHAW
2014-2015 GENERAL FUND BUDGET AMENDMENTS

TOWN OF WAXHAW GENERAL FUND REVENUES	2014-2015 BOARD APPROVED	AFTER 10/14/14 BUDGET AMENDMENTS	01/27/15 REQUESTED BUDGET AMENDMENTS	INCREASE	DECREASE	03/10/2015 REQUESTED BUDGET AMENDMENTS
REVENUES						
TOTAL	**8,756,363**	**8,820,038**	**8,820,038**			**8,820,038**
12-320-999 - Undesignated Fund Balance	**122,185**	**122,185**	**122,185**	1,400,000		1,400,000
TOTAL REVENUES FOR FUND	**8,878,548**	**8,942,223**	**8,942,223**	**1,400,000**		**10,342,223**

TOWN OF WAXHAW EXPENSES	2014-2015 BOARD APPROVED	AFTER 10/14/14 BUDGET AMENDMENTS	01/27/15 REQUESTED BUDGET AMENDMENTS	INCREASE	DECREASE	03/10/2015 REQUESTED BUDGET AMENDMENTS
12-298-001 - Transfers Out to Capital Projects	669,200	669,200	669,200	$1,400,000		**$2,069,200**
12-298-002 - Transfers Out to Grant Fund	96,385	96,385	96,385			**$96,385**
ADMINISTRATION TOTALS	**1,767,067**	**1,776,267**	**1,747,752**			**$1,747,752**
POLICE TOTALS	**2,529,568**	**2,529,568**	**2,529,568**			**$2,529,568**
BUILDING INSPECTIONS TOTALS	**477,020**	**477,020**	**480,520**			**$480,520**
PCD TOTALS	**988,938**	**988,938**	**991,253**			**$991,253**
PARKS AND REC TOTALS	**72,152**	**136,527**	**159,227**			**$159,227**
PUBLIC SERVICE TOTALS	**2,374,603**	**2,364,703**	**2,364,703**			**$2,364,703**
TOTAL GENERAL BUDGET AMENDMENTS	**8,878,548**	**8,942,223**	**8,942,223**	**$1,400,000**		**10,342,223**

TOWN OF WAXHAW

2014-2015 CAPITAL PROJECTS BUDGET AMENDMENTS

Town of Waxhaw Capital Projects	2014-2015 BOARD APPROVED	AFTER 10/14/14 BUDGET AMENDMENTS	REQUESTED 01/27/15 BUDGET AMENDMENTS	INCREASE	DECREASE	REQUESTED 03/10/15 BUDGET AMENDMENTS
Revenues						
14-300-001 Capital Project Transfers In	669,200	669,200	669,200	1,400,000		2,069,200
14-315-001 Capital Project Fund Interest						
14-399-001 Capital Fund Balance Appropria			315,476			315,476
Total Capital Revenues	**669,200**	**669,200**	**984,676**	**1,400,000**		**2,384,676**
Total Administration Expenses	**237,700**	**237,700**	**553,176**	**1,400,000**		**1,953,176**
Total Police Expenses	**111,000**	**111,000**	**111,000**			**111,000**
Total Building Inspections Expenses	**35,000**	**35,000**	**35,000**			**35,000**
Total Park and Rec Expenses	**140,000**	**205,000**	**205,000**			**205,000**
Total Public Services Expenses	**145,500**	**80,500**	**80,500**			**80,500**
Total Capital Project Fund Expenses	**669,200**	**669,200**	**984,676**	**1,400,000**		**2,384,676**

TOWN OF WAXHAW

P.O. Box 6
1150 North Broome Street, Waxhaw, N.C 28173
Telephone (704) 843-2195 Fax (704) 843-2196
www.waxhaw.com

Hours: Monday-Friday 8:00 a.m. to 5:00 p.m.

MAYOR
DAUNE GARDNER

TOWN COMMISSIONERS
MICHAEL STEWART (Mayor Pro-Tem)
PAUL FITZGERALD
JOHN HUNT
STEPHEN MAHER
JAMES WARNER

INTERIM TOWN MANAGER
GREGORY MAHAR

TOWN CLERK
MELODY SHULER

TO: Town Board

FROM: Ann Sutton, Tax Collector

DATE: March 10, 2015

RE: Advertisement of Delinquent 2014 Taxes

This memo is to request that advertisement of 2014 delinquent taxes take place on March 13, 2015.

The advertisement of delinquent taxes is required under G.S. 105-369.

Thank you,

Ann Sutton
Certified Tax Collector
Town of Waxhaw

Monthly Tax Report
JANUARY - FEBRUARY, 2015

TAX YEAR	NET TAXES BILLED	DISCOVERIES/ BILLED	LIENS ADDED TO BILLS	ADJUST-MENTS/INTE REST	TOTAL CHARGES	YTD COLLECTIONS	PERCENT COLLECTED	BALANCE DUE
2014	$ 5,441,447.49	$ 879.38		$ 8,090.57	$ 5,450,417.44	$ 5,329,314.13	97.78%	$ 121,103.31
2013	$ 4,813,136.91			$ 629.89	$ 4,813,766.80	$ 4,772,352.49	99.14%	$ 41,414.31
2012	$ 4,496,699.81			$ 368.92	$ 4,497,068.73	$ 4,465,864.76	99.31%	$ 31,203.97
2011	$ 4,337,022.64			$ 279.31	$ 4,337,301.95	$ 4,313,492.82	99.45%	$ 23,809.13
2010	$ 4,284,652.14			$ 237.22	$ 4,284,889.36	$ 4,263,701.07	99.51%	$ 21,188.29
2009	$ 4,119,927.70			$ 175.74	$ 4,120,103.44	$ 4,103,518.34	99.60%	$ 16,585.10

OTHER YEARS TAX COLLECTIONS 01/01/15 to 02/28/15

YEAR	TAX PAID	Amount Owed
2008	$ 17.03	$ 9,491.86
2007	$ -	$ 6,909.72
2006	$ -	$ 6,337.63
2005	$ -	$ 4,833.89

2014-2015 MOTOR VEHICLE TAX DEPOSITS 07/01/14 TO 06/30/2015: $ 302,533.51

2014-2015 PRIVILEGE LICENSE PAID 07/01/14 TO 06/30/15: $ 7,236.86

Ann F. Sutton
Certified Tax Collector

TOWN OF WAXHAW

Public Service Department
402 Brevard St.
Waxhaw, N.C 28173
Telephone (704) 843-7439 • Fax (704) 843-7355
www.waxhaw.com

Hours: Monday-Friday 7:00 a.m. to 4:00 p.m.

PUBLIC SERVICE DIRECTOR
N. TODD MATTHEWS JR.

PUBLIC SERVICE ADMINSTRATIVE ASSISTANT/ SOUTHSIDE CEMETERY MANAGER
MARION P. MORTON

March 2, 2015

To: Mayor Daune Gardner
Town of Waxhaw Board of Commissioners

From: Marion P. Morton MPM
Southside Cemetery Manager
Public Services Dept.

Re: Bid award for repairs to the arbor in the Southside Cemetery and the downtown well arbor

As I have discussed with several of you previously, it has become necessary to make repairs to the historic arbor located in the mid-section of the Southside Cemetery as well as to the well structure located on West North Main Street. The roofs on both of these consist of wooden shake shingles that need to be replaced along with repairs being made to the underlying foundations. Attached to this memo you will find two bids that we have secured in order to complete these repairs. This type restoration can be very tedious and finding quality contractors willing to do these small jobs has proven to be quite a challenge.

After careful consideration and visual inspection of craftsmanship of vendors, I am respectfully requesting that the bid for these repairs be awarded to Mr. Mark Hernig in the amount of $16,250.00. (Option #2) Not only is Mr. Hernig's bid the lower of the two received, he has vast experience in this type of construction. As many of you know, he has overseen and completed construction of the structures on the campus of the Museum of the Waxhaws, all of which use this method of roofing. I have included photographs of his work at that location within this package also. Mr. Hernig has spent a considerable amount of time both researching and working on the designs of such historic structures and has demonstrated an exemplary level of skill when working with these type projects. His meticulous attention to details and his experience and expertise working in these scenarios promises to assure that these repairs will be in keeping with the Town's strong desire to preserve its historic landmarks while making any repairs and/or renovations consistent with their original state.

In addition to Mr. Hernig's bid amount of $16,250. 00, I am requesting an additional $1,600.00 (10%) be approved for any unexpected expenses that might be incurred. This additional amount will be used only if absolutely necessary. The funds for this project will be covered through the Cemetery Maintenance and Beautification lines contained within the Public Services budget.

Thank you in advance for your consideration of this matter. Please feel free to contact me with any questions or concerns that you might have.

CC: Greg Mahar, Interim Town Manager
Melody Shuler, Town Clerk
Todd Matthews, Public Services Director

Bid #1

Ron Hetrick

1/22/2015

704-562-9032

This proposal, unless specified otherwise, includes labor and materials not to exceed proposed pricing.

Changes made to this proposal may include additional charges and/or fees.

****

Proposal to Town of Waxhaw for; Removal and replacement of cedar shakes on Well Monument and the Pavilion in the Cemetery. Town to provide trash receptacle. $17,760.00

Payment for proposed work will be made as follows... $8,760.00 at start, $5,000.00 after two weeks, remainder upon completion.

The above prices, specs, and conditions are satisfactory and are hereby accepted. You are authorized to do the work as specified.

Payment will be made as outlined above ----------

Bid #2

Marion Morton

From: Mark <mhernig@yahoo.com>
Sent: Sunday, March 01, 2015 6:40 PM
To: Marion Morton
Subject: Quote to replace wood shingle roof on cemetery arbor and well structure

Project details:

Remove old shingles and plywood sheathing from both structures. Replace the plywood sheathing with 2 by 4 nailer stripping, then reshingle. The 2 by 4 stripping will be nailed to roof rafters at intervals coinciding with the shingle reveal (the amount left visible).This method of attaching the shingles maximizes the exposure of the shingles, bottom side, to air flow facilitating its drying effect. This, in turn, increases the life of the shingles, and roof.

Town would supply:

Lumber (projected cost) - $900.00

Regular #12 or #16 framing nails, and hot dipped galvanized roofing nails. - approx: $100 (The hot dipped galv. nails are necessary due to the wood treatment ingredients of the shingles.

Treated Lifepine shingles - 8 squares of 18" shingles for double overlap method - $2200.00 (Option 1)

or

10 squares of 24" shingles for triple overlap method - $3250.00 (Option 2)

Contractor would supply tools, equipment and labor necessary to complete job. Removal of all construction debris is included. $12,000.00

Total Option 1 - $15,200.00
Total Option 2 - $16,250.00

Mark Hernig
Han Dun Trades
3503 Collins Rd.
Waxhaw, NC 2813
mhernig@yahoo.com

Lumber

Sent from my iPad

Option 1

18" shingle

7½ reveal

$2200

(shingle material)

8 squares

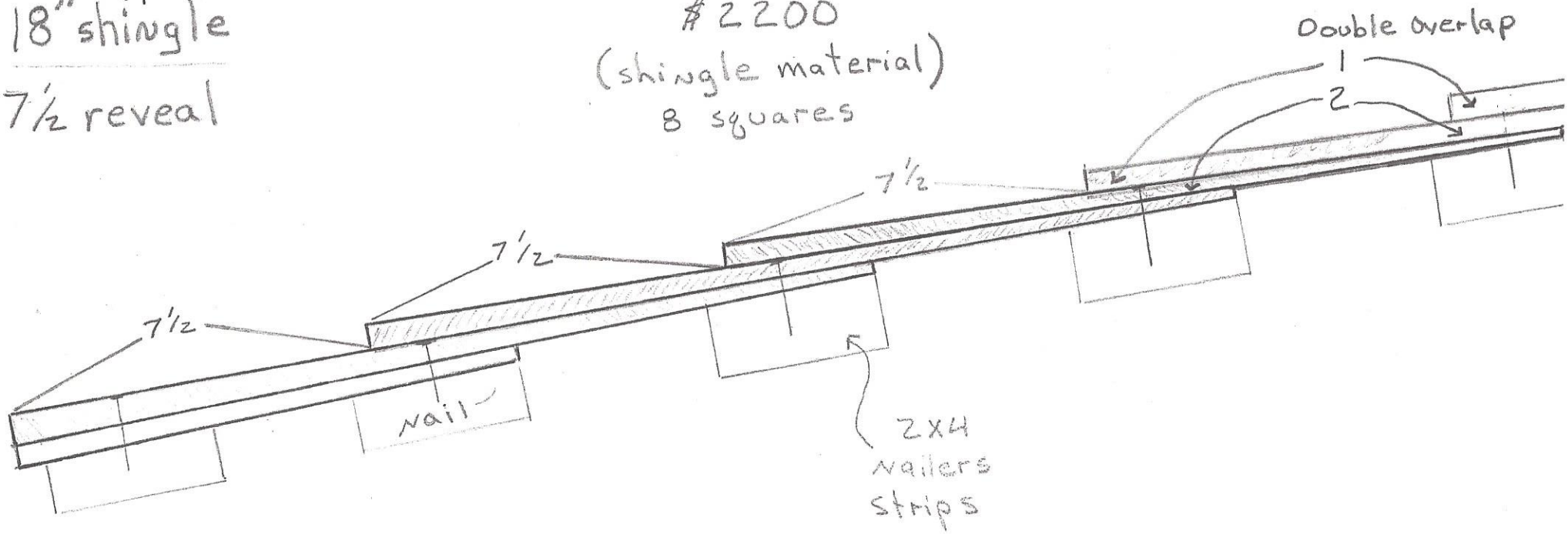

Option 2

24" shingle

7½" reveal

$ 3250

(shingle material)

10 squares

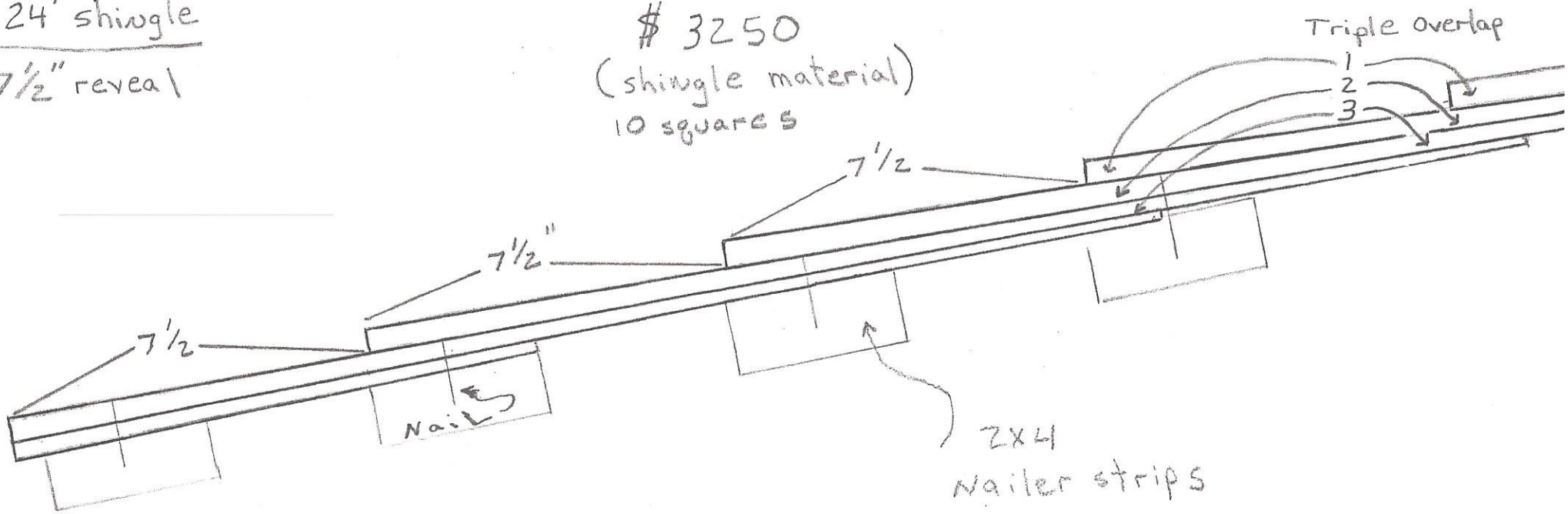

(Hernig proposal)

TOWN OF WAXHAW

P.O. Box 6
1150 North Broome Street Waxhaw, N.C. 28173
Telephone (704) 843-2195 Fax (704) 843-2196
www.waxhaw.com

Hours: Monday-Friday 8:00 a.m. to 5:00 p.m.

MAYOR
DAUNE GARDNER

TOWN COMMISSIONERS
MICHAEL STEWART (MAYOR PRO TEM)
PAUL FITZGERALD
JOHN HUNT
STEVE MAHER
JAMES WARNER

INTERIM TOWN MANAGER
GREG MAHAR

TOWN CLERK
MELODY SHULER

March 3, 2015

Madam Mayor and Town Commissioners,

Preparation efforts for the installation of our park surveillance cameras are under-way. Prior to going live, it would be prudent to formalize a Town policy regarding surveillance. The Town IT Manager and I collaborated on a simple policy to capture the expanded uses we are experiencing and expect to see, moving forward. The Town Attorney assisted in streamlining. The policy has been reviewed by our Chief of Police and Town Attorney and it was found to be consistent with the law.

The use of surveillance cameras requires that we understand how their data fits within the context of public record requirements. There is a public records exemption for law enforcement data. If used solely for law enforcement, there may be no duty to provide coverage to the public. Park cameras, however, can assist us in identifying safety hazards, maintenance needs, volume of usage and more. Parks and Recreation usage falls outside of law enforcement. As a result, we must simply be aware that there is a requirement to keep data for 30 days, after which, that data can be disposed of. In addition to that point, non-police related footage can be requested by citizens, with public records requirements applying.

This letter serves as a request for your approval of this policy. We understand that as we grow, the scope of this policy may extend as well. We are happy to make updates and seek your subsequent approval as needed. Thank you for your consideration!

Sincerely,

Natalie L.K. Jackson
Director of Parks & Recreation

Video Surveillance System Policy for the Town of Waxhaw

Purpose

The Town of Waxhaw makes limited use of video surveillance systems on its properties. Video surveillance systems are primarily used to provide surveillance at building entrances, lobbies, parking lots, streets, parks and where equipment may be stored. The primary purpose of the video surveillance system is to assist with the forensic investigation of crimes committed on Town property.

The video surveillance system is not intended to be used as a method of tracking the work habits or productivity of individual employees or town patrons. Video surveillance cameras are generally not used to observe employee work areas and are never used in areas where employees would have an expectation of privacy, such as restrooms or locker rooms.

Management of Video Surveillance Systems

The Town of Waxhaw IT & Police Departments are responsible for the management of all video surveillance systems used at the town. The Parks & Recreation Department will maintain access to park specific video camera coverage. Other departments may have access, as granted by the Town Manager, but shall not install a video surveillance system without the knowledge and approval of the IT & Police Departments. In particular, the use of covert camera systems must first be approved by both the Town of Waxhaw IT, Police, and Legal Departments.

Video Surveillance Monitoring

The video surveillance systems are capable of being monitored from police vehicles and computer systems located at the Police Department and within other approved Town departments. Town staff members generally view video surveillance cameras on a periodic basis or in response to a specific incident. Because of the many responsibilities of the Town staff and officers, the video surveillance system is not monitored on a continuous basis.

Video Surveillance Recording

All video surveillance cameras are capable of continuous recording via a digital video recording system.

The Town of Waxhaw IT Department and Police Department are responsible for the management of the video surveillance system and will assist with requests for access to video files, using the state of North Carolina's records retention requirements and applicable statutes as their guidance.

In the event that a crime or incident occurs, the public or employees should report the incident to the Waxhaw Police Department. If the event occurred in an area where video surveillance

coverage is available, the Town may review the recorded video and make a determination as to whether there is any video relevant to the incident. This video will be used by Waxhaw's law enforcement officers to investigate and resolve the reported security incident.

All requests for video recordings, by law enforcement agencies, shall be coordinated through the Waxhaw Police Department.

Recorded video will be stored for a period of thirty days. Any video associated with a major security incident or event during this time period is generally converted into a permanent video clip and stored according to state regulations.

Limitations of Video Surveillance Systems

Employees should be aware that a security officer is not watching most cameras most of the time and employees should not have an expectation that they are under continuous surveillance when they are in the range of a camera. For example, employees walking to their car late at night should call for an escort rather than assume that they are already being watched by a security officer using a camera.

Employees should also be aware that the video surveillance system has cameras that cover only a small fraction of Waxhaw properties, and even when camera coverage exists, it may not provide the level of detail necessary to spot suspicious activity or identify criminals.

TOWN OF WAXHAW

P.O. Box 6
1150 North Broome Street Waxhaw, N.C. 28173
Telephone (704) 843-2195 Fax (704) 843-2196
www.waxhaw.com

Hours: Monday-Friday 8:00 a.m. to 5:00 p.m.

MAYOR
DAUNE GARDNER

TOWN COMMISSIONERS
MICHAEL STEWART (MAYOR PRO TEM)
PAUL FITZGERALD
JOHN HUNT
STEVE MAHER
JAMES WARNER

INTERIM TOWN MANAGER
GREG MAHAR

TOWN CLERK
MELODY SHULER

March 3, 2015

Madam Mayor and Town Commissioners,

Our downtown parks are adorned with beautiful trees however, some trees currently pose safety concerns. Our County Arborist has mentioned before that should a tree pose a safety risk, there is justification for removal. The Director of Public Services and I agree that there are trees warranting removal in both the David G. Barnes Park and Waxhaw Sk8 Park.

Attached, you will find a depiction of issues we are experiencing with regard to trees, power-lines and debris. Ahead of spring, we would like to remove or modify trees that are currently growing into power lines. We would also like to remove trees that drop significant debris on the Sk8 Park surface. This debris catches in skateboard wheels and poses a safety concern.

I wanted to make you aware of our desire to increase safety by addressing risks posed by trees in our downtown parks. In closing, I would like to make note of two important points. If our Public Services team can safely retain a tree via limbing, in the David G. Barnes Park, we will try to keep it. Trees set for removal in the Waxhaw Sk8 Park do not provide meaningful amounts of shade and have been recommended for removal by the Sk8 Park designer as well as the Public Services Director, both of whom I concur with. I am happy to answer any questions you may have.

Approval of this memorandum, on the consent agenda, will act as permission to address tree issues in our downtown parks.

Sincerely,

Natalie L.K. Jackson
Director of Parks & Recreation

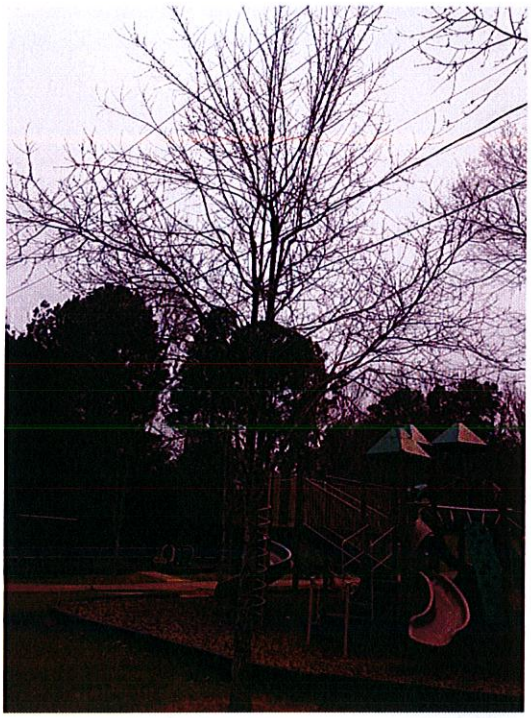

David G. Barnes

Park

Power Lines

Safety Issue

Tree Debris on Surface

Not a Meaningful Source of Shade

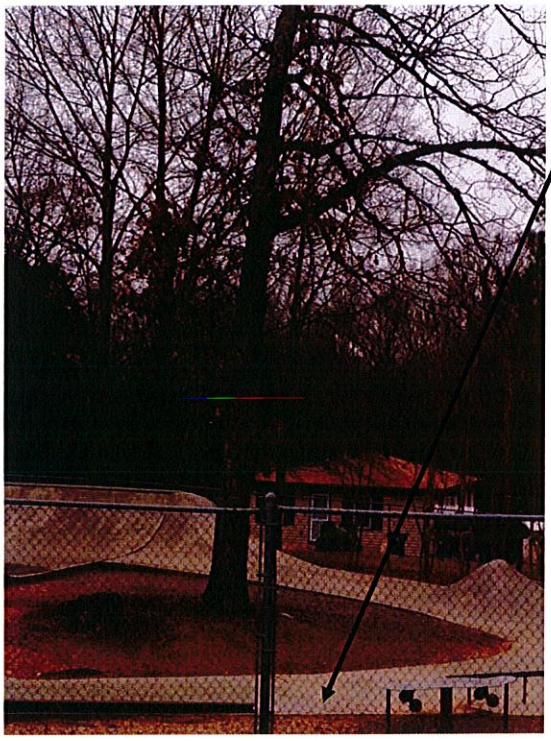

Sk8 Park

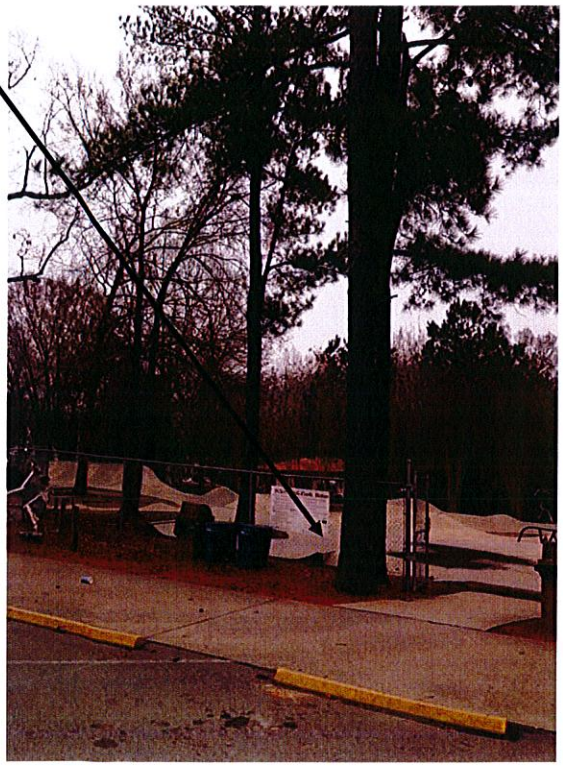

STAFF REQUEST TO PLACE ITEM ON BOARD AGENDA

Date of Meeting: March 10, 2015

Department Requesting: Planning and Community Development

Staff Member Requesting: Lisa McCarter

Case #: RZ-003080-2015

Brief Summary of the item:

Petition RZ-003035-2014 is a request by McCray Smith, on behalf of Cray, Inc., for a rezoning/map amendment on parcel 06-138-001 from R4 (Single-family Residential) to C1 (Neighborhood Commercial) located at 3808 S. Providence Road.

Attachments Included:

- Application Packet
- Aerial Map
- Current Zoning Map
- Future Land Use Map
- Proposed Zoning Map
- Staff Report
- Zoning Use Table from the Unified Development Ordinance
-
-
-

Date submitted to Town Clerk: 2/27/2015

Town of Waxhaw
Planning & Community Development
PO Box 617
Waxhaw, NC 28173
704-843-2195 (Phone)
704-243-3276 (Fax)
www.waxhaw.com

Date Received: 1-21-2015
Received By: DC
Fee: 330.00

ZONING CHANGE APPLICATION

Application Number: RZ-0030802015 Date of Application: 21 JAN 15

Applicant Information

Applicant Name: CRAY, INC. / McCRAY SMITH

Applicant Mailing Address: 120 SOUTHCLIFF DRIVE

Applicant Telephone: 704-219-2230

Property Owner Name: CRAY, INC.

Property Owner Mailing Address: P.O. BOX 1315
WAXHAW NC 28173

Property Owner Telephone: 704-219-2230

Relationship of Applicant to Property Owner: SAME

Subject Property Information

Property Location: 3808 S. PROVIDENCE RD.

Tax Map and Parcel Number(s): 06139001

Existing Zoning: # R-4 In Flood Area? NO

Requested Zoning District: # C1 Acreage 0.91 AC.

Current Use of Land: RESIDENTIAL

Surrounding Land Uses: MIXED: C1, R-4, R-3

Comments: BUSY PROVIDENCE RD. IS MAIN THROROUGHFARE IN & OUT OF WAXHAW, PERFECT FOR COMM. USES.

No application will be considered complete unless it has been properly completed and submitted to the Zoning Administrator by the deadline for the Planning Board Meeting.

To the best of my knowledge, all of the information herein submitted is accurate and complete.

(Signature of Property Owner) 21 JAN 15 (Date)

(Signature of Applicant) 21 JAN 15 (Date)

All of the information herein required has been submitted by the applicant and is included or attached with this application.

Lori Oakley (Signature of Zoning Administrator) 1-21-15 (Date)

TO BE FILLED OUT BY ZONING ADMINISTRATOR

Completed application submitted on: 1-21-2015

Reviewed by Planning Board on: 2-16-2015

Action of Planning Board: unanimous unfavorable recommendation (7-0). Reasons: traffic concerns for the intersection; not in keeping with the Highway 16 Plan; driveway access on Hwy 16; can be any use allowed in C1 and, therefore, would not protect the neighborhood.

Town Board Public Hearing Held On: _____

Date of Town Board Decision: _____

Action Taken by Town Board: _____

Newspaper Affidavit should be attached

Public Hearing Notice Filed in (Newspaper): _____

Date(s) Notices Published: _____

Notification to adjacent property owners mailed on: _____

Property Posting Date: _____

SUBJECT PROPERTY:

06138001 Cray Inc., P.O. Box 1315, Waxhaw, NC 28173

ADJACENT PROPERTIES:

06141001 Providence at 16, LLC, 2800 Sturgis Rd., Oxnard CA 93030

06138018 Castora Real Estate Group, Inc., 601 Birchwood Drive, Waxhaw NC 28173

06168001K The North Carolina LLP, Invitation Homes, 901 Main St., Suite 4700, Dallas Tx 75202

06138002 Belynda Gordon Greene, James Donald Gordon, 246 Alexandria Rd., Sedona AZ 86336

06138003 Robert Neil Gordon, 3750 S Providence Rd., Waxhaw NC 28173

EXHIBIT "A"

LEGAL DESCRIPTION
~ 3808 S. PROVIDENCE RD.

BEGINNING at a point on the western right of way line of N.C. Highway 16, said point being a southeastern corner of Hallis Gordon property (Deed Book 138 page 297), now or formerly, and runs thence with the right of way line of said highway, South 16-15-08 East 138.62 feet to an iron; thence South 74-55-00 West 256.64 feet to an iron; thence North 14-59-45 West 138.98 feet to an iron in the old line; thence North 75-00-15 East 253.60 feet to the point of Beginning and containing .81 of an acre as surveyed by J.B. Fisher Surveyors on October 28, 1993.

I CERTIFY THAT THIS MAP WAS DRAWN UNDER MY SUPERVISION FROM AN ACTUAL SURVEY MADE UNDER MY SUPERVISION (DEED RECORDED IN BOOK 166, PAGE 276; THAT THE BOUNDARIES NOT SURVEYED ARE INDICATED AS DRAWN FROM INFORMATION AS SHOWN ON PLAT; THAT THE RATIO OF PRECISION OR POSITIONAL ACCURACY IS 1:10,000+; AND THAT THIS MAP MEETS THE REQUIREMENTS OF THE STANDARDS OF PRACTICE FOR LAND SURVEYING IN NORTH CAROLINA (21 NCAC 56. 1600). THIS 13th DAY OF MAY, 2013.

SIGNED _____
JOHN D. SKIDMORE III, NCPLS L-3837

NORTH CAROLINA PROFESSIONAL SEAL L-3837 LAND SURVEYOR JOHN D. SKIDMORE III

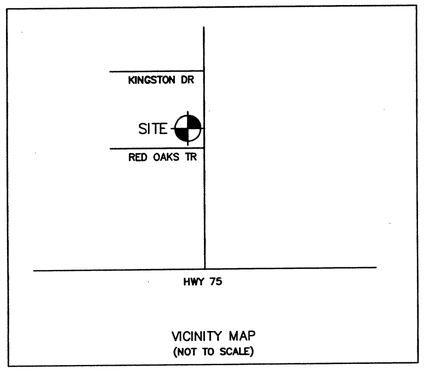

VICINITY MAP
(NOT TO SCALE)

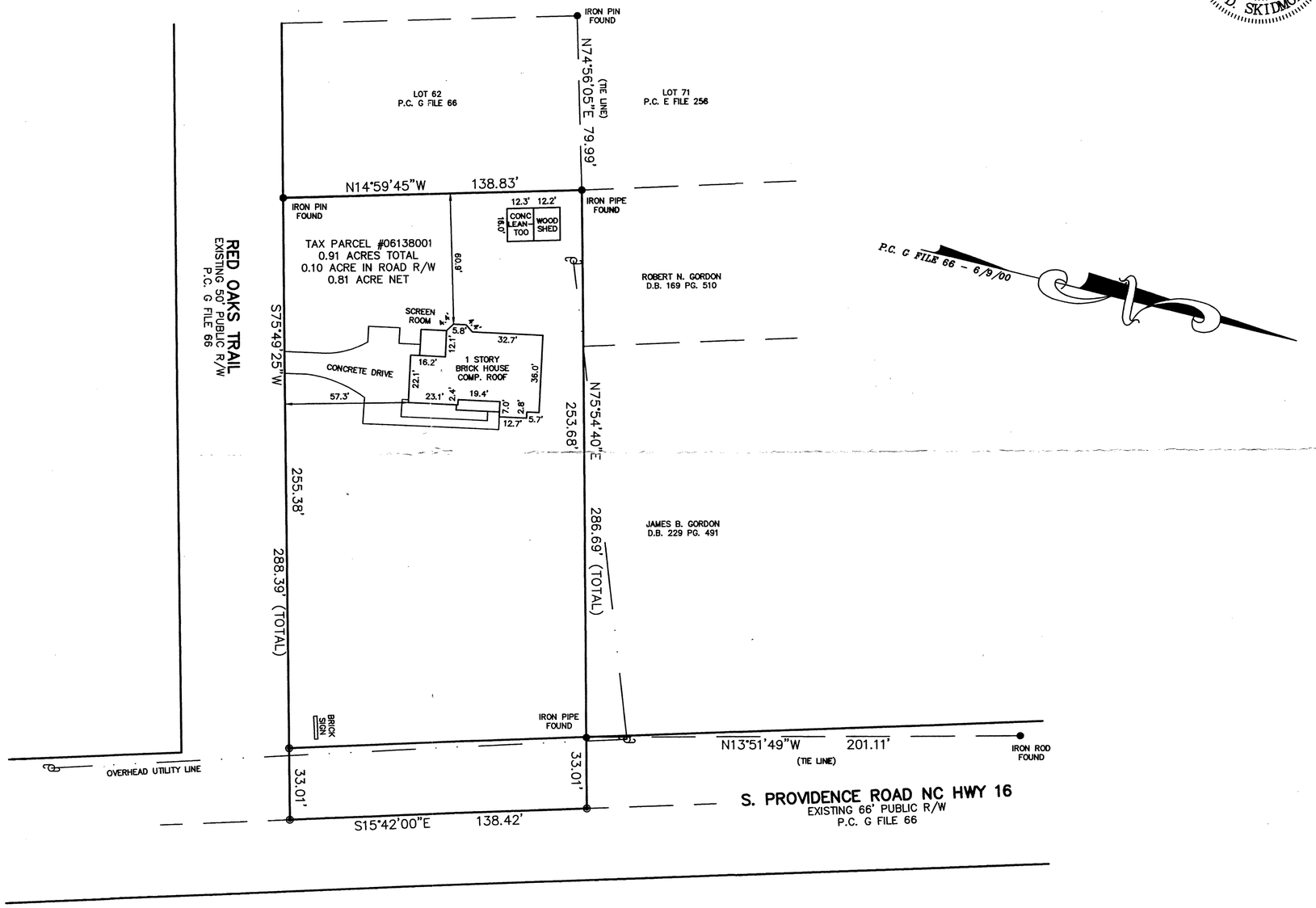

LEGEND
R/W = RIGHT OF WAY
● = CORNER AS DESCRIBED
☼ = LIGHT POLE
◉ = COMPUTED POINT
= UTILITY POLE
⊡ = CONCRETE MONUMENT
Ⓢ = SANITARY SEWER MANHOLE
Ⓓ = STORM DRAIN MANHOLE

PROPERTY LINE
ADJOINER LINE
RIGHT OF WAY
TIE LINE
STORM DRAIN EASEMENT
SETBACK LINE

GRAPHIC SCALE

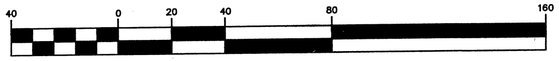

(IN FEET)
1 inch = 40 ft.

NOTES:
- AREA BY COORDINATE METHOD
- THIS IS A SURVEY OF AN EXISTING PARCEL OR PARCELS OF LAND AND DOES NOT CREATE A NEW STREET OR CHANGE AN EXISTING STREET
- THIS MAP IS NOT INTENDED TO MEET G.S. 47-30 AND IS NOT TO BE RECORDED AS A PLAT
- SUBJECT PROPERTY MAY BE SUBJECT TO RECORDED OR UNRECORDED EASEMENTS, RIGHT OF WAYS, SETBACKS AND/OR RESTRICTIVE COVENANTS NOT SHOWN HEREON

PHYSICAL SURVEY	SURVEY DATE 5/09/2013	SURVEY DATE 5/6/13
3808 S. PROVIDENCE ROAD 0.91 ACRE TAX PARCEL 06138001 WAXHAW, UNION COUNTY, NORTH CAROLINA	TAX No. 06138001	DRAWN BY: CGS
	D.B. 166 PAGE 276	DRAWING 13-078.DWG
TO BE DEEDED TO: McCRAY SMITH	*SKIDMORE SURVEYING, INC.* 5343 HIGHWAY 74 WEST MONROE, N.C. 704-289-4855	

RZ-003080-2015
3808 S. Providence Rd. Rezoning
Aerial Map

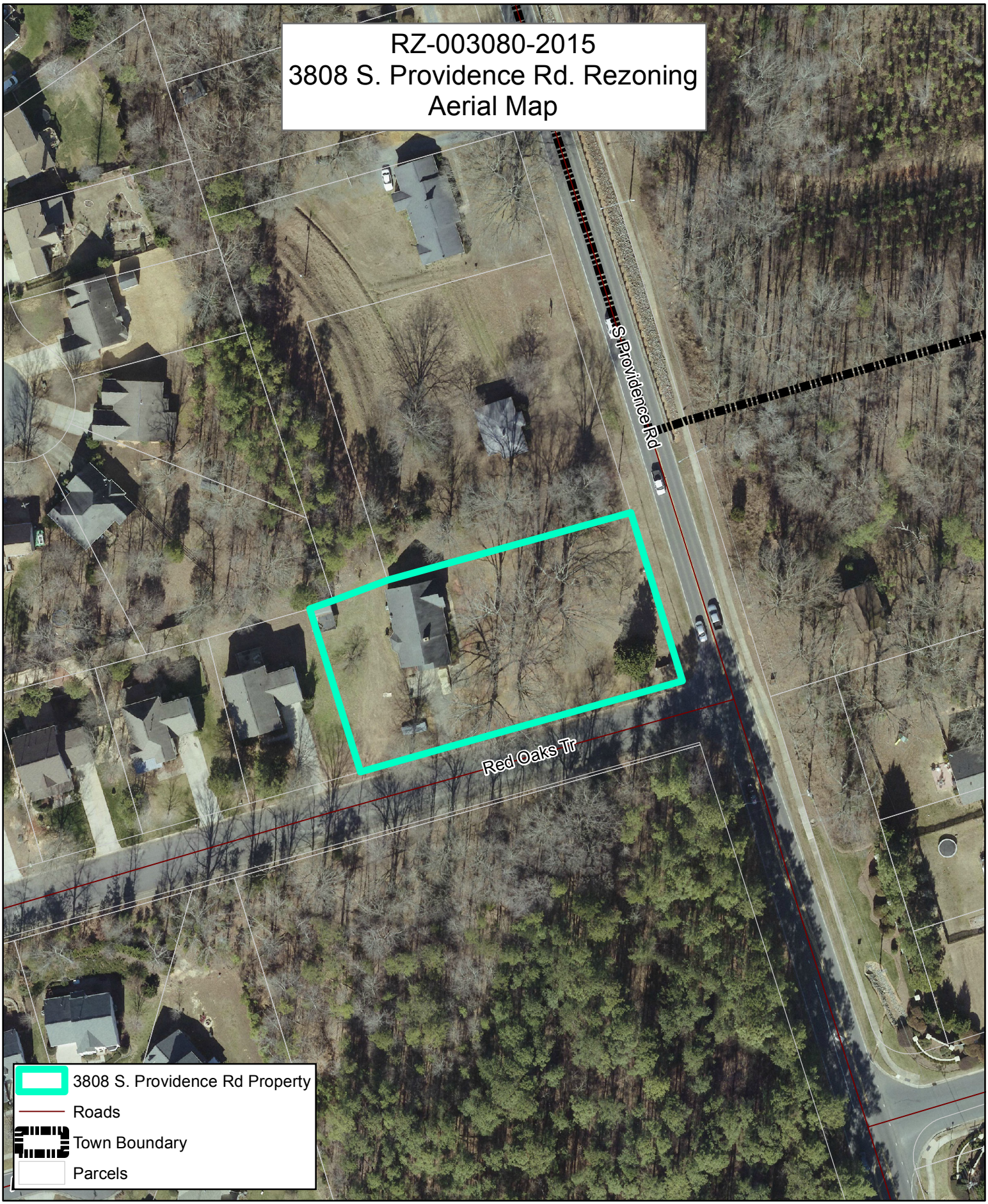

N

0 25 50 100 150 200 Feet

Data Source & Disclaimer

Data provided by Union County GIS and Town of Waxhaw GIS. The Town of Waxhaw does not guarantee the accuracy of the information displayed. Map created February 2015.

RZ-003080-2015
3808 S. Providence Rd. Rezoning
Current Zoning Map

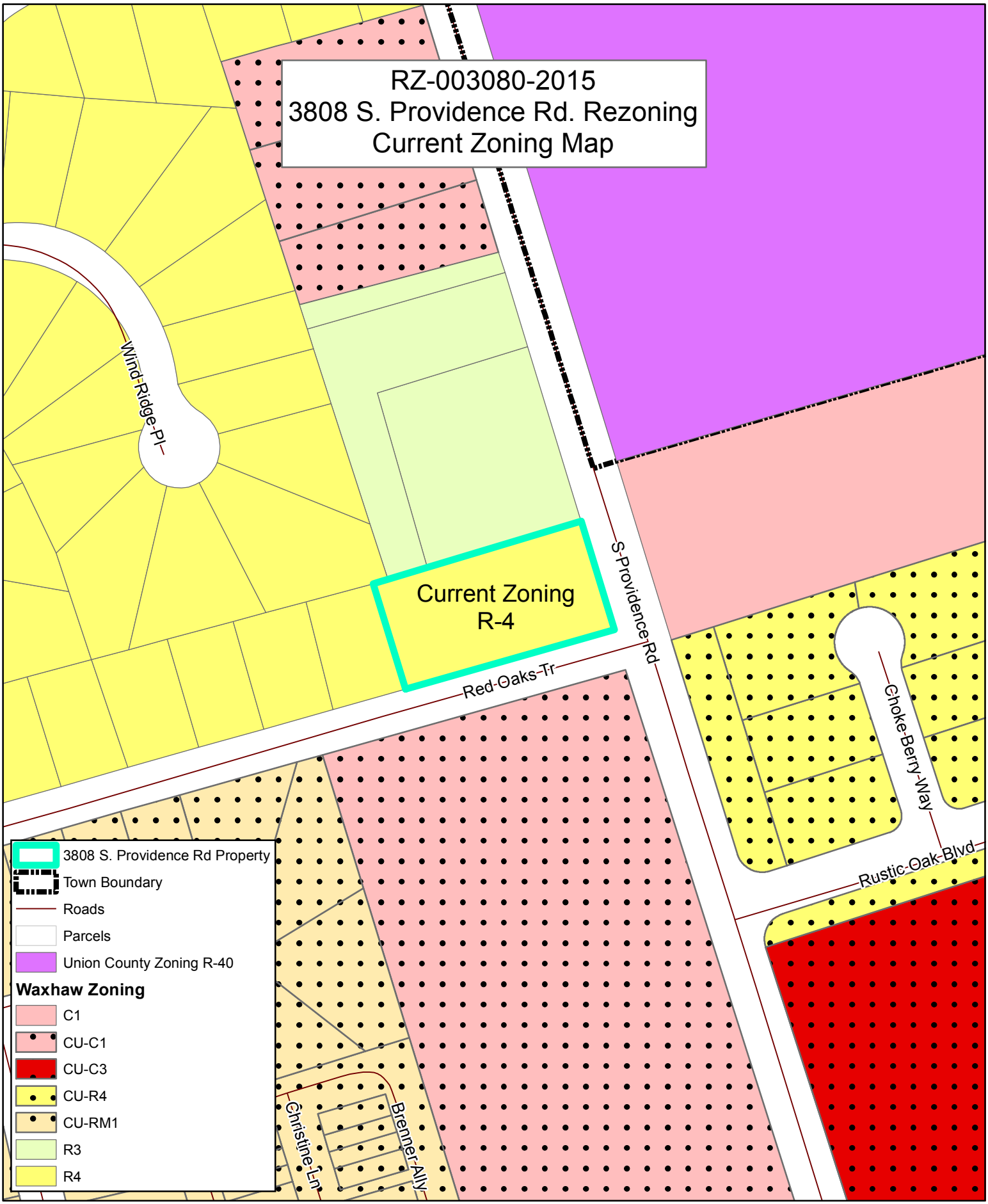

N

0 45 90 180 270 360 Feet

Data Source & Disclaimer

Data provided by Union County GIS and Town of Waxhaw GIS. The Town of Waxhaw does not guarantee the accuracy of the information displayed. Map created February 2015.

RZ-003080-2015
3808 S. Providence Rd. Rezoning
Future Land Use Map

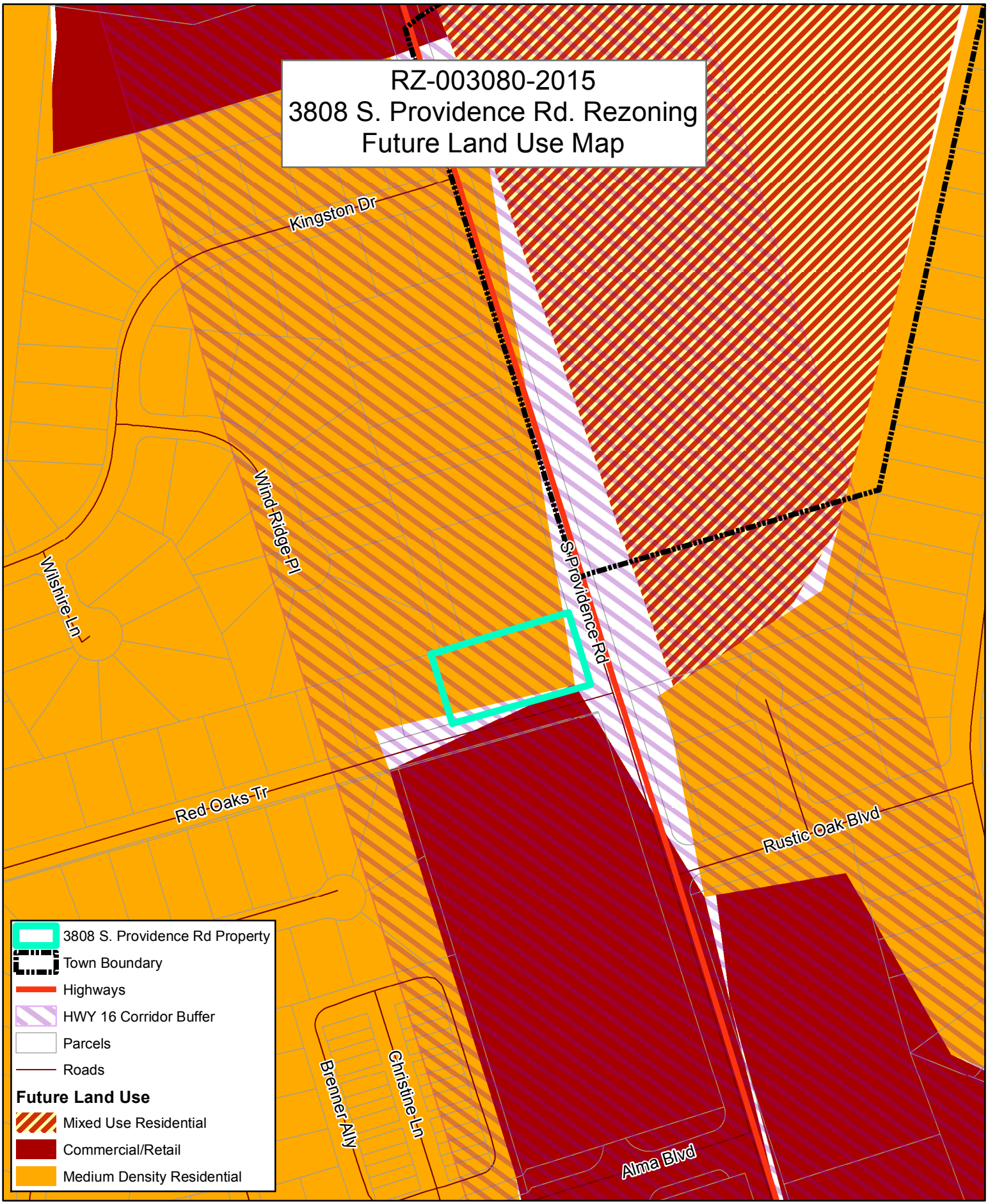

N

0 65 130 260 390 520 Feet

Data Source & Disclaimer

Data provided by Union County GIS and Town of Waxhaw GIS. The Town of Waxhaw does not guarantee the accuracy of the information displayed. Map created February 2015.

RZ-003080-2015
3808 S. Providence Rd. Rezoning
Proposed Zoning Map

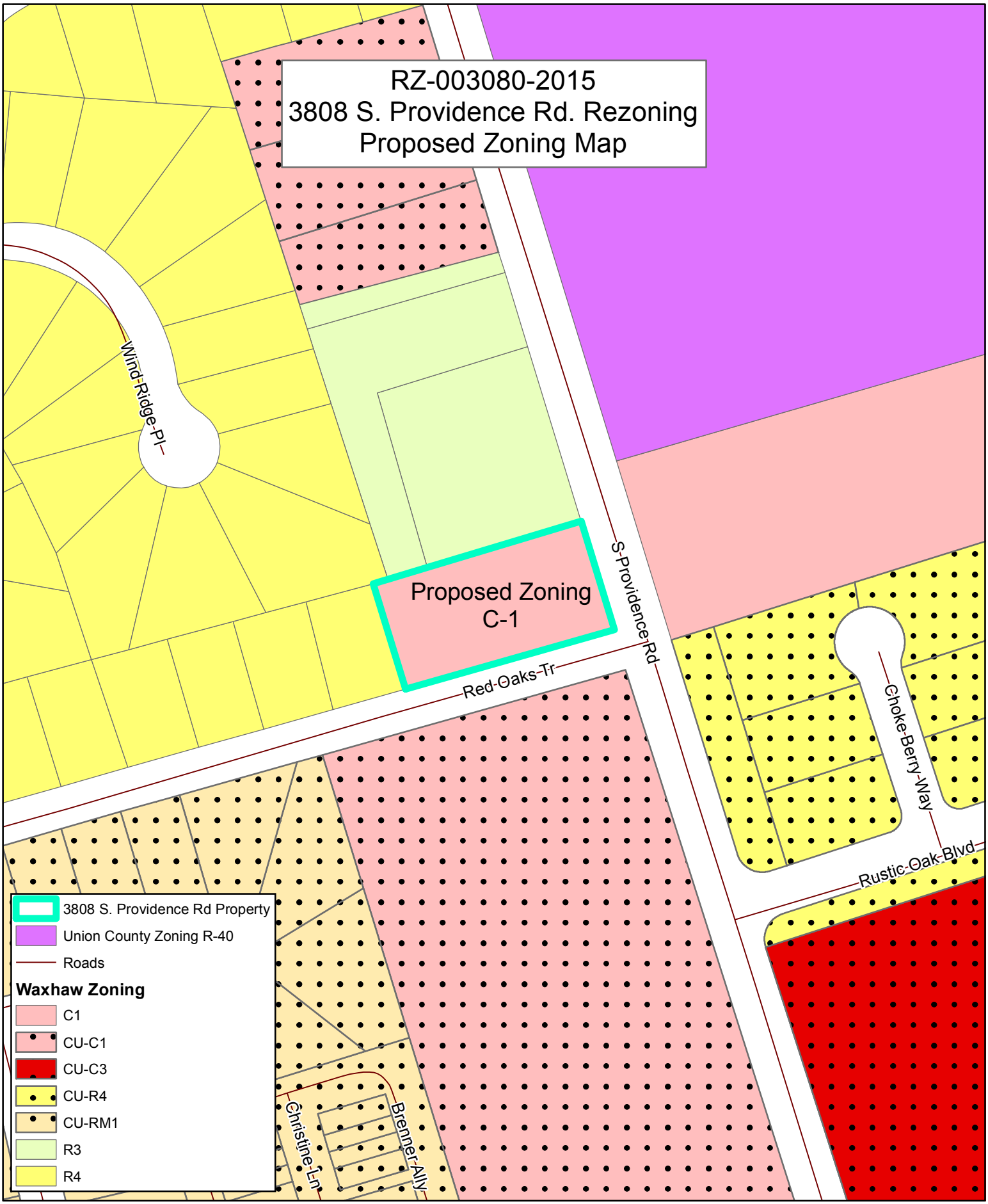

N

0 45 90 180 270 360 Feet

Data Source & Disclaimer

Data provided by Union County GIS and Town of Waxhaw GIS. The Town of Waxhaw does not guarantee the accuracy of the information displayed. Map created February 2015.

Rezoning Petition RZ-003080-2015
3808 Providence Road South

EXPLANATION OF THE REQUEST

Petition RZ-003080-2015 is a request by McCray Smith, on behalf of Cray, Inc., for a rezoning/map amendment on parcel 06-138-001 from R4 (Single-family Residential) to C1 (Neighborhood Commercial) located at 3808 S. Providence Road.

LOCATION AND CURRENT LAND USE

The property is located at 3808 S. Providence Road and has frontage on S. Providence Road and Red Oaks Trail. The property currently has a single-family residence located on it. The property is 0.91 acres in size.

- Condition and land use of the surrounding properties. The adjoining properties are:
  - To the north – Two single-family residences along S. Providence Road zoned R3 (Single-family Residential) and one single-family residence located in the Kingston on Providence subdivision zoned R4 (Single-family Residential).
  - To the east – Across S. Providence Road is a vacant wooded parcel zoned C1 (Neighborhood Commercial).
  - To the south – Across Red Oaks Trail is a vacant wooded parcel zoned CU-C1 (Conditional Use Neighborhood Commercial).
  - To the west – A single-family residence that is part of The Oaks on Providence subdivision zoned R4 (Single-family Residential).

EXISTING ZONING & LAND USE

The subject property is zoned R4 (Single-family Residential). According to Section 4.1.4 of the UDO (Unified Development Ordinance):

"The purpose of the R-4, Single Family Residential District is to provide for the residential use of land developed in a high density pattern. The principal structure of the R-4 zoning district is the single-family detached dwelling."

According to Section 11 of the UDO the minimum lot size in the R4 zoning district is 12,000 sq. ft.

2030 COMPREHENSIVE PLAN / FUTURE LAND USE MAP / HIGHWAY 16 CORRIDOR PLAN

The Future Land Use Map from the 2030 Comprehensive Plan shows the property as Medium Density Residential and within the Providence Road Corridor Buffer which are described in the plan as follows:

> **"Medium Density Residential.** These areas include existing and future areas for development of more dense residential neighborhoods that provide a diversity of housing types and housing options. Areas include single-family detached units, mobile homes, townhouses, duplexes, condominiums, apartments, senior housing, and other multi-family dwelling units, depending upon the character of existing neighborhoods. Housing densities should range from 3-8 dwelling units per acre. Other types of uses that may

occur are schools, parks, and some neighborhood commercial uses, such as coffee shops and small corner grocery stores."

"Providence Road Corridor. This classification designates a corridor along Providence Road (NC-16) - the primary road corridor through Waxhaw - that has been identified for additional planning. A plan for this corridor should include recommendations for specific design standards, such as building orientation, location and amount of parking, pedestrian and bicycle facilities, signage, and architectural requirements. Standards should also address transportation design, such as access management."

The Providence Road Corridor calls for further planning as was recently completed in the adoption of the Highway 16 Corridor Plan. The regulating plan from the Highway 16 Corridor Plan for this property calls for NMX (Neighborhood Mixed Use) which is described in in Section 4.1.17.B as:

"Neighborhood Mixed Use (NMX): The Neighborhood Mixed Use District consists of higher density, mixed use buildings that accommodate retail, offices, townhouses and apartments. It has a tight network of streets, with wide sidewalks, steady street tree planting and buildings set close to the sidewalks."

PLANNING STAFF ANALYSIS

The property is currently single-family residential and adjacent to single-family residential properties. There is C1 and CU-C1 zoning across S. Providence Road and Red Oaks Trail respectively, however they are not immediately adjacent to the property and they remain vacant and undeveloped.

The Future Land Use Map in the 2030 Comprehensive Plan calls for Medium Density Residential and the property is located within the Providence Road Corridor. Medium Density Residential allows some neighborhood commercial uses, including coffee shops and small corner grocery stores which is in keeping with the requested C1 (Neighborhood Commercial) zoning district. The Providence Road Corridor states that further study is needed and this was achieved with the adoption of the Highway 16 Corridor Plan. The regulating plan contained in the Highway 16 Corridor Plan depicts the property as NMX zoning, which is in keeping with the C1 zoning district.

PLANNING STAFF RECOMMENDATION

The requested rezoning is in keeping with the 2030 Comprehensive Plan and Future Land Use Map and the Highway 16 Corridor Plan. This rezoning is a general rezoning request to C1 (Neighborhood Commercial), and therefore, no conditions can be placed on the approval and any use allowed in C1 could be placed on this parcel. A Zoning Table of Uses from the UDO is attached for your reference to see the uses that are allowed in the C1 zoning district.

The applicant has indicated to staff that the property would be used for an office if the general rezoning is approved, however, since this is a general rezoning request, the applicant could use the site for any use allowed in C1. Staff feels that some uses in the C1 zoning district may not be suitable for this property. Since this property is immediately adjacent to single-family residential properties and is under an acre, staff recommends that a Conditional District Rezoning would be more appropriate for the property. With a Conditional District Rezoning, conditions could be imposed by the Board of Commissioners and uses could be limited to those sensitive to the neighboring residential properties.

Staff does not recommend approval of the proposed rezoning RZ-003080-2015. However, given the recommendations of the 2030 Comprehensive Plan and associated Future Land Use Plan as well as the Highway 16 Corridor Plan, staff feels that a Conditional District Rezoning with limited uses and conditions that are sensitive to the surrounding single-family residential properties might be appropriate.

PLANNING BOARD RECOMMENDATION

The Planning Board, at their special February, 23, 2015 meeting, voted unanimously (7-0) to send an unfavorable recommendation on RZ-003080-2015 to the Board of Commissioners. The Planning Board stated the following reasons for the unfavorable recommendation: traffic concerns for the intersection; not in keeping with the Highway 16 Corridor Plan; driveway access on Providence Road; and that it could be any use allowed in C1 and, therefore, would not protect the neighborhood.

STATEMENT OF REASONABLENESS AND CONSISTENCY

The proposed zoning of this parcel appears to (not) be reasonable at this time. It also is (in)consistent with the future planning goals of the Town of Waxhaw.

Submitted By: Lisa McCarter

Zoning Table of Uses (Amended 7-22-14)*

USE	SUPPLEMENTAL REGULATIONS	R-1	R-2	R-3	R-4	RM-1	RM-2	OIS	C-1	C-2	C-3	C-4	I-1	I-2
ABC Store											X			
Accessory Structure (accessory to principal use)	9.20, 11.3.80	XS	XS	XS	XS	XS	XS	XS	XS	XS	XS	XS	XS	XS
Adult Care Center (See Day Care Center)														
Adult Establishment	11.3.1													CS
Air Conditioning Supply and Service (See Electric, Heating,...Supplies and Sales)														
Amusement Park (Outdoors)	11.3.2										CS		CS	CS
Animal Grooming Establishment	11.3.3									CS	CS	CS	CS	XS
Animal Hospital (no outdoor runs)	11.3.4								XS	XS	XS		XS	XS
Animal Hospital (with outdoor runs)	11.3.4									CS	CS		CS	XS
Animal Kennel	11.3.4									CS			CS	CS
Animal Shelter	11.3.4													CS
Animal Supply Store									X	X	X	X	X	X
Antique Store								X	X	X	X	X		
Apparel Store (See Clothing, Footwear, and Apparel Store)														
Appliance Sales and Repair (Indoor Storage)									X	X	X	C		
Appliance Sales and Repair (Outdoor Storage)	11.3.5													CS
Art Gallery								X	X	X	X	X		
Art Supply Store								X	X	X	X	X		
Auditorium, Assembly Hall as the principal use											C	C	C	C
Auto, Truck, Boat, Motorcycle Sales	11.3.22, 11.3.44										CS		CS	XS
Automobile Body Shop	11.3.6, 11.3.22												CS	XS
Automobile Broker										C			X	X
Automobile Club								X	X	X	X	X		
Automobile Detailing Shops	11.3.7, 11.3.22										CS	C	XS	XS
Automobile Parking Lot and Structures (Principal Use)									X	X	X	C	X	
Automobile Parts and Repair Store	11.3.6												XS	X
Automobile Parts and Supply Store	11.3.8									XS	XS	XS	XS	XS
Automobile Repair Shop	11.3.6, 11.3.22										CS	C	CS	CS
Automobile Salvage Yards (See Junkyard and Automobile Salvage)														
Automobile Service Station	11.3.9, 11.3.22									CS	CS	C		
Automobile Towing and Wrecker Service	11.3.22												CS	XS
Automobile Wash (Self-Serve)	11.3.10									CS	CS		CS	XS
Automobile Wash (Automatic)	11.3.11, 11.3.22									CS	CS		CS	XS
Bait & Tackle Shop										X	X			

NOTES
X - Permitted Use
XS - Permitted Use With Supp. Regs.
C - Conditional Use
CS - Conditional Use With Supp. Regs.
* Reference Sect. 21 Downtown
** No designation indicates use is not permitted **

Zoning Table of Uses (Amended 7-22-14)*

USE	SUPPLEMENTAL REGULATIONS	R-1	R-2	R-3	R-4	RM-1	RM-2	OIS	C-1	C-2	C-3	C-4	I-1	I-2
Bakery (Retail)	11.3.67								XS	XS	XS	XS	XS	XS
Banks, Savings and Loan, Credit Union (See Financial Institution)														
Bank Teller Machines, Outdoor (Principal or Accessory Use)	11.3.22, 11.3.78								XS	XS	XS	XS		
Barn, Horse	11.3.14	CS	CS	CS	CS									
Barber/Beauty Shop	11.3.13							XS	X	X	X	X		
Beauty Supply and Cosmetics Store									X	X	X	X		
Bed and Breakfast Inn	11.3.15	CS	CS	CS	CS	CS	CS	XS	XS	XS	XS	CS		
Bicycle Sales/Service	11.3.22								CS	XS	XS	XS		
Billiard Parlor (See Pool Hall)														
Blueprint and Drafting Service									X	X	X	X		
Boat Sales (See Auto, Truck, Boat...Sales)														
Book Store									X	X	X	X		
Bowling Lanes											C		X	X
Building and Home Materials Center	11.3.16, 11.3.22										CS		XS	
Bus Passenger Station	11.3.22									XS	XS			
Cabinet and Woodwork Shops	11.3.67											XS	XS	XS
Camera and Photography Supply Store									X	X	X	X		
Camping and Recreational Vehicle Park	11.3.17, 11.3.22												CS	CS
Candy and Nut Store								C	X	X	X	X		
Car Wash (See Automobile Wash)														
Card Shop (See Gift, Novelty, and Souvenir Shop)														
Carpet Store (See Floor Covering Store)														
Catalogue Sales Store									X	X	X			
Catering Establishment								X	X	X	X	X		
Cemetery/Columbarium (Accessory Use)	11.3.18	XS	XS	XS	XS	XS	XS	XS	XS	XS	XS			
Cemetery/Columbarium (Principal Use)	11.3.18	XS	XS	XS	XS	XS	XS	XS	XS	XS	XS			
Child (day) Care Facilities (see Day Care Center)														
China and Tableware Shop								X	X	X	X	X		
Church/House of Worship	11.3.19	XS	XS	XS	XS	XS	XS	XS	XS	XS	XS	XS		
Circuses, carnivals, exhibit shows, trade shows, races, stage shows, religious events, arts and crafts shows, etc.	11.3.22										CS	CS	CS	CS
Cleaning and Maintenance Service, Building											X		X	X
Clock and Watch Sales and Repair Shop								X	X	X	X	X		
Cloth Store (See Sewing, Cloth, and Notions Store)														
Clothing, Footwear, and Apparel Store								X	X	X	X	X		

NOTES
X - Permitted Use
XS - Permitted Use With Supp. Regs.
C - Conditional Use
CS - Conditional Use With Supp. Regs.
* Reference Sect. 21 Downtown
** No designation indicates use is not permitted **

Zoning Table of Uses (Amended 7-22-14)*

USE	SUPPLEMENTAL REGULATIONS	R-1	R-2	R-3	R-4	RM-1	RM-2	OIS	C-1	C-2	C-3	C-4	I-1	I-2
Clubs, Entertainment	11.3.22										CS		CS	
Coin and Stamp Shop								X	X	X	X	X		
Cold Storage Plants													C	C
College/University											C		X	X
Commercial Vehicle Storage and/or Operations Center	11.3.68													CS
Community Center	11.3.20								CS	CS	XS	XS		
Community Garden	11.3.82	XS	XS	XS	XS	XS		XS	XS	XS	XS	XS	XS	XS
Computer and Data Processing Sales and Service							XS			X	X	C		
Computer Store (See Office Equipment and Computer Store														
Conference / Convention Center										C	C		C	C
Consignment Shop (See Second Hand and Consignment Shops														
Continuing Care Facility	11.3.23					CS		XS	XS	XS	XS			
Contractor's Office (no outside storage)							CS		X	X	X	X		
Contractors' Storage and Equipment Yard	11.3.22, 11.3.24													C S
Convenience Store (With Retail Fuel Sales)	11.3.22, 11.3.25									CS	CS	CS		
Convenience Store (Without Retail Fuel Sales)	11.3.25								CS	CS	CS	CS		
Copying Service (See Photocopying Service)														
Correctional Facility, Jails, Penal Institutions	11.3.26													CS
Cosmetics Store (See Beauty Supply and Cosmetics Store)														
Costume Rental Store (See Formal Wear and Costume Rental Store)														
Country Club		C	C	C	C	C				C	C			
Craft Shop (See Hobby, Toy, and Craft Shop)							C							
Craft Studio								X	X	X	X	X		
Crematoria													C	C
Dance School (See School for the Arts)														
Dairy, Ice Cream & Coffee Shops	11.3.21								XS	XS	XS	XS		
Day Care Center, Principal Use or Separate Use	11.3.31	CS	CS	CS	CS	CS		XS	XS	XS	XS	XS	XS	
Day Care Center, in Single Family Structure and up to 8 Children/Persons	11.3.27	XS	XS	XS	XS	XS	XS	XS	XS	XS	XS	XS	XS	
Day Care Center, in Single Family Structure from 9 to 12 Children/Persons	11.3.28	XS	XS	XS	XS	XS	XS	XS	XS	XS	XS	XS	XS	
Day Care Center, Located in Church or School, up to 50 Children/Persons	11.3.29	CS	CS	CS	CS	CS	CS	XS	XS	XS	XS	XS	XS	
Day Care Center, Located in Church or School, over 50 Children/Persons	11.3.30	CS	CS	CS	CS	CS	CS	XS	XS	XS	XS	XS	XS	
Department Store							CS				X	X		
Detective Agency								X	X	X	X	X		
Discotheque (See Lounge)														

NOTES
X - Permitted Use
XS - Permitted Use With Supp. Regs.
C - Conditional Use
CS - Conditional Use With Supp. Regs.
* Reference Sect. 21 Downtown
** No designation indicates use is not permitted **

Zoning Table of Uses (Amended 7-22-14)*

USE	SUPPLEMENTAL REGULATIONS	R-1	R-2	R-3	R-4	RM-1	RM-2	OIS	C-1	C-2	C-3	C-4	I-1	I-2
Distribution Center, Product													X	X
Doctors' and Dentists' Office								X	X	X	X	X		
Drapery and Linen Shop								X	X	X	X	X		
Drug Store (See Pharmacy)														
Dry Cleaning and Laundry Plant (Principal Use)													X	X
Dry Cleaning Service Outlet	11.3.33								XS	XS	XS	XS		
Duplex (See Dwelling, Two-family)														
Dwelling, Accessory	11.3.80	XS	XS	XS	XS	XS								
Dwelling, Manufactured (See Manufactured Home)							XS							
Dwelling, Single-Family (Site-built or Modular)		X	X	X	X	X		X				C		
Dwelling, Two-Family	11.3.32; 11.3.51				XS	XS	X	XS				CS		
Dwelling, Multi-Family	11.3.74; 11.3.51					XS	XS					CS		
Dwelling, Multi-Family Conversion	11.3.51						XS					CS		
Electronic Gaming Operations	11.3.34									CS				
Electric, Heating, Air Conditioning, Ventilating, Plumbing Sales and Service	11.3.35										CS	CS	XS	XS
Employment Agency									X	X	X	X		
Engineering, Architect or Surveying Service								X	X	X	X	X		
Equestrian Facilities	11.3.22, 11.3.36	CS	CS	CS	CS									
Event Center	11.3.85	CS	CS	CS	CS	CS	CS	CS	XS	XS	XS	XS		
Exterminators Office (See Pest Control)														
Fairground														C
Family Care Home	11.3.38	XS	XS	XS	XS									
Farm Equipment Sales	11.3.39												CS	CS
Farm Supply Store											C		X	X
Farmers' Market	11.3.81	XS	XS	XS	XS	XS		XS	XS	XS	XS	XS	XS	XS
Finance Company							XS	X	X	X	X	X		
Financial Institution	11.3.22							XS	XS	XS	XS	XS		
Firing Range, Indoors													C	C
Fitness Center (See Recreation Center, Indoors)														
Flea Market (Indoor)	11.3.76									CS	CS	CS	CS	
Flea Market (Outdoor)	11.3.22, 11.3.76												CS	CS
Floor Covering Store									X	X	X	X		
Floral and Christmas Items Store								X	X	X	X	X		
Florist, Retail								C	X	X	X	X		
Florist, Wholesale											X		X	X

NOTES
X - Permitted Use
XS - Permitted Use With Supp. Regs.
C - Conditional Use
CS - Conditional Use With Supp. Regs.
* Reference Sect. 21 Downtown
** No designation indicates use is not permitted **

Zoning Table of Uses (Amended 7-22-14)*

USE	SUPPLEMENTAL REGULATIONS	R-1	R-2	R-3	R-4	RM-1	RM-2	OIS	C-1	C-2	C-3	C-4	I-1	I-2
Food Store									X	X	X	C		
Formal Wear and Costume Rental Store								C	X	X	X	X		
Fortune Teller													C	
Fraternal and Service Organization Meeting Facilities (Non-Profit and Not-for-Profit)	11.3.41							CS	XS	XS	XS	CS		
Fuel Oil Sales (See Petroleum Distributor)														
Funeral Homes										C	C	C		
Furniture Repair Shop											C	C	X	X
Furniture Store (Retail)									X	X	X	X		
Furrier											C			
Fur Storage														X
Game Room/Video Arcade	11.3.42									CS	CS			
Garden Supply and Seed Store	11.3.22										XS	XS	XS	
Gas Station (See "Automobile Service Station")														
Gift, Novelty and Souvenir Store								X	X	X	X	X		
Glass and Mirror Shop											X	X	X	
Glass Contractor													X	
Golf Course (Public or Private)		C	C	C	C									
Grain Elevator														C
Grocery Store (See Food Store)														
Group Care Facility									C	C	C			
Gun and Ammunition Sales Shop										X	X	C	X	X
Gunsmith											X		X	
Hardware Store (See "Building and Home Materials Center")														
Heating Supplies and Sales (See Electric, Heating...Supplies and Sales)														
Hobby, Toy, and Craft Shop								X	X	X	X	X		
Home Center	11.3.22										CS		XS	
Home Decorating Center									X	X	X	X	X	
Home Electronics and Appliance Sales and Repair											X	X		
Home Improvement Store (See Home Center)														
Hospitals											C		C	
Hotel/Motel	11.3.43									CS	CS	CS		
Home for Aged	11.3.60								CS	CS	CS			
Home Occupation	11.3.59	XS	XS	XS	XS	XS						C		
Independent Living Center	11.3.60						XS		CS	CS	CS			

NOTES
X - Permitted Use
XS - Permitted Use With Supp. Regs.
C - Conditional Use
CS - Conditional Use With Supp. Regs.
* Reference Sect. 21 Downtown
** No designation indicates use is not permitted **

Zoning Table of Uses (Amended 7-22-14)*

USE	SUPPLEMENTAL REGULATIONS	R-1	R-2	R-3	R-4	RM-1	RM-2	OIS	C-1	C-2	C-3	C-4	I-1	I-2
Industrial Equipment, Sales, Supplies, and Repair	11.3.44												CS	XS
Insurance Agency (Principal Use)								C	X	X	X	X		
Interior Decorator								C	X	X	X	X		
Jewelry Sales (Principal Use) and Repair								X	X	X	X	X		
Key Shop and Locksmith											X	C	X	
Laboratories - Dental, Medical, Optical, and Research	11.3.46										XS	C	XS	XS
Landfill, Demolition(Principal Use)	11.3.69													CS
Laundromat									X	X	X	C		
Laundromat Plant (See Dry Cleaning and Laundry Plant)														
Lawn and Garden Service											X		X	
Leather Goods Shop (See Luggage and Leather Goods Shop)														
Library, Public								X	X	X	X	X		
Life Care Facility (See Continuing Care Facility)														
Linen Shop								X	X	X	X	X		
Liquor Store (See ABC Store)														
Locksmith (See Keyshop and Locksmith)														
Lounge (Principal Use)	11.3.47										CS		CS	
Luggage and Leather Goods Shop								X	X	X	X	X		
Lumber and Building Materials Yard	11.3.22												CS	XS
Machine Shop	11.3.67												XS	XS
Maintenance Service (See Cleaning and Maintenance Service)														
Manufactured Goods, Class 1	11.3.67												XS	XS
Manufactured Goods, Class 2	11.3.73													CS
Manufactured Home Sales	11.3.22												XS	XS
Manufactured Homes (See MH-1 Overlay)														
Manufacturing Machinery Sales and Service													X	X
Martial Arts School									X	X	X	C		
Medical Center									X	X	X	C		
Medical Supply Shop										X	X	C		
Meeting Facility	11.3.86							XS	XS	XS	XS	XS	XS	
Membership Warehouse Club	11.3.22										CS		XS	
Message and Errand Service										X	X	X		
Mini-Mart (no gas sales)	11.3.25								CS	XS	XS			
Mini-Warehouse	11.3.48												XS	XS

NOTES
X - Permitted Use
XS - Permitted Use With Supp. Regs.
C - Conditional Use
CS - Conditional Use With Supp. Regs.
* Reference Sect. 21 Downtown
** No designation indicates use is not permitted **

Zoning Table of Uses (Amended 7-22-14)*

USE	SUPPLEMENTAL REGULATIONS	R-1	R-2	R-3	R-4	RM-1	RM-2	OIS	C-1	C-2	C-3	C-4	I-1	I-2
Mirror Shop (See Glass and Mirror Shop)														
Mixed Use	11.3.51							C				CS		
Mobile Home (See Manufactured Home)														
Modular Home (See Dwelling, Single-Family)														
Monument Sales (Principal Use)	11.3.49										XS		XS	
Monument Sales (Accessory Use)										X	X			
Motel (See Hotel/Motel)														
Moving and Storage Facilities													C	X
Multi-Tenant Development, Class I									C	C	C	C	X	X
Multi-Tenant Development, Class II									C	C	C	C	X	X
Museum								X	X	X	X	X		
Music School								C	X	X	X	X		
Music Store Sales and Service									X	X	X	X		
Nail Salon (See Tanning and Nail Salon)														
News Stand (Principal Use)									X	X	X	X		
Notions Store (See Sewing Cloth and Notion's Store)														
Novelty and Souvenir Store (See Gift, Novelty and Souvenir Store)														
Nursery (Horticultural), Greenhouses	11.3.22										CS		XS	
Nursing Home	11.3.60								CS	CS	CS			
Office Equipment and Computer Store									X	X	X	X		
Offices								X	X	X	X	X		
Optician and Optical Supply Store								C	X	X	X	X		
Paint, and Wallpaper Store (See Home Decorating Center)														
Park, Active		CS	CS	CS	CS	CS		CS	XS	XS	XS	XS	XS	
Park, Passive		XS	XS	XS	XS	XS	CS	XS	XS	XS	XS	XS	XS	XS
Parking Lot - Principal Use (See Automobile Parking Lot)							XS							
Pawn Shop										C	C			
Personnel Agency (See Employment Agency)														
Pest Control Service													X	X
Pet Stores	11.3.52								XS	XS	XS	XS		
Pharmacy									X	X	X	C		
Photocopy Service								C	X	X	X	X		
Photofinish Laboratory											X		X	X
Photographic Studio								X	X	X	X	X		

NOTES
X - Permitted Use
XS - Permitted Use With Supp. Regs.
C - Conditional Use
CS - Conditional Use With Supp. Regs.
* Reference Sect. 21 Downtown
** No designation indicates use is not permitted **

Zoning Table of Uses (Amended 7-22-14)*

USE	SUPPLEMENTAL REGULATIONS	R-1	R-2	R-3	R-4	RM-1	RM-2	OIS	C-1	C-2	C-3	C-4	I-1	I-2
Picture Frame Shop								X	X	X	X	X		
Plumbing, Sales and Supplies (See Electric, Heating...Sales and Service)														
Pool Hall (not allowed per Town Ordinance)														
Post Office									X	X	X	X		
Postal Store and Contract Station									X	X	X	X		
Printing and Publishing													X	X
Produce Stand, Temporary (Accessory Use)	11.3.53									XS		XS		
Produce Stand (Principal Use)	11.3.54									CS	CS			
Prosthetics and Medical Equipment Rental (See Rental Center)														
Prototype Design and Development	11.3.79							CS		CS	CS	CS	CS	CS
Public Safety Station	11.3.56							XS	XS	XS	XS	XS	XS	XS
Public Utility Facility	11.3.37	XS	XS	XS	XS	XS		XS	XS	XS	XS	CS	XS	XS
Public Utility Transmission Lines		X	X	X	X	X	XS	X	X	X	X	C	X	X
Racetrack, Outdoor	11.3.22, 11.3.40						X							CS
Racetrack, Indoor											C		X	X
Radio Shop (See Home Electronics, and Appliance Sales)														
Radio and Television Stations											C		X	X
Railroad Terminal and Yards														C
Real Estate Agency								X	X	X	X	X		
Recreation Facility, Indoor	11.3.57							CS	CS	XS	XS	CS	XS	
Recreation Facility, Outdoor	11.3.22, 11.3.57							CS	CS	XS	XS	CS	XS	
Recreational Uses, Accessory	11.3.57	XS	XS	XS	XS	XS		XS	XS	XS	XS	XS		
Recreational Vehicle Sales	11.3.22						XS				CS		XS	XS
Recycling Deposit Station (Principal Use)	11.3.58												CS	XS
Recycling Processing Facility, (Indoors)													X	X
Recycling Station, Accessory													X	X
Repair & Servicing of Industrial Equipment/Machinery													X	X
Repair & Service Establishments over 10,000 sq. ft. in size													X	X
Rental Center, (no outdoor storage)									X	X	X		X	
Rental Center, (with outdoor storage)	11.3.71												CS	XS
Restaurant (Principal Use, Eating & Drinking Establishment)									X	X	X	X		
Restaurant, Drive-in	11.3.22									CS	CS			
Restaurant, Drive-Through	11.3.22, 11.3.61									CS	CS			
Restaurant, Fast Food	11.3.22, 11.3.61									CS	CS			

NOTES
X - Permitted Use
XS - Permitted Use With Supp. Regs.
C - Conditional Use
CS - Conditional Use With Supp. Regs.
* Reference Sect. 21 Downtown
** No designation indicates use is not permitted **

Zoning Table of Uses (Amended 7-22-14)*

USE	SUPPLEMENTAL REGULATIONS	R-1	R-2	R-3	R-4	RM-1	RM-2	OIS	C-1	C-2	C-3	C-4	I-1	I-2
Restaurants, Within Other Facilities	11.3.62								XS	XS	XS	XS		
Roofing Repair and Installation	11.3.63												XS	XS
Rooming and Boarding House		C	C	C	C							C		
School, Kindergarten, Elementary and Junior High	11.3.22, 11.3.55	CS	CS	CS	CS	CS		CS	CS	CS	CS			
School-Senior High	11.3.22, 11.3.55	CS	CS	CS	CS	CS	CS	CS	CS	CS	CS			
School, Vocational	11.3.22						CS	CS	CS	CS	CS	CS		
School for the Arts	11.3.22							CS	CS	CS	CS	CS		
Seasonal Outdoor Sales	11.3.64	XS	XS	XS	XS	XS		XS	XS	XS	XS	XS	XS	XS
Second-Hand and Consignment Shops (no outside storage)							XS	X	X	X	X	X		
Seed Store (See Garden Supply and Seed Store)														
Septic Tank Cleaning Service													C	C
Service Station (See Automobile Service Station)														
Sewing, Cloth, and Notions Store								X	X	X	X	X		
Shoe Repair Shop								C	X	X	X	X		
Shopping Center	11.3.22, 11.3.65							CS	CS	CS	CS			
Sign and Banner Shop									X	X	X	X		
Sign Painting/Fabrication Shop	11.3.67												XS	XS
Skating Rink, Indoor and Outdoor (See Recreation Facility, Indoor and Outdoor)														
Solid Waste Vehicle and Septic Tank Vehicle Storage Facility													C	C
Sporting Goods and Apparel Shop									X	X	X	X		
Stadium	11.3.22, 11.3.66	CS	CS	CS	CS									
Stamp Shop (See Coin and Stamp Shop)														
Stationery Shop								X	X	X	X	X		
Stock or Security Brokerage Firm								X	X	X	X	X		
Subdivision Sales Office	11.3.83	XS	XS	XS	XS	XS								
Supermarket (See Food Store)							XS							
Swim Clubs	11.3.57	CS	CS	CS	CS	CS		CS	CS	CS	CS			
Swimming Pool Sales, Service and Supplies							CS				C		X	X
Tailor and Alteration Shop								X	X	X	X	X		
Tanning and Nail Salon (Principal Use)									X	X	X	X		
Tattoo Parlor										C	C			
Tavern (See Lounge)														
Tax Preparation Service								X	X	X	X	X		
Taxidermist													X	X

NOTES
X - Permitted Use
XS - Permitted Use With Supp. Regs.
C - Conditional Use
CS - Conditional Use With Supp. Regs.
* Reference Sect. 21 Downtown
** No designation indicates use is not permitted **

Zoning Table of Uses (Amended 7-22-14)*

USE	SUPPLEMENTAL REGULATIONS	R-1	R-2	R-3	R-4	RM-1	RM-2	OIS	C-1	C-2	C-3	C-4	I-1	I-2
Television Sales and Repair (See Home Electronics, and Appliance Sales)														
Telecommunications Towers	11.3.75	CS	CS	CS	CS	CS		CS	CS	CS	CS		CS	CS
Temporary Automobile Parking Lot for Subdivision Sales Office	11.3.84	XS	XS	XS	XS	XS	CS							
Temporary Construction Trailer/Structures	11.3.70	XS	XS	XS	XS	XS	XS	XS	XS	XS	XS	XS	XS	XS
Textile Machinery Sales and Service							XS						X	X
Theater, Indoor Movie										C	C	C		
Theater, Outdoor Movie	11.3.22										CS			
Tire Recap or Repair Facility	11.3.38													CS
Tobacco Shop								X	X	X	X	X		
Toy Shop (See Hobby, Toy, and Craft Shop)														
Trading Stamp Redemption Store											X			
Trading and Conference Center											C			
Travel Agency								X	X	X	X	X		
Trophy and Plaque Shop									X	X	X	X		
Truck Terminal														C
Truck and Utility Trailer Rental Facility (Principal Use)														C
Truck Washing Facility														C
Upholstery Shop											X	X	X	
Variety Store									X	X	X	X		
Vending Company Supply House													X	X
Veterinary Office (See Animal Hospital)														
Video Arcade (See Game Room)														
Video Rental Shop (Principal Use)									X	X	X	X		
Warehouse (Excluding Wholesales Sales Operations and Mini-Warehouses)													X	X
Watch Repair and Sales (See Clock and Watch Sales and Repair)														
Welding Shop	11.3.67												CS	XS
Wholesale Sales Operation										CS	CS		XS	XS
Wrecker Service (See Automobile/Vehicle Towing Service)														

NOTES
X - Permitted Use
XS - Permitted Use With Supp. Regs.
C - Conditional Use
CS - Conditional Use With Supp. Regs.
* Reference Sect. 21 Downtown
** No designation indicates use is not permitted **

STAFF REQUEST TO PLACE ITEM ON BOARD AGENDA

Date of Meeting: March 10, 2015

Department Requesting: Planning and Community Development

Staff Member Requesting: Chris Rice

Case #: TA-003098-2015

Brief Summary of the item:

Petition TA-003098-2015 is a request by staff, on behalf of the Board of Commissioners, to amend Section 16.1.9 Effect of Denial on Subsequent Petitions and Section 16.2.11 Twelve-month Limitation on Re-application of the Waxhaw Unified Development Ordinance to revise the requirements with regard to the twelve-month resubmission period on re-application after a denial of a rezoning or conditional rezoning application by the Board of Commissioners.

Attachments Included:

- Application
- Staff Report
- Proposed Text Amendment
- Draft of February 23, 2015 Planning Board Minutes containing recommendation of item.
-
-
-
-
-
-

Date submitted to Town Clerk: 3/2/2015

Town of Waxhaw
Planning & Community Development
PO Box 617
Waxhaw, NC 28173
704-843-2195 (Phone)
704-243-3276 (Fax)
www.waxhaw.com

Date Received
January 14, 2015
Received By
Chris Rice
Fee
N/A

TEXT AMENDMENT APPLICATION

Date of Application: January 14, 2015 Application Number: TA-003098-2015
(completed by staff)

Applicant Information

Applicant Name: Town Staff on behalf of the Board of Commissioners

Applicant Address: 1150 N. Broome Street, Waxhaw, NC 28173

Applicant Email Address: crice@waxhaw.com

Applicant Telephone: 704-843-2195

Type of Change: New Addition _____ or Revision X

Ordinance Section: Section 16.1.9 and Section 16.2.11

Current Text: See attached.

Proposed Text: See attached.

Reason for requested change (attach additional sheets if necessary): Board of Commissioners requested amendment to allow for the waiving of the required twelve-month period on re-submitting a petition for rezoning or conditional rezoning after an application has been denied.

I do herby certify that all information which I have provided for this application is, to the best of my knowledge, correct.

Signature of Applicant

1/14/15
Date

All of the information herein required has been submitted by the applicant and is included or attached with this application

Lori Oakley
(Signature of Zoning Administrator)

1/14/2014
(Date)

TO BE FILLED OUT BY ZONING ADMINISTRATOR

Completed application submitted on: 1/14/15

Reviewed by Planning Board on: 2/16/2015

Action of Planning Board: Voted 6 to 1 to send favorable reccomendation to Board of Commissioners. Planning Board Member Burrell dissented. He would like to see language requiring Board of Commissioners to make decision.

Town Board Public Hearing Held On: March 10, 2015

Date of Town Board Decision:

Action Taken by Town Board:

***Newspaper Affidavit should be attached**

Public Hearing Notice Filed in: Enquirer - Journal
(Name of Newspaper)

Date(s) Notices Published: 2/27/15 and 3/6/15

Text Amendment TA-003098-2015
Revisions to Section 16.1.9 Effect of Denial on Subsequent Petitions and Section 16.2.11 Twelve-Month Limitation on Re-application

EXPLANATION OF THE REQUEST

Petition TA-003098-2015 is a request by staff, on behalf of the Board of Commissioners, to amend Section 16.1.9 Effect of Denial on Subsequent Petitions and Section 16.2.11 Twelve-month Limitation on Re-application of the Waxhaw Unified Development Ordinance to revise the requirements with regard to the twelve-month resubmission period on re-application after a denial of a rezoning or conditional rezoning application by the Board of Commissioners.

STAFF REQUESTED UDO CHANGES

Section 16.1.9 Effect of Denial on Subsequent Petitions (See attached language.)

Section 16.2.11 Twelve-Month Limitation on Re-application (See attached language.)

PLANNING STAFF ANALYSIS

Currently the Unified Development Ordinance does not allow for submission of a similar rezoning application or conditional rezoning application or resubmission of a revised application prior to the expiration of a twelve month resubmission period after a denial by the Board of Commissioners. The only opportunity to avoid the twelve month resubmission period is in the case of a conditional rezoning request that has been significantly changed.

During consideration of a previous application by the Board of Commissioners, it was determined by the Board that there may be certain instances where the twelve month resubmission period on an application or re-application should be waived after a denial. The Board of Commissioners instructed the staff to draft a text amendment that would address this issue. Staff researched other municipalities in North Carolina to find out if they waive the requirement under certain conditions and several municipalities had criteria for waiving the re-submission period. All of them used similar criteria when determining whether to waive the requirement or not. The text amendment draft incorporates these criteria into Section 16.1.9 and Section 16.2. The proposed text amendment, if approved, will give the Administrator the authority to waive the twelve month restriction period if one or more of the following has occurred:

A. There has been a significant change in the zoning district classification of an adjacent piece of property.

B. The Town has adopted a plan that changes policy regarding how the property affected by the amendment should be developed.

C. Construction or expansion of a road, water line, sewer line, or other such facilities has occurred to serve the property and can comfortably accommodate the intensity of development allowed under the proposed classification.

PLANNING STAFF RECOMMENDATION

Staff recommends approval of TA-003098-2015. The proposed revisions to Section 16.1.9 and Section 16.2.11 will allow the Administrator to waive the twelve month resubmission period if certain criteria are met.

PLANNING BOARD RECOMMENDATION

The Planning Board, at their February 23, 2015 special called meeting, voted (6-1) to send a favorable recommendation to the Board of Commissioners on TA-003098-2015. Mr. Burrell voted against the recommendation. He believes the text amendment should be revised so the Board of Commissioners will be responsible for making the decision whether to allow for re-application prior to the expiration of the twelve month re-application period. He said that this determination should be made after the Administrator has relayed to the Board of Commissioners that one of the three conditions has been met. He also recommended a fourth condition be added to require the Board of Commissioners to have staff initiate an application prior to the expiration of the 12 month re-application period if the Board of Commissioners realizes a mistake was made during consideration of an application that was denied.

Submitted by: Chris Rice, Planner II

Amendments to Section 16 of the Unified Development Ordinance

16.1.9 Effect of Denial on Subsequent Petitions

When the Board of Commissioners shall have denied a map application or the application shall have been withdrawn after the first notice of the public hearing thereon, the Board of Commissioners shall not entertain another application for the same or similar map amendment, affecting the same property or a portion of it until the expiration of a one year period, extending from the date of denial or withdrawal, as applicable. ~~Provided, however, one additional application may be made before the expiration of the one year period~~ This waiting period shall not be applicable for the same property or a portion of it if the first application was not for a Conditional Zoning District and the second application is for a Zoning District designated as a Conditional Zoning District or the Administrator determines at least one of the following has occurred:

A. There has been a significant change in the zoning district classification of an adjacent piece of property.
B. The Town has adopted a plan that changes policy regarding how the property affected by the amendment should be developed.
C. Construction or expansion of a road, water line, sewer line, or other such facilities has occurred to serve the property and can comfortably accommodate the intensity of development allowed under the proposed classification.

16.2.11 Twelve-Month Limitation on Re-application

If a request for rezoning to conditional zoning is denied by the Board of Commissioners, a similar application for the same property or any portion thereof shall not be filed until the expiration of a twelve (12) month period from the date of the most recent denial by the Board of Commissioners. This waiting period shall not be applicable where the application for a conditional zoning is substantially different from the original application or the Administrator determines that at least one of the following has occurred:

A. There has been a significant change in the zoning district classification of an adjacent piece of property.
B. The Town has adopted a plan that changes policy regarding how the property affected by the amendment should be developed.
C. Construction or expansion of a road, water line, sewer line, or other such facilities has occurred to serve the property and can comfortably accommodate the intensity of development allowed under the proposed classification.

The term "substantially different" as herein applied shall mean:

A. The proposed principal use is different than the use contained in the original application; or

B. The gross floor area of the proposed development is fifty (50) percent or more smaller than contained in the original application.

Minutes of the Waxhaw Planning Board
Town of Waxhaw, NC
February 23, 2015

The Waxhaw Planning Board met in a special session Monday, February 23, 2015 at 6:30 p.m. at the Waxhaw Police Department Community Room.

Special Called Meeting

1. **Call to Order**

   Chairman Godfrey called the meeting to order at 6:30 pm.

2. **Roll Call and Determination of Quorum**

   A roll call and determination of quorum was made.

   Present: Chairman Godfrey, Vice-Chairman Underwood, John Cannamela, Michael Kreimer, Fred Burrell, Thomas Dwyer, Bob Morgan, Dan Gingrich (not seated), Staff McCarter, Staff Rice, Staff Oakley, Interim Manager Mahar, and Recording Secretary Oliver.

   Absent: James Mathieson

3. **Work Session**

   NONE

4. **Unfinished Business**

   NONE

5. **New Business**

   A. RZ-003080-2015 - A request by McCray Smith, on behalf of Cray, Inc., for a rezoning/map amendment on parcel 06-138-001 from R4 (Single-family Residential) to C1 (Neighborhood Commercial) located at 3808 S. Providence Road.

   Staff McCarter gave a presentation on RZ-003080-2015 (see attached).

   Ken McCoy stated that he was a resident of the Oaks neighborhood. He stated that he had four points he would like to stress when considering the proposed rezoning. First he stated that there are over 100 homes in the Oaks and multiple drivers per home and that traffic is a real concern. He stated that he was concerned that the proposed rezoning would worsen traffic at the intersection of Red Oaks Trail and Highway 16. He stated that he appreciates bringing business to Waxhaw but that the rural nature of the

town drew him and his family to Waxhaw and he would like to preserve the rural character. Ken McCoy stated that he felt that the rezoning is not in keeping with Waxhaws future land use plan. He stated that he felt neighborhoods need protection by the town because they already suffered from decreased property values due to an unfavorable school district redistricting.

James Miller stated that three years ago there was a rezoning two doors down with the B&H Holding rezoning. He stated that he can appreciate that the owner would like to rezone his property to commercial but feels the owner just wants to increase the value of his property. He stated that that he is concerned with traffic and asked for the Planning Board to consider a traffic impact study. James Miller stated that if all the commercial property in the area was developed it would be a traffic nightmare. He stated that he was against the proposed rezoning.

Kevin Leebrick stated that at the intersection of Red Oaks Trail and Highway 16 it is very difficult to make a left turn. He stated that if the rezoning is approved that he would like to see a condition placed on the approval that an easement would be created on the property for a neighborhood sign for The Oaks.

Mark Thompson stated that that he has lived in The Oaks for 19 years. He stated that many people enjoy walking on the neighborhood streets and stated that the traffic is dangerous. He stated that the owner has gutted the house and turned it into an office and that he has been selling cars out of his house and that he has many cars that are unlicensed stored at the house.

McCray Smith, the applicant, stated that he loves Waxhaw and wants to make it as great as it can be and that he has several investments in the town. He stated that he has sold two vehicles out of the garage at that house in the past month and that is all he has ever sold. He stated that Providence Road is the busiest road in the town and that there are traffic problems associated with the road. McCray Smith stated that he has neighbors that would also like to rezone their property and that he has tried to buy the houses next door but could not afford the asking price. He stated that he has a verbal agreement with an insurance company to use the property for an office if the proposed rezoning is approved. He stated that the proposed office use would create very little traffic.

Thomas Dwyer asked if the proposed office would have its own entrance off of Highway 16. Staff McCarter stated that NCDOT would require a driveway permit to allow a driveway cut in that location. She stated that it would only have access via Red Oaks Trail.

Fred Burrell asked if the property owners were formally notified via US mail about the rezoning petition. Staff Oakley stated that the adjoining property owners were not notified via mail because adjoining property owner notices are not required prior to the

Planning Board hearing. She stated that staff did post a rezoning sign on the property and that it was prior to the time period required by state statutes.

Fred Burrell stated that the Comprehensive Plan is being rewritten and that the updated plan would most likely call for a new Unified Development Ordinance (UDO) to be written following the completion of the Comprehensive Plan. He stated that the Highway 16 Corridor Plan is very good and looks at the road as a whole. He stated that the traffic is a problem and that he believes it should be a requirement of the UDO to conduct a traffic impact study and he would like to require a traffic study prior to the consideration of the rezoning petition. He stated that he envisioned commercial zoning in that area along Highway 16. Fred Burrell stated that the problem with approving multiple isolated rezonings is that there is not a comprehensive view of the effects that the rezonings will have on the area. He stated that the proposed rezoning does not agree with corridor plan because the parcel by parcel consideration of rezonings are too fragmented.

McCray Smith stated that all but three parcels along Highway 16 in the area around his property are commercially zoned. Fred Burrell stated the proposed rezoning petition is a little too early to look at the area comprehensively.

McCray Smith stated that that all commercial properties along Highway 16 have residential properties abutting them. He stated that his property is very small and would have little impact compared to other properties along Highway 16.

Staff Mahar stated that the NCDOT would allow a curb cut for the property and the location would be determined by the NCDOT.

An audience member stated that the B&H Holdings rezoning, that is north of the property in question, was approved for a right-in-right-out driveway on to Highway 16 and there would be a traffic signal installed at the entrance to Alma Village to help ease traffic issues. Staff Mahar stated that that the information stated is correct but that the driveway configuration has yet to be determined and that it would be determined based on the use.

Fred Burrell motioned to send an unfavorable recommendation for RZ-003080-2015 to the Board of Commissioners. John Cannamela seconded. The motion passed unanimously, (7-0).

Fred Burrell stated that the rezoning petition is not consistent with the recommendations of the Highway 16 Corridor Plan because fragmented rezonings would lead to more and more driveway cuts onto Highway 16 further contributing to traffic problems with driveway access and traffic concerns at the intersection. He stated that the Comprehensive Plan and the UDO are not yet to a point where they would provide proper protections to residential properties with buffer and screening

requirements because the request would allow any use permitted in the C-1 zoning district and would not protect the neighborhood.

B. TA-003098-2015 - A request by staff, on behalf of the Board of Commissioners, to amend Section 16.1.9 Effect of Denial on Subsequent Petitions and Section 16.2.11 Twelve-month Limitation on Re-application of the Waxhaw Unified Development Ordinance to revise the requirements with regard to the twelve-month resubmission period on re-application after a denial of a rezoning or conditional rezoning application by the Board of Commissioners.

Staff Rice gave a presentation on TA-003098-2015 (see attached).

Thomas Dwyer asked about the proposed text amendment and how it would affect applications that met one but not all three of the conditions outlined. Staff Rice used the Andover Chapel rezoning petition as an example.

Vice-Chairman Underwood asked if there were any outstanding cases that would be affected by this text amendment. Staff Rice stated that there were.

Fred Burrell stated that he felt the proposed text amendment is a good idea but he would like to see it written in a way that was a little more black and white. He stated that the Zoning Administrator should notify the Board of Commissioners if an applicant meets any of these conditions. He stated that he wants to avoid gray area in the wording and that having black and white regulations would be better for development.

Chairman Godfrey stated that he is not sure how he feels about the Board of Commissioners making the decision and not utilizing the expertise of planning staff.

Fred Burrell stated that he feels a fourth condition should be added stating that if the Board of Commissioners finds that they would like to reverse one of their rezoning denials that the applicant should not have to wait 12 months to resubmit. He stated that the Board of Commissioners should decide as a group whether or not to ask the applicant to present the case again. Staff Rice asked if the Board of Commissioners would instruct staff to initiate a new application for the applicant. Fred Burrell stated that the Board of Commissioners would instruct staff to initiate a new application.

Staff Mahar stated that he disagrees with adding a fourth condition. He also stated that Attorney Spencer has reviewed the proposed text amendment with staff and that it has been looked at from many different angles. He stated that the Zoning Administrator should be able to make the determination.

Chairman Godfrey stated that he feels that the town's boards and committees need to have confidence in staff to make decisions.

John Cannamela motioned to send a favorable recommendation for TA-003098-2015 to the Board of Commissioners. Bob Morgan seconded. The motion passed six to one, (6-1).

Fred Burrell opposed the motion.

Fred Burrell stated that the reason that he opposed the motion is that conditions should be more black and white. He stated that if two or three of the conditions are met that it should automatically be brought to attention of Board of Commissioners and if the Board wishes to reverse one of their rezoning decisions, that the Board of Commissioners should be able to instruct staff to initiate a new application and the case should be heard again.

6. **Other Business - Update on previous case(s) heard by the Planning Board**

Staff Oakley stated that the Berger Daycare case was approved by the Board of Commissioners. She stated that the Waxhaw Park CUP revision was also approved with the condition that a church use not be included.

7. **Minutes for correction and approval: January 20, 2015 regular meeting**

Michael Kreimer motioned to approve the minutes from the January 20, 2015 special meeting. Thomas Dwyer seconded. The motion passed unanimously, (7-0).

Chairman Godfrey stated that Planning Board members should be mindful of their actions and all members are representing the Planning Board and that members should be respectful of that at all times.

8. **Adjournment**

Michael Kreimer motioned to adjourn the meeting at 7:14 p.m. Thomas Dwyer seconded. The motion passed unanimously, (7-0).

The meeting adjourned at 7:14 p.m.

Respectfully Submitted,

_____

Chairman, David Godfrey

_____

Recording Secretary, Maxx Oliver

Draft

VI. New Business

A. Discussion and Possible Action of the YMCA Agreement
Presenter: Steve Maher

Information

The YMCA is considering opening a branch within the municipal limits. The parties have discussed a private / public partnership where the Town will provide use of Town property and the YMCA will provide certain recreational activities. The next step is to enter into a Letter of Intent outlining the agreement.

Board Action

- Possible Action: authorize the Town Manager and Town Attorney to negotiate a Letter of Intent with the YMCA.

VI. New Business

B. Discussion and Possible Action involving Transition of Interim Town Manager with new Town Manager
Presenter: Chaplin Spencer

Information

The Board appointed Warren Wood as Town Manager effective March 30, 2015. The Board needs to end Interim Manager's Mahar's appointment as Interim Manager. The motion may include any transitional duties. The Board should further decide on the associated appointment of Finance Director as the Town Manager has historically been appointed to this role.

Board Action

- Possible Action motion to end Interim Manager Mahar's term as Town Manager and motion to end Interim Manager's term as Finance Director and appoint replacement.

VI. New Business

C. Discussion and Possible Action on Increasing the Town Manager's Contract Approval Threshold to $15,000
Presenter: Steve Maher

Information

The Town Manager is currently authorized to sign contracts up the $6,000. Contracts that exceed this amount must come before the Board of Commissioners for approval. This Board discussed increasing this amount several times while approving contracts. The $15,000 limit remains low but will allow more flexibility until this item can be studied further.

Board Action

- Possible Action motion to increase the Town Manager's contract authority to $15,000.