ALDI GROCERY STORE #06

CONSTRUCTION PLANS

TOWN OF WAXHAW, UNION COUNTY, NORTH CAROLINA

SITE AND DEVELOPMENT DATA	
JURISDICTION	TOWN OF WAXHAW
TAX PARCEL(S):	06-162-018
SITE ADDRESS:	2913 PROVIDENCE ROAD SOUTH, WAXHAW, NC
ZONING	EXISTING ZONING CD-C3
USE CLASSIFICATION	COMMERCIAL
TOTAL AREA	8.96 ACRES
MINIMUM FRONT SETBACK	20'
MINIMUM CORNER/SIDE SETBACK	45' & 25'
MINIMUM REAR SETBACK	25'
DISTURBED AREA	6.32 ACRES (INCLUDING OFFSITE IMRPOVEMENTS)

Town of Waxhaw
Approved for Construction Only
These drawings meet the minimum criteria specified in the Town Unified Development Ordinance and are approved for construction only. This approval does not relieve the developer from obtaining approvals from other agencies having authority over the project. The developer must submit as-built drawings to the Town prior to obtaining any permits to operate or fire hydrants.
Approved By: ABlestinger Date: 8/27/2018

EAGLE ENGINEERING

2013 Van Buren Avenue
Indian Trail, NC 28079
(704) 882-4222

P.O. BOX 551
Alpharetta, GA 30009
(678) 339-0640

www.eagleonline.net

PROJECT ENGINEER: JOHN H. ROSS, P.E.
STREET ADDRESS: 2013A VAN BUREN AVENUE
CITY, STATE, ZIP INDIAN TRAIL, NC 28079
PHONE: 704.882.4222
FAX: 704.882.4232

NORTH CAROLINA PROFESSIONAL ENGINEER SEAL 14959 JOHNNY HOUSTON ROSS 2-26-18

PREPARED FOR: ALDI, INC. - SALISBURY DIVISION
STREET ADDRESS: 1985 OLD UNION CHURCH ROAD
CITY, STATE , ZIP: SALISBURY, NC 28146
PHONE: (704) 642-0023 EXT. 122
CONTACT: TODD BONNETT

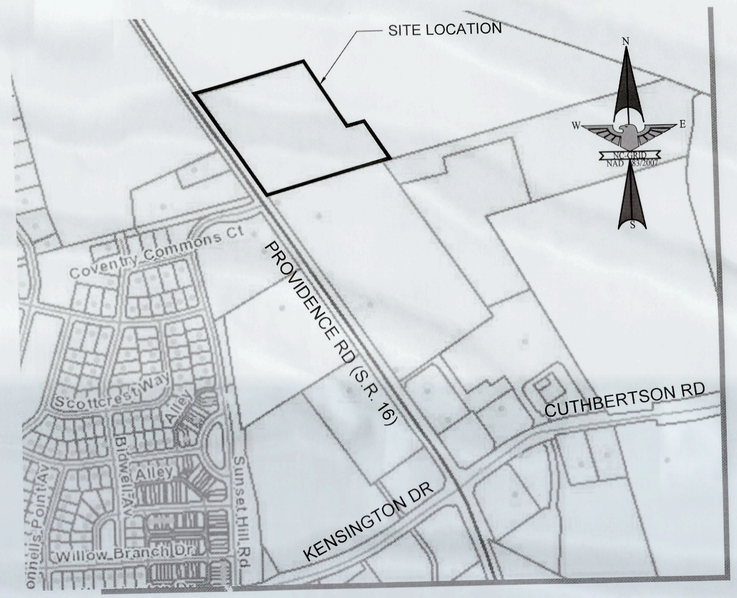

VICINITY MAP

SCALE: 1" = 400'

Sheet List Table	
Sheet Number	Sheet Title
C-0.0	COVER SHEET
C-1.0	EXISTING CONDITIONS
C-2.0	SITE PLAN OVERALL
C-2.1	TRUCK MOVEMENT PLAN
C-3.0	EROSION CONTROL PLAN
C-3.1	EROSION CONTROL DETAILS
C-3.2	EROSION CONTROL DETAILS
C-3.3	STANDARD SPECIFICATIONS
C-4.0	GRADING PLAN-OVERALL
C-4.1	FINISH GRADING PLAN
C-4.2	STORM DRAINAGE PLAN & PROFILE
C-5.0	UTILITY PLAN-OVERALL
C-6.0	SITE DETAILS - STORM
C-6.1	SITE DETAILS - WATER AND SEWER
C-6.2	SITE DETAILS - WATER AND SEWER
L-1.1	L-1.1 PLANTING PLAN
L-1.2	L-1.2 PLANT LEGEND & SPECIFICATIONS
E-1.0	LIGHTING PLAN

BEFORE YOU DIG!
CALL 1-800-632-4949
N.C. ONE-CALL CENTER
IT'S THE LAW.

NO.	DATE	BY	ISSUE
1	4-9-18	KEW	1st PLANCHECK REVISIONS PER TOWN & NCDOT
2	6-12-18	KEW	2nd PLANCHECK REVISIONS PER TOWN & NCDOT
3	8-1-18	KEW	3rd PLANCHECK REVISIONS PER TOWN & NCDOT

EEI Project Number: 6076

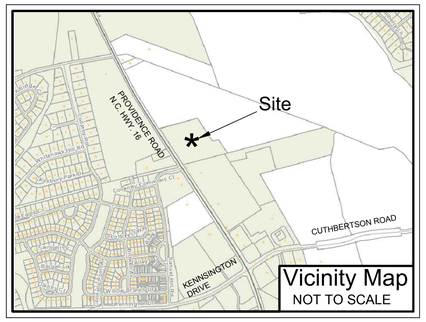

MISCELLANEOUS NOTES

AREAS COMPUTED USING COORDINATE GEOMETRY.

IRON REBARS AT ALL PROPERTY CORNERS UNLESS OTHERWISE NOTED.

DEED REFERENCE: AS SHOWN.

ALL ADJOINER PROPERTY OWNER INFORMATION IS TAKEN FROM CURRENT DEEDS AND TAX RECORDS AND ARE CONSIDERED "NOW OR FORMERLY".

RAW ERROR OF CLOSURE: 1:10,000+. BOUNDARY TRAVERSE WAS ADJUSTED USING THE LEAST SQUARES METHOD.

OTHER UNDERGROUND UTILITIES MAY EXIST BUT THEIR LOCATIONS ARE NOT KNOWN.

THIS SURVEY IS OF AN EXISTING PARCEL OR PARCELS OF LAND.

ALL DISTANCES SHOWN ARE HORIZONTAL GROUND DISTANCES.

THE PROPERTY SHOWN HEREON IS NOT LOCATED WITHIN A SPECIAL FLOOD HAZARD AREA AS SHOWN ON F.E.M.A. FLOOD INSURANCE RATE MAP COMMUNITY PANEL NO. 3710447400J, EFFECTIVE DATE OCTOBER 16, 2008.

CONTOUR INTERVAL: 1 FOOT

ELEVATION DATUM: NAVD 88

UTILITY NOTES

THE LOCATION OF UTILITIES SHOWN HEREON ARE FROM OBSERVED EVIDENCE OF ABOVE GROUND APPURTENANCES ONLY. THE SURVEYOR WAS NOT PROVIDED WITH UNDERGROUND PLANS TO DETERMINE THE LOCATION OF ANY SUBTERRANEAN USES. THIS SURVEYOR MAKES NO GUARANTEE THAT THE UTILITIES SHOWN HEREON COMPRISE ALL SUCH UTILITIES IN THE AREA, EITHER IN SERVICE OR ABANDONED. THERE IS NO CERTAINTY OF THE ACCURACY OF THE INFORMATION AND IT SHALL BE CONSIDERED IN THE LIGHT BY THOSE USING THIS SURVEY. UTILITIES AND STRUCTURES NOT SHOWN MAY BE ENCOUNTERED. THE OWNER, HIS CONSULTANTS AND HIS CONTRACTORS SHALL HEREBY DISTINCTLY UNDERSTAND THAT THIS SURVEYOR IS NOT RESPONSIBLE FOR THE SUFFICIENCY OF THE UNDERGROUND UTILITY INFORMATION PROVIDED HEREON, ALTHOUGH HE DOES CERTIFY THAT THEY ARE LOCATED AS ACCURATELY AS POSSIBLE FROM THE INFORMATION AVAILABLE. THE SURVEYOR HAS NOT PHYSICALLY LOCATED THE UNDERGROUND UTILITIES.

Call Before You Dig!!
North Carolina One Call
1-800-632-4949
IT'S THE LAW
http://www2.ncocc.org

ZONING INFORMATION

EXISTING ZONING: CU-C3
CASE # CU-2006-009 APPROVED MARCH 13, 2007

SCHEDULE B, SECTION II

SCHEDULE B - SECTION II
EXCEPTIONS
TITLE POLICY NO. NCS-757906-PHX1, EFFECTIVE DATE APRIL 20, 2016

1. DEFECTS, LIENS, ENCUMBRANCES, ADVERSE CLAIMS OR OTHER MATTER, IF ANY, CREATED, FIRST APPEARING IN THE PUBLIC RECORDS OR ATTACHING SUBSEQUENT TO THE EFFECTIVE DATE HEREOF BUT PRIOR TO THE DATE THE PROPOSED INSURED ACQUIRES FOR VALUE OF RECORD THE ESTATE OR INTEREST OR MORTGAGE THEREON COVERED BY THIS COMMITMENT.

2. TAXES OR ASSESSMENTS FOR THE YEAR 2016, BUT NOT YET DUE AND PAYABLE, AND ALL SUBSEQUENT YEARS.

3. GRANT OF EASEMENT TO NORTH CAROLINA NATURAL GAS CORPORATION, A DELAWARE COPORATION RECORDED IN BOOK 927, PAGE 693, UNION COUNTY REGISTRY. **AFFECTS THE PROPERTY TO THE EXTENT SHOWN HEREON.**

4. RIGHT-OF-WAY AND EASEMENT AGREEMENT BY AND BETWEEN CUTHBERTSON RD I, LLC, A NORTH CAROLINA LIMITED LIABILITY COMPANY AND CARRINGTON - FIST COLONY, LLC, A NORTH CAROLINA LIMITED LIABILITY COMPANY RECORDED IN BOOK 4142, PAGE 13, UNION COUNTY REGISTRY. **AFFECTS THE PROPERTY TO THE EXTENT SHOWN HEREON.**

5. DEED FOR HIGHWAY RIGHT OF WAY TO CUTHBERTSON RD I, LLC RECORDED IN BOOK 4869, PAGE 193, UNION COUNTY REGISTRY. **AFFECTS THE PROPERTY TO THE EXTENT SHOWN HEREON.**

6. EASEMENTS AND ANY OTHER FACTS AS SHOWN ON PLAT RECORDED IN MAP BOOK 4, FILE 119, UNION COUNTY REGISTRY. **DOES NOT AFFECT THE SUBJECT PROPERTY.**

7. TITLE TO ANY PORTION OF THE PROPERTY LYING WITHIN THE RIGHT OF WAY OF PROVIDENCE ROAD. **A PORTION OF THE PROPERTY LIES WITHIN THE N.C.D.O.T. MAINTENANCE RIGHT OF WAY OF PROVIDENCE ROAD.**

8. RIGHTS OF PARTIES IN POSSESSION AS TENANTS ONLY, UNDER UNRECORDED LEASES(S) OR RENTAL AGREEMENT(S).

9. ENCROACHMENTS, OVERLAPS, BOUNDARY LINE DISPUTES, DEFICIENCY IN AMOUNT OF AREA, RIGHTS, EASEMENTS, DITCHES, CARTWAYS, SETBACKS, RIGHT OF PARTIES IN POSSESSION, INTEREST OR CLAIMS WHICH WOULD BE REVEALED BY A CURRENT AND ACCURATE SURVEY AND INSPECTION OF THE LAND.

LEGAL DESCRIPTION

BEGINNING AT AN EXISTING P.K. NAIL IN THE ASPHALT OF THE "REAR ACCESS DRIVE/ROADWAY TRACT" AS SHOWN IN DEED BOOK 4142, PAGE 13, UNION COUNTY REGISTRY, AND HAVING NORTH CAROLINA STATE PLANE COORDINATES OF N: 445,242.77 E: 1,472,634.16. SAID BEGINNING POINT BEING LOCATED ON THE LINE OF SARA LIGHTING, INC. PROPERTY (DEED BOOK 5213, PAGE 513).

THENCE FROM THE POINT OF BEGINNING S77°09'41"W 62.07 FEET TO A POINT IN PROVIDENCE ROAD (N.C. HIGHWAY 16), THENCE ALONG PROVIDENCE ROAD THE FOLLOWING TO COURSES: 1) N32°05'30"W 237.97 FEET TO A POINT, 2) N31°57'45"W 391.83 FEET TO A POINT BEING THE SOUTHERLY CORNER OF THE ROBERT AND CHRISTINE PFISTER PROPERTY (DEED BOOK 376, PAGE 137).

THENCE LEAVING PROVIDENCE ROAD AND WITH THE LINE OF ROBERT & CHRISTINE PFISTER THE FOLLOWING 4 COURSES: 1) N77°06'53"E CROSSING A 1/2" NEW IRON REBAR AT 41.30 FEET FOR A TOTAL DISTANCE OF 619.14 FEET TO AN EXISTING 1" IRON PIPE, 2) S32°13'38"E 391.75 FEET TO AN EXISTING 1" IRON PIPE, 3) N77°24'05"E 93.93 FEET TO AN EXISTING 1/2" EYE BOLT, 4) S32°03'59"E 238.77 FEET TO AN EXISTING 1" IRON PIPE IN THE NORTHERLY LINE OF CUTHBERTSON RD I, LLC (DEED BOOK 4142, PAGE 4).

THENCE WITH THE LINE OF THE CUTHBERTSON RD I, LLC PROPERTY AND CONTINUING WITH THE LINE OF THE AFOREMENTIONED SARA LIGHTING, INC. PROPERTY, S77°09'41"W 652.84 FEET TO THE POINT AND PLACE OF BEGINNING.

THE PROPERTY AS DESCRIBED CONTAINS 8.965 ACRES, MORE OR LESS, ALL AS SHOWN ON AN ALTA/NSPS SURVEY PREPARED BY EAGLE ENGINEERING, INC. (RUSSELL L. WHITEHURST, NC PLS L-3661) AND DATED JUNE 5, 2017.

LEGEND OF SYMBOLS & ABBREVIATIONS

EIP - EXISTING IRON PIPE
EIR - EXISTING IRON REBAR
NIR - NEW IRON REBAR
S.T. - SIGHT TRIANGLE
M.B.S. - MINIMUM BUILDING SETBACK
P.S.D.E. - PUBLIC STORM DRAINAGE EASEMENT
S.S.E. - SANITARY SEWER EASEMENT
SSMH - SANITARY SEWER MANHOLE
R/W - RIGHT OF WAY
GPUE - GENERAL PUBLIC UTILITY EASEMENT
C.P. - COMPUTED POINT
ECM - EXISTING CONCRETE MONUMENT
E.P.K. - EXISTING P.K. NAIL

- HANDICAPPED PARKING
- TRANSMISSION TOWER
- UTILITY POLE
- UNDERGROUND GASLINE
- OVERHEAD UTILITY LINE
- SANITARY SEWER LINE
- SANITARY SEWER MANHOLE
- FIRE HYDRANT
- WATER VALVE
- STORM DRAIN MANHOLE
- YARD INLET / AREA DRAIN
- RAILROAD TRACK
- MONITORING WELL
- ELECTRIC BOX/TRANSFORMER
- CATCH BASIN
- STORM DRAIN
- WATER LINE
- FENCE LINE
- ZONING LINE
- UNDERGROUND TELEPHONE

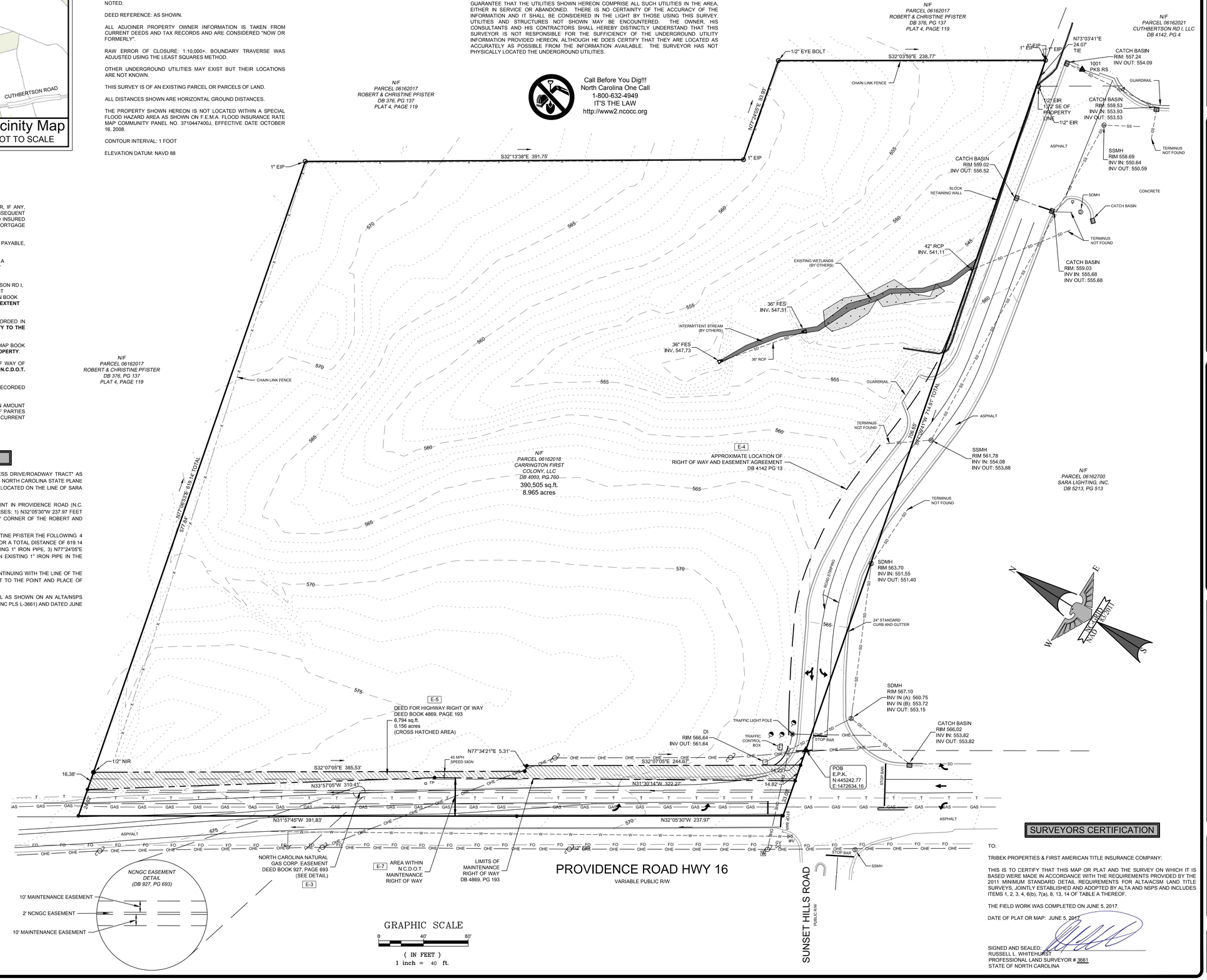

SURVEYORS CERTIFICATION

TO:

TRIBEK PROPERTIES & FIRST AMERICAN TITLE INSURANCE COMPANY:

THIS IS TO CERTIFY THAT THIS MAP OR PLAT AND THE SURVEY ON WHICH IT IS BASED WERE MADE IN ACCORDANCE WITH THE REQUIREMENTS PROVIDED BY THE 2011 MINIMUM STANDARD DETAIL REQUIREMENTS FOR ALTA/ACSM LAND TITLE SURVEYS, JOINTLY ESTABLISHED AND ADOPTED BY ALTA AND NSPS AND INCLUDES ITEMS 1, 2, 3, 4, 6(b), 7(a), 8, 13, 14 OF TABLE A THEREOF.

THE FIELD WORK WAS COMPLETED ON JUNE 5, 2017.

DATE OF PLAT OR MAP: JUNE 5, 2017.

SIGNED AND SEALED:
RUSSELL L. WHITEHURST
PROFESSIONAL LAND SURVEYOR # 3661
STATE OF NORTH CAROLINA

EAGLE ENGINEERING
P.O. BOX 551
Alpharetta, GA 30009
(678) 339-0640
2013A Van Buren Avenue
Indian Trail, NC 28079
(704) 882-4222
www.eagleonline.net

NO	DATE	BY	ISSUE

THE CARRINGTON FIRST COLONY, LLC PROPERTY
WAXHAW, UNION CO., N.C.

CERTIFY TO:
TRIBEK PROPERTIES
FIRST AMERICAN TITLE INSURANCE COMPANY

ALTA/NSPS SURVEY

DESIGNED BY	DRAWN BY	CHECKED BY	JOB NUMBER
n/a	FMH	RLW	5117
Scale	DATE		
1" = 40'	JUNE 5, 2017		

NORTH CAROLINA PROFESSIONAL SEAL L-3661 LAND SURVEYOR RUSSELL L. WHITEHURST
6/9/17

Sheet
C-1.0

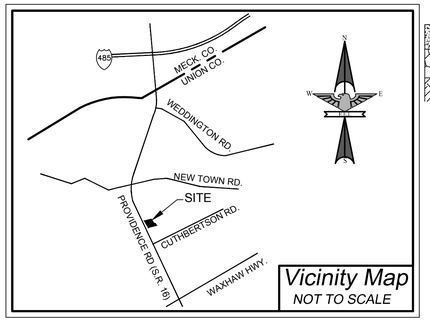

CONCRETE PAVEMENT SECTION

(TYPE I) HEAVY DUTY ASPHALT PAVING

(TYPE II) ASPHALT PAVING AUTOMOBILE PARKING AREAS

NOTE:
ASPHALT SHALL BE PROOF-ROLLED BEFORE THE FINAL LIFT IS PLACED, AND AS REQUIRED BY THE SPECIFICATIONS.

SITE DATA

PROPERTY OWNER:	TRIBEK PROPERTIES 2820 SELWYN AVENUE, SUITE 425 CHARLOTTE, NC 28209 CONTACT: BLANTON HAMILTON TELEPHONE: (704) 333-8484 EMAIL: bhamilton@tribek.com	DEVELOPER:	TRIBEK PROPERTIES 2820 SELWYN AVENUE, SUITE 425 CHARLOTTE, NC 28209 CONTACT: BLANTON HAMILTON TELEPHONE: (704) 333-8484 EMAIL: bhamilton@tribek.com

TOTAL SITE AREA:	8.96 AC. (GROSS, TO CL OF PROVIDENCE RD.) 8.01 AC ± (NET OF PROPOSED 50' R/W FROM CL OF PROVIDENCE RD AND RIGHT-OF-WAY DEDICATION FOR SUNSET HILL RD)
AREA COVERAGE:	IMPERVIOUS AREA PROPOSED BUILDINGS = ±0.99 AC (12% OF NET AREA) PROPOSED PAVEMENT / SIDEWALKS = ±3.11 AC (39% OF NET AREA) PERVIOUS AREA BUFFERS/LANDSCAPE/ OPEN SPACE = ±4.00 AC (51% OF NET AREA)
PROPERTY ADDRESS:	2913 PROVIDENCE ROAD SOUTH, WAXHAW, NC
EXISTING ZONING:	CD-C3
TAX PARCEL NO.:	06-162-018
DEED BOOK:	4003 PAGE 760
PROPOSED USE:	PARCEL 1 (1.59 AC) DAYCARE: ±11,727 SF PARCEL 2 (1.14 AC) GENERAL OFFICE: ±8,645 SF PARCEL 3 (2.35 AC) GROCERY STORE: ±18,850 SF PARCEL 4 (1.37 AC) FAST FOOD: ±3,886 SF PARCEL 5 (1.75 AC) BMP POND (C.O.A.)
PARKING ANALYSIS:	PARCEL 1 DAYCARE: (0.35 SPACES x 138 STUDENTS) - 20% = 39 SPACES REQUIRED 46 PROVIDED PARCEL 2 GENERAL OFFICE: ((3.6 SPACES / 1000) x 8,645 SF) - 20%= 25 SPACES REQUIRED 31 SPACES PROVIDED PARCEL 3 GROCERY STORE: ((6 SPACES / 1000 SF) x 18,850) - 20% = 91 SPACES REQUIRED 97 PROVIDED PARCEL 4 FAST FOOD: ((15 SPACES / 1000 SF) x 3,607) - 20% = 43 SPACES REQUIRED 43 PROVIDED TOTAL PARKING REQUIRED = 198 TOTAL PARKING PROVIDED = 212* *212 TOTAL SPACES (INCLUDING 10 HANDICAP ACCESSIBLE SPACES)
TREE SAVE ANALYSIS:	TOTAL LOT AREA = 8.96 AC TOTAL BUFFER AREA = 1.20 AC TOTAL RIGHT-OF-WAY DEDICATION = 0.95 AC (PROVIDENCE RD & SUNSET HILL RD) TOTAL INTERNAL AREA: 8.96 AC - 1.20 AC - 0.95 AC = 6.81 AC TREE SAVE REQUIRED: 6.81 AC x 0.10 (10%) = 0.68 AC 0.76 AC PROVIDED
SETBACKS:	FRONT SETBACK: 20' LANDSCAPE BUFFER REAR SETBACK: 25' CLASS "C" SETBACK SIDE SETBACK: 45' CLASS "B" SETBACK

GENERAL NOTES

1. OVERALL SITE IMPROVEMENTS SHALL BE CONSTRUCTED AS PART OF THE "CARRINGTON SQUARE" CONSTRUCTION DOCUMENTS.
2. PROJECT IS NOT LOCATED WITHIN A FLOOD PLAIN.
3. THE FUTURE BUILDINGS AND SITE LAYOUT SHOWN AS DASHED WILL NOT BE CONSTRUCTED UNDER THIS PERMIT.
4. THE SETBACK DIMENSIONS SHOWN ARE FOR TOWN REFERENCE.
5. THE PROPOSED MONUMENT SIGNS SHALL BE PERMITTED SEPARATELY.
6. HEAVY DUTY PAVEMENT SHALL BE TYPE I, AS NOTED, PER DETAIL THIS SHEET. PARKING AREAS SHALL BE TYPE II PAVEMENT PER DETAIL THIS SHEET.
7. ALL UNDISTURBED BUFFERS AND OPEN SPACE SHALL BE MAINTAINED BY THE PROPERTY OWNER.
8. ACCESS BETWEEN PARCELS SHALL BE GRANTED BY WAY OF BLANKET ACCESS EASEMENT AS INDICATED ON SUBDIVISION PLAT.
9. TREE LOCATIONS ARE APPROXIMATE AND SHALL BE ADJUSTED IN THE FIELD TO AVOID CONFLICTS WITH PROPOSED UTILITIES.
10. STREET & PARKING LOT LIGHTING SHOWN FOR REFERENCE ONLY. CONTRACTOR TO SUBMIT SHOP DRAWINGS FOR TOWN APPROVAL. BASE OF LIGHTS IN PARKING LOT TO BE AT JUNCTURE OF PARKING SPACES. SEE SHEET E-1.0 FOR PHOTOMETRICS PLAN.
11. TREE SAVE AREA WITHIN LIMITS OF ALDI CONSTRUCTION = 0.25 AC
12. ALL PROPOSED CURB WITHIN THE LIMITS OF CONSTRUCTION FOR ALDI SHALL BE 6" CURB WITH 18" GUTTER, PER TOWN OF WAXHAW STANDARD DETAIL 100.1.
13. ACCESSIBLE PARKING SIGNAGE SHALL BE INSTALLED PER TOWN OF WAXHAW STANDARD DETAIL 712.1.

LEGEND

- SITE IMPROVEMENTS PER "CARRINGTON SQUARE" CONSTRUCTION DOCUMENTS (NOT A PART)
- UNDISTURBED BUFFER (NOT TO BE DEVELOPED)
- TREE SAVE AREA (NOT TO BE DEVELOPED)
- PROPOSED TREE
- EXISTING PROPERTY LINE

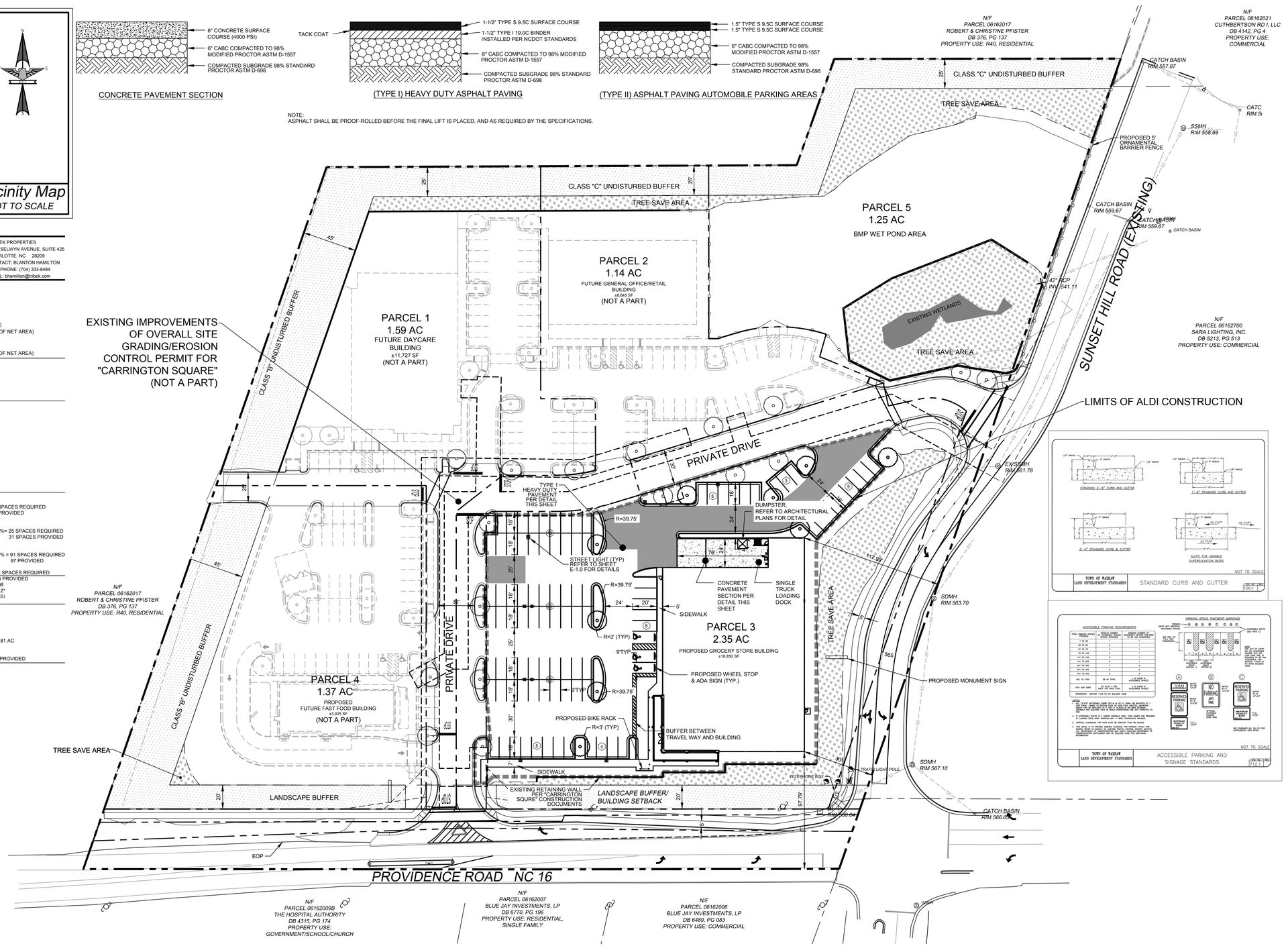

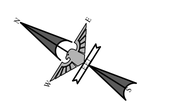

GRAPHIC SCALE

0 40' 80'

(IN FEET)
1 inch = 40 ft.

EAGLE ENGINEERING
FIRM LICENSE # C-0873
2013A Van Buren Avenue
Indian Trail, NC 28079
P.O. BOX 551
Alpharetta, GA 30009
(678) 339-0640
(704) 882-4222
www.eagleonline.net

NO.	DATE	BY	ISSUE
1	4-9-18	KEW	1st PLANCHECK REVISIONS PER TOWN & NCDOT
2	6-12-18	KEW	2nd PLANCHECK REVISIONS PER TOWN & NCDOT
3	8-1-18	KEW	3rd PLANCHECK REVISIONS PER TOWN & NCDOT

ALDI GROCERY STORE #06

TOWN OF WAXHAW, UNION COUNTY, NC

FOR THE BENEFIT OF:

ALDI, INC. - SALISBURY DIVISION
1985 OLD UNION CHURCH ROAD
SALISBURY, NC 28146

SITE PLAN OVERALL

DESIGNED BY	KEW	DRAWN BY	KEW
Scale	AS SHOWN	DATE	12-4-2017
CHECKED BY	JHR		
JOB NUMBER	6076		

NORTH CAROLINA PROFESSIONAL SEAL 14569 ENGINEER JOHNNY HOUSTON ROSS
2-26-18

Sheet
C-2.0

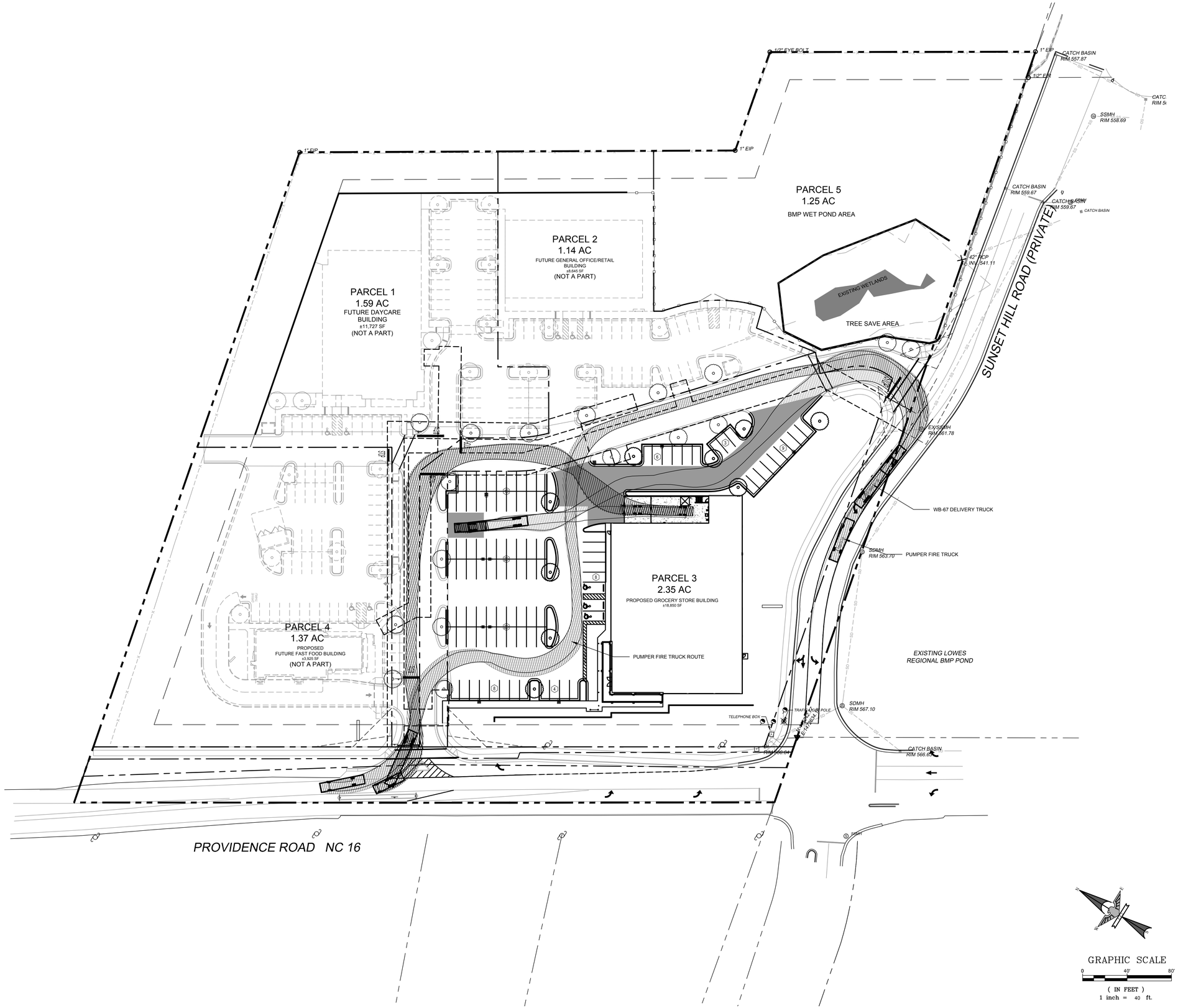

EAGLE ENGINEERING
FIRM LICENSE # C-0873
2013A Van Buren Avenue
Indian Trail, NC 28079
(704) 882-4222
P.O. BOX 551
Alpharetta, GA 30009
(678) 339-0640
www.eagleonline.net

NO.	DATE	BY	ISSUE
1	4-9-18	KEW	1st PLANCHECK REVISIONS PER TOWN & NCDOT
2	6-12-18	KEW	2nd PLANCHECK REVISIONS PER TOWN & NCDOT
3	8-1-18	KEW	3rd PLANCHECK REVISIONS PER TOWN & NCDOT

ALDI GROCERY STORE #06

TOWN OF WAXHAW, UNION COUNTY, NC

FOR THE BENEFIT OF:

ALDI, INC. - SALISBURY DIVISION
1985 OLD UNION CHURCH ROAD
SALISBURY, NC 28146

TRUCK MOVEMENT PLAN

DESIGNED BY	KEW	DRAWN BY	KEW
CHECKED BY	JHR	DATE	12-4-2017
Scale	AS SHOWN	JOB NUMBER	6076

NORTH CAROLINA PROFESSIONAL SEAL 14569 ENGINEER JOHNNY HOUSTON ROSS
2-26-18

Sheet
C-2.1

CONSTRUCTION NOTES & SEQUENCE:

THE CONTRACTOR IS RESPONSIBLE FOR ENSURING THAT EROSION IS MINIMIZED AND THAT COMPLIANCE WITH ALL APPLICABLE FEDERAL, STATE, AND LOCAL LAWS, REGULATIONS, AND ORDINANCES IS MAINTAINED THROUGHOUT EXECUTION OF THIS PROJECT.

1. CONTRACTOR TO SETUP AN ON-SITE PRE-CONSTRUCTION CONFERENCE WITH THE TOWN OF WAXHAW EROSION CONTROL INSPECTOR TO DISCUSS EROSION CONTROL MEASURES PRIOR TO BEGINNING ANY WORK. THE FINANCIALLY RESPONSIBLE PERSON IS RESPONSIBLE FOR THE INSTALLATION AND MAINTENANCE OF THE EROSION AND SEDIMENTATION CONTROLS.
2. INSTALL SILT FENCE & ASSOCIATED MEASURES PER PLAN TO ESTABLISH PERIMETER PROTECTION. INSTALL TREE PROTECTION MEASURES PER PLAN. TREE PROTECTION MEASURES SHALL REMAIN IN PLACE FOR THE ENTIRE DURATION OF CONSTRUCTION. INSPECT EXISTING INLET PROTECTION LEFT IN PLACE FROM PHASE 2 OF THE CARRINGTON SQUARE EROSION CONTROL MEASURES. REPLACE WEATHERED INLET PROTECTION AS NECESSARY. AN EROSION CONTROL INSPECTION IS REQUIRED.
3. AFTER SILT FENCE & ASSOCIATED MEASURES HAVE BEEN ESTABLISHED AND APPROVED BY THE TOWN OF WAXHAW EROSION CONTROL INSPECTOR, BEGIN GRADING OPERATIONS TO ESTABLISH PAVEMENT SUBGRADE AND FINAL PAD ELEVATION WITH APPROVED STRUCTURAL FILL MATERIAL. AS SITE IS BROUGHT TO FINAL GRADING, INSURE SOIL STABILIZATION MEASURES AND SEEDING SCHEDULE ARE FOLLOWED AS PER THE PLANS.
4. UPON NEAR COMPLETION OF GRADING OPERATIONS, INSTALL PROPOSED UTILITIES (WATER, SEWER LATERAL, STORM DRAIN, DRY UTILITIES, ETC.).
5. ONCE INSTALLATION OF EROSION CONTROL MEASURES ARE COMPLETE, CONTRACTOR IS TO CONTACT TOWN OF WAXHAW EROSION CONTROL INSPECTOR FOR AN INSPECTION.
6. CONTRACTOR TO COORDINATE INSPECTION AND APPROVAL BY THE TOWN OF WAXHAW EROSION CONTROL INSPECTOR.
7. SITE CONSTRUCTION AND GRADING CAN NOT BE STARTED ON THIS SITE UNTIL ALL STORMWATER INFRASTRUCTURE AND THE PHASE 2 SEDIMENT BASIN SHOWN ON THE CONSTRUCTION DOCUMENTS FOR CARRINGTON SQUARE HAVE BEEN INSTALLED, INSPECTED, AND APPROVED BY THEY TOWN OF WAXHAW.

GROUND STABILIZATION		
SITE AREA DESCRIPTION	STABILIZATION TIME FRAME	STABILIZATION TIME FRAME EXCEPTIONS
PERIMETER DIKES, SWALES, DITCHES AND SLOPES	7 DAYS	NONE
HIGH QUALITY WATER (HQW) ZONES	7 DAYS	NONE
SLOPES STEEPER THAN 3:1	7 DAYS	IF SLOPES ARE 10' OR LESS IN LENGTH AND ARE NOT STEEPER THAN 2:1, 14 DAYS ARE ALLOWED.
SLOPES 3:1 OR FLATTER	14 DAYS	7-DAYS FOR SLOPES GREATER THAN 50 FEET IN LENGTH.
ALL OTHER AREAS WITH SLOPES FLATTER THAN 4:1	14 DAYS	NONE (EXCEPT FOR PERIMETERS AND HQW ZONES)

*EXTENSIONS OF TIME MAY BE APPROVED BY THE PERMITTING AUTHORITY BASED ON WEATHER OR OTHER SITE-SPECIFIC CONDITIONS THAT MAKE COMPLIANCE IMPRACTICABLE." (SECTION II.B (2)(B)).

NOTE:
SLOPES STEEPER THAN 3:1 SHALL BE STABILIZED WITHIN 7 DAYS. SLOPES 3:1 OR FLATTER STABILIZATION SHALL BE PROVIDED WITHIN 14 DAYS.

EROSION CONTROL NOTES:

1. ALL TRAPS AND BASINS SHALL BE INSPECTED DAILY (MONDAY THROUGH FRIDAY) FOR EXCESSIVE SILT. CONTRACTOR SHALL REMOVE EXCESSIVE SILT FROM THE TRAPS IMMEDIATELY BEFORE CONSTRUCTION COMMENCES ON EACH WORKING DAY.AS NECESSARY. MAINTENANCE SHALL CONTINUE THROUGH COMPLETION OF THE PROJECT.
2. THE CONTRACTOR ENGAGED IN OR CONDUCTING THE LAND-DISTURBING ACTIVITY SHALL BE RESPONSIBLE FOR INSTALLING AND MAINTAINING ALL TEMPORARY AND PERMANENT EROSION AND SEDIMENT CONTROL MEASURES AND FACILITIES DURING THE DEVELOPMENT OF THIS SITE AS REQUIRED BY THE APPROVED PLAN. OPERATIONS AND MAINTENANCE CONDITIONS ARE INCLUDED IN THE PLAN OUTLINING HOW THE CONTRACTOR SHALL PROVIDE FOR OPERATIONS AND MAINTENANCE DURING CONSTRUCTION.
3. WITHIN SEVEN CALENDAR DAYS FOLLOWING SOIL DISTURBANCE OR RE-DISTURBANCE, ALL PERIMETER SEDIMENT CONTROLS SHALL BE INSTALLED AND TEMPORARY STABILIZATION MEASURES SHALL BE COMPLETED ON TOPSOIL STOCKPILES.
4. AREAS AT FINAL GRADE SHALL RECEIVE PERMANENT STABILIZATION MEASURES WITHIN SEVEN CALENDAR DAYS OF REACHING FINAL GRADE.
5. THE RESPONSIBILITY FOR MAINTAINING ALL PERMANENT EROSION AND SEDIMENT CONTROL MEASURES AND FACILITIES INCLUDING MEASURES IN EASEMENTS AND NCDOT RIGHT OF WAY. AFTER SITE LAND DISTURBING ACTIVITY SHALL BE THE PERSON OR ENTITY AS LISTED ON THE FINANCIAL RESPONSIBILITY FORM FOR THE PROJECT.
6. ADDITIONAL CONTROL DEVICES MAY BE REQUIRED DURING CONSTRUCTION IN ORDER TO CONTROL EROSION AND /OR OFF-SITE SEDIMENTATION.
7. RUNOFF FROM BUILDING PADS AND OTHER RELATIVELY LEVEL AREAS MUST BE DIVERTED BY USE OF A TEMPORARY DIVERSION DITCH AT THE TOP OF A FILL SLOPE TOWARDS EITHER A SLOPE DRAIN OR RIP-RAP LINED CHANNEL DOWN THE FILL SLOPE. THE SLOPE DRAIN OR RIP-RAP LINED CHANNEL SHALL REMAIN IN PLACE UNTIL THE FILL SLOPE HAS BEEN ADEQUATELY STABILIZED WITH ESTABLISHED VEGETATION.
8. SILT FENCE SHALL BE A MINIMUM OF 10 FT OFF THE PROPOSED TOE OF SLOPE TO PROVIDE SPACE FOR MAINTENANCE AND SEDIMENT-STORAGE TO THE MAXIMUM EXTENT POSSIBLE.
9. GRADED SLOPES AND FILLS SHALL BE PROTECTED WITH A ROLLED EROSION CONTROL PRODUCT MEETING REQUIREMENTS OF NCDEQ "STANDARDS AND SPECIFICATIONS", SECTION 6.17, AND THE THE TOWN'S SEDIMENTATION AND EROSION CONTROL INSPECTOR; FOR ROLLED EROSION CONTROL PRODUCTS, IF COMPLETED OUTSIDE OPTIMUM GERMINATION SEASONS, WHEN UNFAVORABLE WEATHER CONDITIONS PREVENT ESTABLISHMENT OF VEGETATION GROUND COVER
10. PERSON RESPONSIBLE FOR LAND DISTURBING ACTIVITY IS TO MAKE SURE THE APPROVED EROSION CONTROL PLAN IS FOLLOWED. INSPECTION REPORTS ARE REQUIRED.
11. SILT FENCE STONE OUTLETS ARE NOT INTENDED TO FUNCTION AS A MEASURE IN LIEU OF A SEDIMENT TRAP OR BASIN, AND OFFER NO FILTRATION VALUE FOR RETENTION OF SEDIMENT. PRIMARY PURPOSE IS TO PREVENT SILT FENCE LAY DOWN FOR SMALL RETENTION AREAS. STONE OUTLETS SHOULD BE PLACED 1.0 FT. ABOVE THE LOWEST ELEVATION OF A FENCED AREA AS TO PREVENT PONDING BEHIND SILT FENCES THAT EXCEED 1.0 FT.
12. ALL MUD AND OBJECTIONABLE MATERIAL WILL BE REMOVED FROM STREETS IMMEDIATELY PER THE TOWN OF WAXHAW EROSION CONTROL ORDINANCE.
13. SELF INSPECTION IS REQUIRED ONCE A WEEK AND AFTER EVERY 1/2" RAIN EVENT. SELF INSPECTION REPORTS ARE REQUIRED TO BE KEPT ON SITE AND AVAILABLE AT ALL TIMES TO THE TOWN'S SEDIMENTATION AND EROSION CONTROL INSPECTOR.

NOTE:
ANY OFF-SITE BORROW AND WASTE REQUIRED FOR THIS PROJECT MUST COME FROM A SITE WITH AN APPROVED EROSION CONTROL PLAN. A SITE REGULATED UNDER MINING ACT OF 1971, OR A LANDFILL REGULATED BY THE DIVISION OF SOLID WASTE MANAGEMENT. TRASH/DEBRIS FROM DEMOLITION ACTIVITIES OR GENERATED BY ANY ACTIVITIES ON SITE MUST BE DISPOSED OF AT A FACILITY REGULATED BY THE DIVISION OF SOLID WASTE MANAGEMENT OR PER DIVISION OF SOLID WASTE MANAGEMENT OR DIVISION OF WATER RESOURCES RULES AND REGULATIONS.

ADDITIONAL EROSION CONTROL NOTES:

1. AS REQUIRED BY THE NPDES GENERAL PERMIT NCG010000, ALL PERIMETER DIKES, SWALES, DITCHES, PERIMETER SLOPES AND ALL SLOPES STEEPER THAN 3 HORIZONTAL TO 1 VERTICAL (3:1) SHALL BE PROVIDED TEMPORARY OR PERMANENT STABILIZATION WITH GROUND COVER AS SOON AS PRACTICABLE BUT IN ANY EVENT WITHIN 7 CALENDAR DAYS FROM THE LAST LAND DISTURBING ACTIVITY. ALL OTHER DISTURBED AREAS SHALL BE PROVIDED TEMPORARY OR PERMANENT STABILIZATION WITH GROUND COVER AS SOON AS PRACTICABLE BUT IN ANY EVENT WITHIN 14 CALENDAR DAYS FROM THE LAST LAND DISTURBING ACTIVITY. GROUND STABILIZATION TIMEFRAME EXEMPTIONS CAN BE FOUND IN THE NPDES GENERAL PERMIT NCG010000 UNDER SECTION 2.B. GROUND STABILIZATION.
2. NO LAND DISTURBING ACTIVITY, EXCEPT THAT WHICH IS REQUIRED TO INSTALL EROSION CONTROL MEASURES, MAY COMMENCE PRIOR TO APPROVAL BY THE DIRECTOR OF DEVELOPMENT SERVICES.
3. ADDITIONAL EROSION CONTROL MEASURES MAY BE REQUIRED BASED UPON SPECIFIC SITE CONDITIONS.
4. CONTACT THE TOWN OF WAXHAW DEVELOPMENT SERVICES DEPARTMENT, AT 704-843-2195, FOR A PRE-CONSTRUCTION MEETING PRIOR TO ANY LAND DISTURBING ACTIVITY.
5. REMOVE ALL TEMPORARY EROSION CONTROL DEVICES AND STRUCTURES ONLY AFTER SITE IS FULLY STABILIZED AND APPROVAL HAS BEEN OBTAINED FROM THE TOWN OF WAXHAW DEVELOPMENT SERVICES DEPARTMENT.
6. ALL EROSION CONTROL DESIGNS SHALL BE IN ACCORDANCE WITH THE TOWN OF WAXHAW ENGINEERING, STANDARDS AND PROCEDURES MANUAL, AND THE NCDEQ EROSION AND SEDIMENTATION CONTROL PLANNING AND DESIGN MANUAL, LATEST EDITION.
7. FOR PHASED EROSION CONTROL PLANS, THE CONTRACTOR SHALL MEET WITH THE EROSION CONTROL SPECIALIST PRIOR TO COMMENCING EACH PHASE OF EROSION CONTROL MEASURES.
8. SITE GRADING IS TO BE COVERED UNDER THE GENERAL STORMWATER PERMIT NCG010000. ANY LAND DISTURBING ACTIVITY > 1 ACRE REQUIRES COMPLIANCE WITH ALL CONDITIONS OF THIS GENERAL PERMIT UNDER THE NPDES. ANY NONCOMPLIANCE IS A VIOLATION OF THE CLEAN WATER ACT AND MAY REQUIRE ENFORCEMENT BY NCDEQ.
9. CONTRACTOR IS TO KEEP STREET CLEAR OF MUD AND OTHER DEBRIS.
10. THE PROFESSIONAL ENGINEER REGISTERED WITH THE STATE OF NORTH CAROLINA WHO PREPARED THE EROSION CONTROL PLAN IS SOLELY RESPONSIBLE FOR IDENTIFICATION AND LOCATION OF ALL ENVIRONMENTAL WETLANDS, PERENNIAL AND INTERMITTENT STREAMS AND BUFFERS SHOWN ON THE PLANS.
11. THE TOWN OF WAXHAW IS NOT RESPONSIBLE FOR THE ACCURACY AND ADEQUACY OF THE DESIGN, DIMENSIONS, AND ELEVATIONS, WHICH SHALL BE CONFIRMED AND CORRELATED AT THE JOB SITE. THE TOWN OF WAXHAW, THROUGH THE APPROVAL OF THIS DOCUMENT, ASSUMES NO RESPONSIBILITY FOR THE COMPLETENESS AND/OR ACCURACY OF THIS DOCUMENT.
12. SILT SACKS WILL BE PLACED IN BASINS/INLETS ALONG ROADWAYS AFTER INITIAL ASPHALT SURFACE WORK IS COMPLETED.
13. THE FINANCIALLY RESPONSIBLE PARTY/AGENT OR THE LANDOWNER/AGENT OF A LAND DISTURBING ACTIVITY > ONE ACRE IS REQUIRED TO SELF-INSPECT THE PROJECT. A SELF INSPECTION, AS WELL AS DOCUMENTATION OF A PROJECT AFTER EACH PHASE OF THE PROJECT, IS REQUIRED.

LEGEND

- —ELEV— EXISTING CONTOUR
- —ELEV— PROPOSED CONTOUR
- LIMITS OF DISTURBANCE
- PROPOSED SILT FENCE
- EXISTING INLET PROTECTION
- PROPOSED TREE PROTECTION AREA

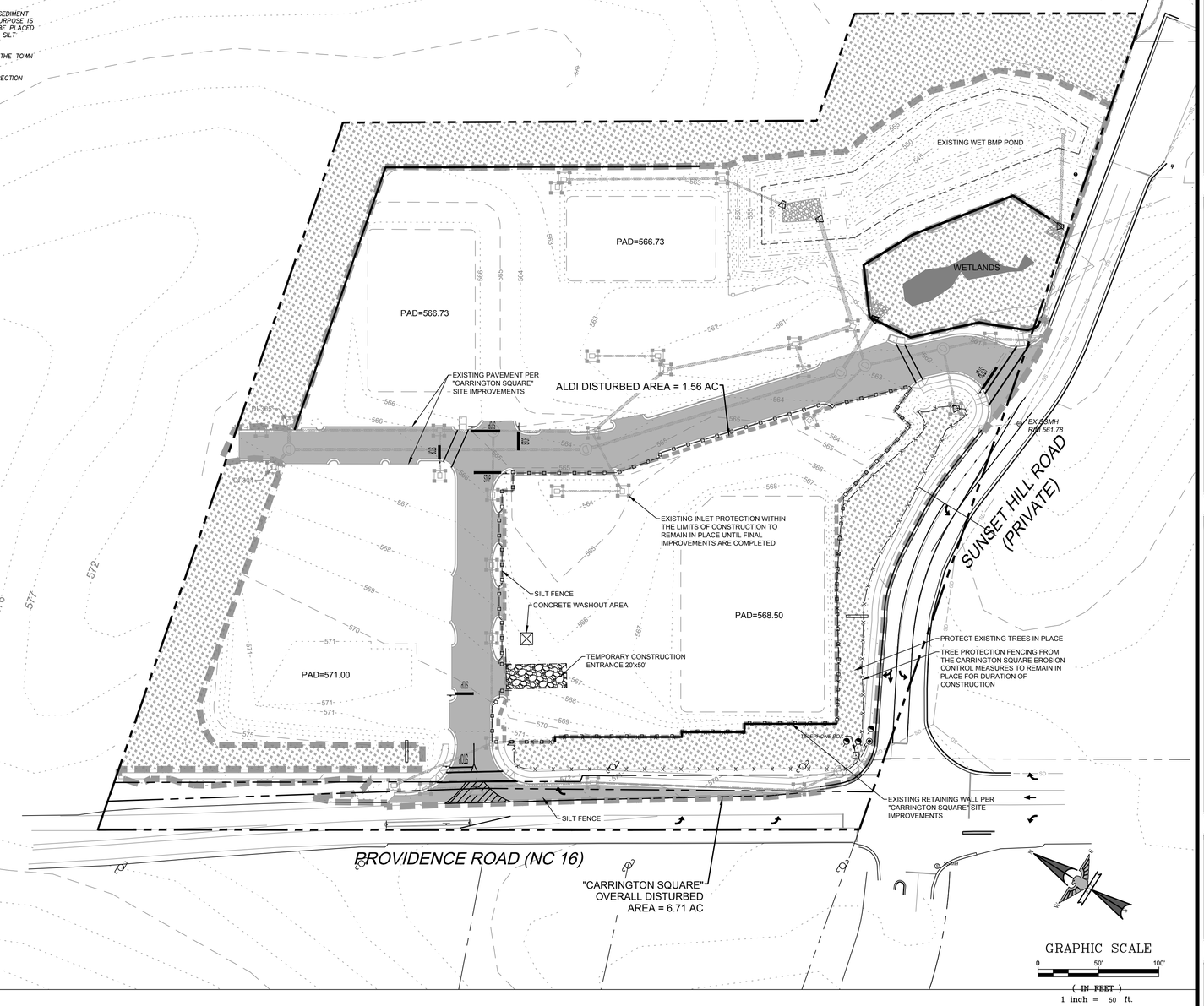

EAGLE ENGINEERING
FIRM LICENSE # C-0873
2013A Van Buren Avenue
Indian Trail, NC 28079
(704) 882-4222
P.O. BOX 551
Alpharetta, GA 30009
(678) 339-0640
www.eagleonline.net

NO.	DATE	BY	ISSUE
1	4-9-18	KEW	1st PLANCHECK REVISIONS PER TOWN & NCDOT
2	6-12-18	KEW	2nd PLANCHECK REVISIONS PER TOWN & NCDOT
3	8-1-18	KEW	3rd PLANCHECK REVISIONS PER TOWN & NCDOT

ALDI GROCERY STORE #06

TOWN OF WAXHAW, UNION COUNTY, NC

FOR THE BENEFIT OF:

ALDI, INC. - SALISBURY DIVISION
1985 OLD UNION CHURCH ROAD
SALISBURY, NC 28146

EROSION CONTROL PLAN

DESIGNED BY	DRAWN BY	CHECKED BY
KEW	KEW	JHR
Scale	DATE	JOB NUMBER
AS SHOWN	12-4-2017	6076

NORTH CAROLINA PROFESSIONAL SEAL 14069 ENGINEER JOHNNY HOUSTON ROSS
2-26-18

Sheet
C-3.0

NOTES:

1. A STABILIZED ENTRANCE PAD OF #5 WASHED STONE AND RAILROAD BALLAST SHALL BE LOCATED WHERE TRAFFIC WILL ENTER OR LEAVE THE CONSTRUCTION SITE ONTO A PUBLIC STREET.
2. FILTER FABRIC OR COMPACTED CRUSHER RUN STONE SHALL BE USED AS A BASE FOR THE CONSTRUCTION ENTRANCE.
3. THE ENTRANCE SHALL BE MAINTAINED IN A CONDITION WHICH WILL PREVENT TRACKING OR FLOWING OF SEDIMENT ONTO PUBLIC STREETS OR EXISTING PAVEMENT. THIS MAY REQUIRE PERIODIC TOP DRESSING WITH ADDITIONAL STONE AS CONDITIONS WARRANT AND REPAIR OR CLEANOUT OF ANY MEASURES USED TO TRAP SEDIMENT.
4. ANY SEDIMENT SPILLED, DROPPED, WASHED, OR TRACKED ONTO PUBLIC STREETS MUST BE REMOVED IMMEDIATELY. ANY AGGREGATE TRACKED INTO THE ROADWAY MUST BE SWEPT BACK ONSITE ON A NIGHTLY BASIS.
5. WHEN APPROPRIATE, WHEELS MUST BE CLEANED TO REMOVE SEDIMENT PRIOR TO ENTERING A PUBLIC STREET. WHEN WASHING IS REQUIRED, IT SHALL BE DONE IN AN AREA STABILIZED WITH CRUSHED STONE WHICH DRAINS INTO AN APPROVED SEDIMENT BASIN SEE STD. NO. 515.1
6. THE TOWN MAY REQUIRE A STANDARD COMMERCIAL DRIVEWAY (STD. 108.1 & 109.1) TO ACCESS THE CONSTRUCTION SITE IF THE DRIVEWAY IS ON A THOROUGHFARE.

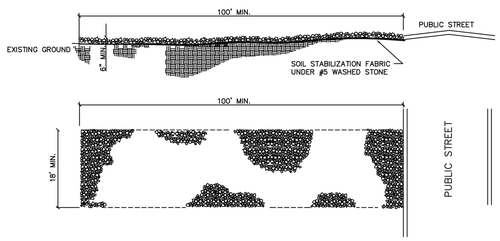

NOT TO SCALE

TOWN OF WAXHAW LAND DEVELOPMENT STANDARDS	STABILIZED CONSTRUCTION ENTRANCE	STD. NO. 514.1	REV.

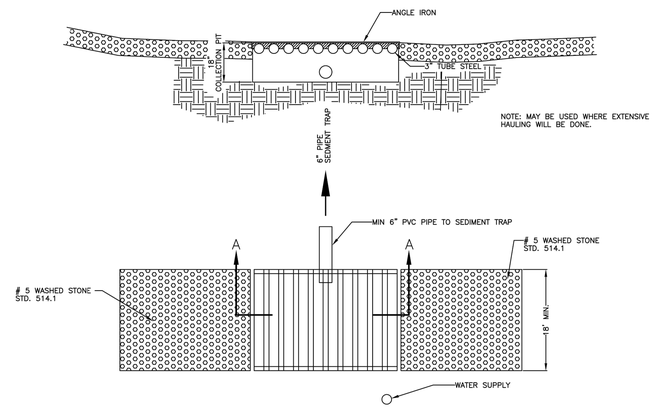

NOT TO SCALE

TOWN OF WAXHAW LAND DEVELOPMENT STANDARDS	CONSTRUCTION ENTRANCE TIRE WASH	STD. NO. 515.1	REV.

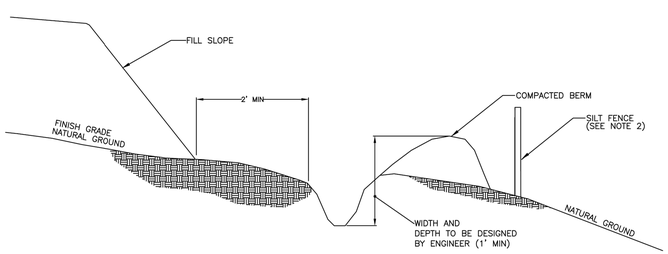

NOTE:

1. DITCH SHOULD HAVE LONGITUDINAL SLOPE OF 1%.
2. SILT FENCE MAY BE REQUIRED BEHIND BERM

NOT TO SCALE

TOWN OF WAXHAW LAND DEVELOPMENT STANDARDS	TEMPORARY SILT DITCH	STD. NO. 506.1	REV.

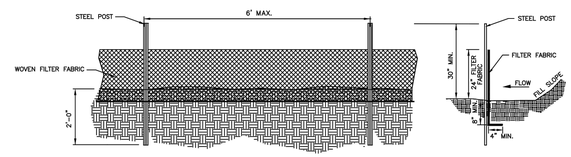

GENERAL NOTES:

1. WOVEN FILTER FABRIC BE USED WHERE SILT FENCE IS TO REMAIN FOR A PERIOD OF MORE THAN 30 DAYS.
2. STEEL POSTS SHALL BE 5'-0" IN HEIGHT AND BE OF THE SELF-FASTENER ANGLE STEEL TYPE.
3. TURN SILT FENCE UP SLOPE AT ENDS.
4. ORANGE SAFETY FENCE IS REQUIRED AT BACK OF SILT FENCE WHEN GRADING IS ADJACENT TO SWIM BUFFERS, STREAMS OR WETLANDS (REFER TO SWIM BUFFER GUIDELINES). THE COLOR ORANGE IS RESERVED FOR VISUAL IDENTIFICATION OF ENVIRONMENTALLY SENSITIVE AREAS.
5. DRAINAGE AREA CAN NOT BE GREATER THAN 1/4 ACRE PER 100 FT OF FENCE.
6. SLOPE LENGTHS CAN NOT EXCEED CRITERIA SHOWN IN TABLE 6.62A NORTH CAROLINA EROSION AND SEDIMENT CONTROL PLANNING AND DESIGN MANUAL.
7. DO NOT INSTALL SEDIMENT FENCE ACROSS STREAMS, DITCHES, WATERWAYS OR OTHER AREAS OF CONCENTRATED FLOW.

MAINTENANCE NOTES:

1. FILTER BARRIERS SHALL BE INSPECTED BY THE FINANCIALLY RESPONSIBLE PARTY OR HIS AGENT IMMEDIATELY AFTER EACH RAINFALL AND AT LEAST DAILY DURING PROLONGED RAINFALL. ANY REPAIRS NEEDED SHALL BE MADE IMMEDIATELY.
2. SHOULD THE FABRIC DECOMPOSE OR BECOME INEFFECTIVE PRIOR TO THE END OF THE EXPECTED USABLE LIFE AND THE BARRIER STILL IS NECESSARY, THE FABRIC SHALL BE REPLACED PROMPTLY.
3. SEDIMENT DEPOSITS SHOULD BE REMOVED WHEN DEPOSITS REACH APPROX. HALF THE HEIGHT OF THE BARRIER. ANY SEDIMENT DEPOSITS REMAINING IN PLACE AFTER THE SILT FENCE IS REMOVED SHALL BE DRESSED TO CONFORM TO THE EXISTING GRADE, PREPARED AND SEEDED.

NOT TO SCALE

TOWN OF WAXHAW LAND DEVELOPMENT STANDARDS	TEMPORARY SILT FENCE	STD. NO. 507.1	REV.

EAGLE ENGINEERING
FIRM LICENSE # C-0873
2013A Van Buren Avenue
Indian Trail, NC 28079
(704) 882-4222
P.O. BOX 551
Alpharetta, GA 30009
(678) 339-0640
www.eagleonline.net

NO.	DATE	BY	ISSUE
1	4-9-18	KEW	1st PLANCHECK REVISIONS PER TOWN & NCDOT
2	6-12-18	KEW	2nd PLANCHECK REVISIONS PER TOWN & NCDOT
3	8-1-18	KEW	3rd PLANCHECK REVISIONS PER TOWN & NCDOT

ALDI GROCERY STORE #06
TOWN OF WAXHAW, UNION COUNTY, NC
FOR THE BENEFIT OF:
ALDI, INC. - SALISBURY DIVISION
1985 OLD UNION CHURCH ROAD
SALISBURY, NC 28146

EROSION CONTROL DETAILS

DESIGNED BY	KEW	DRAWN BY	KEW	CHECKED BY	JHR
Scale	AS SHOWN	DATE	12-4-2017	JOB NUMBER	6076

NORTH CAROLINA PROFESSIONAL SEAL 14969 ENGINEER JUNIOR HOUSTON ROSS
2-26-18

Sheet
C-3.1

NOTES:

1. INLET MAINTENANCE SHALL BE DOCUMENTED IN PROJECT LOG BOOK.
2. FILTER TYPES SHALL BE APPROVED BY THE TOWN INSPECTOR PRIOR TO INSTALLATION.
3. FILTER BAGS MAY BE REMOVED WHEN SITE IS STABILIZED AT THE DIRECTION OF THE ENGINEER.
4. FILTER BAGS SHALL BE REMOVED PRIOR TO STREET ACCEPTANCE AND/OR CLOSE OUT OF GRADING PERMIT.
5. FILTER BAGS SHALL BE CLEANED OR REPLACED ON A REGULAR BASIS (NOT BE MORE THAN HALF FULL AT ANY TIME).
6. FILTER BAGS MAY BE INSTALLED IN EXISTING TOWN OR NCDOT ROADS AS LONG AS STORM DRAINAGE IS NOT IMPEDED.

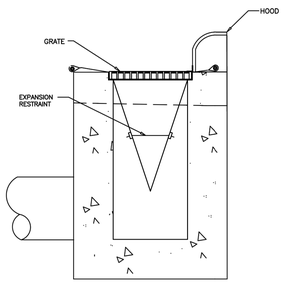

SECTION

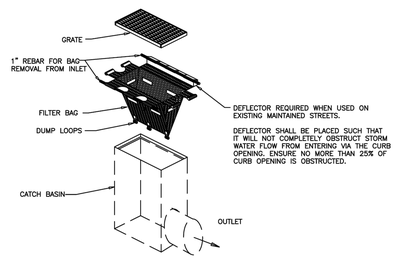

INSTALLATION

NOT TO SCALE

TOWN OF WAXHAW LAND DEVELOPMENT STANDARDS	CATCH BASIN INLET PROTECTION	STD. NO. 519.1	REV.

GENERAL NOTES:

1. UNIFORMLY GRADE A SHALLOW DEPRESSION APPROACHING THE INLET.
2. DRIVE 5-FOOT STEEL POSTS 2 FEET INTO THE GROUND SURROUNDING THE INLET. SPACE POSTS EVENLY AROUND THE PERIMETER OF THE INLET, A MAXIMUM OF 4 FEET APART.
3. SURROUND THE POSTS WITH WIRE MESH HARDWARE CLOTH. SECURE THE WIRE MESH TO THE STEEL POSTS AT THE TOP, MIDDLE, AND BOTTOM. PLACING A 2-FOOT FLAP OF THE WIRE MESH UNDER THE GRAVEL FOR ANCHORING IS RECOMMENDED.
4. PLACE CLEAN GRAVEL (NC DOT #5 OR #57 STONE) ON A 2:1 SLOPE WITH A HEIGHT OF 16 INCHES AROUND THE WIRE, AND SMOOTH TO AN EVEN GRADE.
5. ONCE THE CONTRIBUTING DRAINAGE AREA HAS BEEN STABILIZED, REMOVE ACCUMULATED SEDIMENT, AND ESTABLISH FINAL GRADING ELEVATIONS.
6. COMPACT THE AREA PROPERLY AND STABILIZED IT WITH GROUNDCOVER.

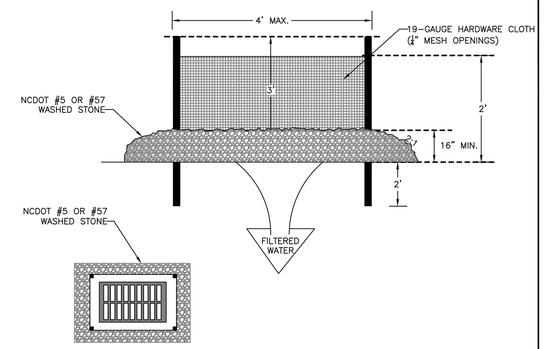

NOT TO SCALE

TOWN OF WAXHAW LAND DEVELOPMENT STANDARDS	HARDWARE CLOTH AND GRAVEL INLET PROTECTION	STD. NO. 512.1	REV.

EAGLE ENGINEERING
FIRM LICENSE # C-0873
2013A Van Buren Avenue
Indian Trail, NC 28079
(704) 882-4222
P.O. BOX 551
Alpharetta, GA 30009
(678) 339-0640
www.eagleonline.net

NO.	DATE	BY	ISSUE
1	4-9-18	KEW	1st PLANCHECK REVISIONS PER TOWN & NCDOT
2	6-12-18	KEW	2nd PLANCHECK REVISIONS PER TOWN & NCDOT
3	8-1-18	KEW	3rd PLANCHECK REVISIONS PER TOWN & NCDOT

ALDI GROCERY STORE #06
TOWN OF WAXHAW, UNION COUNTY, NC

FOR THE BENEFIT OF:
ALDI, INC. - SALISBURY DIVISION
1985 OLD UNION CHURCH ROAD
SALISBURY, NC 28146

EROSION CONTROL DETAILS

DESIGNED BY	KEW	DRAWN BY	KEW	CHECKED BY	JHR
Scale	AS SHOWN	DATE	12-4-2017	JOB NUMBER	6076

NORTH CAROLINA PROFESSIONAL SEAL 14069 ENGINEER JOHNNY HOUSTON ROSS
2-26-18

Sheet
C-3.2

CONSTRUCTION NOTES:

I. MISCELLANEOUS

A. CURRENT EDITIONS OF THE NORTH CAROLINA DOT ROADWAY STANDARD DRAWINGS AND SPECIFICATIONS MANUAL SHALL BE CONSIDERED PART OF THESE PLANS.
B. THE CONTRACTOR SHALL BECOME FAMILIAR WITH THE PERMIT AND INSPECTION REQUIREMENTS SPECIFIED BY THE VARIOUS GOVERNMENTAL AGENCIES, THE ENGINEER, AND THE ARCHITECT. THE CONTRACTOR SHALL OBTAIN ALL NECESSARY PERMITS PRIOR TO CONSTRUCTION, AND SHALL SCHEDULE ANY NECESSARY INSPECTIONS ACCORDING TO AGENCY INSTRUCTIONS.
C. ALL SPECIFICATIONS AND DOCUMENTS REFERRED TO IN THESE PLANS SHALL BE OF THE LATEST REVISION.
D. ALL WORK PERFORMED SHALL COMPLY WITH THE REGULATIONS AND ORDINANCES OF THE VARIOUS GOVERNMENTAL AGENCIES HAVING JURISDICTION OVER THE WORK.
E. WORK PERFORMED UNDER THIS CONTRACT SHALL INTERFACE SMOOTHLY WITH OTHER WORK BEING PERFORMED ON SITE BY OTHER CONTRACTORS AND UTILITY COMPANIES. THE CONTRACTOR SHALL COORDINATE AND SCHEDULE HIS ACTIVITIES, WHERE NECESSARY, WITH OTHER CONTRACTORS AND UTILITY COMPANIES.
F. THE WATER AND SANITARY SEWER FACILITIES ARE SUBJECT TO REVIEW BY **UNION COUNTY PUBLIC WORKS** AND APPROVAL. STORM DRAINAGE FACILITIES ARE SUBJECT TO THE REVIEW AND APPROVAL OF THE **THE TOWN OF WAXHAW AND NCDOT** AND IT SHALL BE THE RESPONSIBILITY OF THE CONTRACTOR TO OBTAIN THE REQUIRED PERMITS TO PERFORM WORK IN THE PUBLIC RIGHT-OF-WAY.
G. GRADING OFF SITE WILL REQUIRE A LETTER OF PERMISSION FROM THE TOWN OF WAXHAW PRIOR TO ANY LAND DISTURBING ACTIVITIES.
H. ALL CONSTRUCTION SHALL COMPLY WITH THE LATEST EDITION OF THE **TOWN OF WAXHAW, UCPW, AND NCDOT STANDARDS.**
I. THE **TOWN OF WAXHAW RESERV**ES THE RIGHT TO INSPECT ALL CONSTRUCTION WITHIN THE PUBLIC RIGHT-OF-WAY, PUBLIC STORM DRAIN EASEMENTS, DETENTION AND WATER QUALITY BMP'S. THE **TOWN OF WAXHAW HAS TH**E ABILITY TO APPROVE OR REJECT ANY WORK COMPLETED OR ONGOING BY THE CONTRACTOR AT THE DEVELOPER'S EXPENSE.

II. SAFETY

A. DURING THE CONSTRUCTION AND MAINTENANCE OF THIS PROJECT, ALL SAFETY REGULATIONS SHALL BE ENFORCED. THE CONTRACTOR OR HIS REPRESENTATIVE SHALL BE RESPONSIBLE FOR THE CONTROL AND SAFETY OF THE TRAVELING PUBLIC AND THE SAFETY OF HIS PERSONNEL.
B. THE CONTRACTOR'S MAINTENANCE OF TRAFFIC PLAN MUST BE SUBMITTED AND APPROVED BY **TOWN OF WAXHAW** AND **EAGLE ENGINEERING** PRIOR TO BEGINNING ANY CONSTRUCTION ACTIVITIES.
C. LABOR SAFETY REGULATIONS SHALL CONFORM TO THE PROVISIONS SET FORTH BY OSHA IN THE FEDERAL REGISTER OF THE DEPARTMENT OF TRANSPORTATION.
D. CONTRACTOR SHALL PROVIDE AND MAINTAIN HIS OWN SAFETY EQUIPMENT IN ACCORDANCE WITH HIS HEALTH & SAFETY PROGRAM AND ALL OTHER APPLICABLE LEGAL AND HEALTH AND SAFETY REQUIREMENTS. THE CONTRACTOR IS ALSO RESPONSIBLE FOR PROVIDING ITS EMPLOYEES AND SUB CONTRACTORS WITH ADEQUATE INFORMATION AND TRAINING TO ENSURE THAT ALL EMPLOYEES AND SUB CONTRACTORS AND SUB CONTRACTOR'S EMPLOYEES COMPLY WITH ALL APPLICABLE REQUIREMENTS. CONTRACTOR SHALL REMAIN IN COMPLIANCE WITH ALL OCCUPATION SAFETY AND HEALTH REGULATIONS AS WELL AS THE ENVIRONMENTAL PROTECTION LAWS. THE FOLLOWING IS NOT TO BE PERCEIVED AS THE ENTIRE SAFETY PROGRAM BUT JUST BASIC REQUIREMENTS.
E. ALL EXCAVATIONS BY THE CONTRACTOR SHALL CONFORM TO THE REQUIREMENTS OF THE DEPARTMENT OF LABOR'S OCCUPATIONAL SAFETY AND HEALTH ADMINISTRATION RULES AND REGULATIONS. PARTICULAR ATTENTION MUST BE PAID TO THE CONSTRUCTION STANDARDS FOR EXCAVATIONS, 29 CFR PART 1926, SUBPART P.
F. THE MINIMUM STANDARDS AS SET FORTH IN THE CURRENT EDITION OF "MANUAL ON UNIFORM TRAFFIC CONTROL DEVICES" (U.S. DOT) SHALL BE FOLLOWED IN THE DESIGN APPLICATION, INSTALLATION, MAINTENANCE AND REMOVAL OF ALL TRAFFIC CONTROL DEVICES, WARNING DEVICES AND BARRIERS NECESSARY TO PROTECT THE PUBLIC AND WORKMEN FROM HAZARDS WITHIN THE PROJECT LIMITS.
G. ALL TRAFFIC CONTROL MARKINGS AND DEVICES SHALL CONFORM TO THE PROVISIONS SET FORTH IN THE MANUAL ON UNIFORM TRAFFIC CONTROL DEVICES PREPARED BY THE U.S. DEPARTMENT OF TRANSPORTATION FEDERAL HIGHWAY ADMINISTRATION.
H. IT SHALL BE THE SOLE RESPONSIBILITY OF THE CONTRACTOR TO COMPLY AND ENFORCE ALL APPLICABLE SAFETY REGULATIONS. THE ABOVE INFORMATION HAS BEEN PROVIDED FOR THE CONTRACTOR'S INFORMATION ONLY AND DOES NOT IMPLY THAT THE OWNER OR ENGINEER WILL INSPECT AND/OR ENFORCE SAFETY REGULATIONS.
I. THE CONTRACTOR SHALL EXERCISE EXTREME CAUTION IN AREAS OF BURIED UTILITIES AND SHALL PROVIDE AT LEAST 48 HOURS NOTICE TO THE UTILITY COMPANIES PRIOR TO CONSTRUCTION TO OBTAIN FIELD LOCATIONS OF EXISTING UNDERGROUND UTILITIES.
J. THE CONTRACTOR IS RESPONSIBLE FOR REPAIRING ANY DAMAGE TO EXISTING FACILITIES, ABOVE OR BELOW GROUND, THAT MAY OCCUR AS A RESULT OF THE WORK PERFORMED BY THE CONTRACTOR CALLED FOR IN THIS CONTRACT.
K. ALL UNDERGROUND UTILITIES MUST BE IN PLACE AND TESTED OR INSPECTED PRIOR TO BASE AND PAVEMENT CONSTRUCTION.

III. SITE PLAN AND COORDINATE GEOMETRY

A. PRELIMINARY ARCHITECTURAL BUILDING, AND PLUMBING PLANS **HAVE NOT** BEEN RECEIVED BY EEI.
B. SITE PLAN PREPARED BY EEI.
C. STRUCTURAL PLANS **HAVE NOT** BEEN RECEIVED BY EEI.
D. ELECTRICAL, MECHANICAL, AND FIRE SAFETY PLANS **HAVE NOT** BEEN RECEIVED BY EEI.
E. BOUNDARY SURVEY & TOPOGRAPHIC SURVEY PREPARED BY **EAGLE ENGINEERING, INC.**
F. ALL POINTS AND MONUMENTS SHALL BE SURVEYED UPON MOBILIZATION TO VERIFY THEIR ACCURACY. ANY DISCREPANCIES DISCOVERED MUST BE BROUGHT TO THE ATTENTION OF THE ENGINEER IN WRITING.
G. MONUMENTS AND OTHER SURVEY CONTROL POINTS SHALL BE PROTECTED FROM DAMAGE AND DISTURBANCE. IF ANY CONTROL POINTS ARE DAMAGED OR DISTURBED, IT SHALL BE THE RESPONSIBILITY OF THE CONTRACTOR TO NOTIFY THE ENGINEER AND REPLACE THE CONTROL POINTS TO THEIR ORIGINAL CONDITION AT HIS OWN EXPENSE.
H. ALL ELEVATIONS REFER TO THE NATIONAL GEODETIC VERTICAL DATUM.
I. LOCATIONS, ELEVATIONS, AND DIMENSIONS OF EXISTING UTILITIES, STRUCTURES AND OTHER FEATURES ARE SHOWN ACCORDING TO THE BEST INFORMATION AVAILABLE AT THE TIME OF PREPARATION OF THESE PLANS. THE CONTRACTOR SHALL VERIFY THE LOCATIONS, ELEVATIONS AND DIMENSIONS OF ALL EXISTING UTILITIES, STRUCTURES AND OTHER FEATURES AFFECTING THIS WORK PRIOR TO CONSTRUCTION.
J. UPON COMPLETION OF CONSTRUCTION, THE CONTRACTOR SHALL FURNISH OWNER'S ENGINEER WITH COMPLETE "AS-BUILT" INFORMATION CERTIFIED BY A REGISTERED LAND SURVEYOR. THIS "AS-BUILT INFORMATION SHALL BE PRODUCED ON AUTOCAD VERSION 12, OR LATER, AND UPON COMPLETION, THE CONTRACTOR SHALL FURNISH EAGLE ENGINEERING WITH DISKS OF ALL DRAWINGS, ONE SET OF REPRODUCIBLE MYLARS, AND FIVE SETS OF BLUEPRINTS. THE "AS-BUILT" INFORMATION SHALL CLEARLY AND ACCURATELY REPRESENT ALL CONSTRUCTED ITEMS INCLUDING, BUT NOT LIMITED TO:
   1. ELEVATIONS OF ALL STORM SEWER AND SANITARY SEWER STRUCTURE BOTTOMS, TOPS, AND INVERTS.
   2. FIELD MEASURED LENGTHS OF PIPES FOR ALL INSTALLED UTILITIES, CONDUITS, SLEEVES, ETC.
   3. LOCATIONS OF ALL STRUCTURES, PIPES, CONDUITS, SLEEVES, ETC.
   4. CALCULATED SLOPE OF ALL SANITARY SEWER AND STORM SEWER LINES.
   5. HORIZONTAL AND VERTICAL CONTROL OF ALL WATER MAIN FITTINGS AND APPURTENANCES, AND HORIZONTAL AND VERTICAL CONTROL ON THE TOP OF WATER MAINS AT ALL CROSSINGS, AND A MINIMUM OF EVERY 200 LINEAR FEET OF PIPE.
   6. HORIZONTAL AND VERTICAL CONTROL OF ALL TOP OF BANKS, TOE OF SLOPES, ALL GRADE BREAKS, BUILDINGS, PONDS, ETC.
K. ALL DIMENSIONS SHOWN ON PLAN ARE TO FACE OF BUILDING, EDGE OF PAVEMENT, CENTERLINE OF STRUCTURE, OR END OF PIPE UNLESS NOTED OTHERWISE.

IV. CLEARING/DEMOLITION

A. THE CONTRACTOR SHALL CLEAR AND GRUB ONLY THOSE PORTIONS OF THE SITE NECESSARY FOR CONSTRUCTION. DISTURBED AREAS WILL BE SEEDED, MULCHED, SODDED OR PLANTED WITH OTHER APPROVED LANDSCAPE MATERIAL IMMEDIATELY FOLLOWING CONSTRUCTION.
B. THE TOP 6" OF GROUND REMOVED DURING CLEARING AND GRUBBING SHALL BE STOCKPILED AT A SITE DESIGNATED BY THE OWNER OR THE OWNER'S ENGINEER TO BE USED FOR LANDSCAPING PURPOSES, UNLESS OTHERWISE DIRECTED BY THE OWNER OR THE OWNER'S ENGINEER. REMAINING EARTHWORK THAT RESULTS FROM CLEARING AND GRUBBING OR SITE EXCAVATION IS TO BE UTILIZED ON-SITE IF REQUIRED, PROVIDED THAT THE MATERIAL IS DEEMED SUITABLE FOR CONSTRUCTION BY THE OWNER'S SOILS TESTING COMPANY. EXCESS MATERIAL IS TO BE EITHER STOCKPILED ON THE SITE AS DIRECTED BY THE OWNER OR OWNER'S ENGINEER, OR REMOVED FROM THE SITE. THE CONTRACTOR IS RESPONSIBLE FOR ACQUIRING ANY PERMITS THAT ARE NECESSARY FOR REMOVING EXCESS EARTHWORK FROM THE SITE.
C. ALL CONSTRUCTION DEBRIS AND OTHER WASTE MATERIALS SHALL BE DISPOSED OF OFF-SITE IN ACCORDANCE WITH APPLICABLE REGULATORY AGENCY REQUIREMENTS OR AS DIRECTED BY THE OWNER OR THE OWNER'S ENGINEER.

V. PAVING AND GRADING

A. ALL DELETERIOUS SUBSURFACE MATERIAL (I.E. MUCK, PEAT, BURIED DEBRIS) IS TO BE EXCAVATED IN ACCORDANCE WITH THESE PLANS OR AS DIRECTED BY THE OWNER, THE OWNER'S ENGINEER, OR OWNER'S SOIL TESTING COMPANY. DELETERIOUS MATERIAL IS TO BE STOCKPILED OR REMOVED FROM THE SITE AS DIRECTED BY THE OWNER OR THE OWNER'S ENGINEER. EXCAVATED AREAS TO BE BACKFILLED WITH APPROVED MATERIALS AND COMPACTED AS SHOWN ON THESE PLANS. CONTRACTOR IS RESPONSIBLE FOR ACQUIRING ANY PERMITS THAT ARE NECESSARY FOR REMOVING DELETERIOUS MATERIAL FROM THE SITE.
B. THE CONTRACTOR SHALL BE RESPONSIBLE FOR PROTECTING EXCAVATIONS AGAINST COLLAPSE AND WILL PROVIDE BRACING, SHEETING OR SHORING AS NECESSARY. DEWATERING METHODS SHALL BE USED AS REQUIRED TO KEEP TRENCHES DRY WHILE PIPE AND APPURTENANCES ARE BEING PLACED.
C. ALL NECESSARY FILL AND EMBANKMENT THAT IS PLACED DURING CONSTRUCTION SHALL CONSIST OF MATERIAL SPECIFIED BY THE OWNER'S SOIL TESTING COMPANY OR ENGINEER AND BE PLACED AND COMPACTED ACCORDING TO THESE PLANS OR THE REFERENCED SOILS REPORT.
D. PROPOSED SPOT ELEVATIONS REPRESENT FINISHED PAVEMENT OR GROUND SURFACE GRADE UNLESS OTHERWISE NOTED ON DRAWINGS.
E. CONTRACTOR SHALL PROVIDE EROSION CONTROL AND SEDIMENTATION BARRIER (SILT FENCE OR OTHER MEASURES) TO PREVENT SILTATION OF ADJACENT PROPERTY, STREETS, STORM SEWERS AND WATERWAYS.
F. IF WIND EROSION BECOMES SIGNIFICANT DURING CONSTRUCTION, THE CONTRACTOR SHALL STABILIZE THE AFFECTED AREA USING SPRINKLING, IRRIGATION OR OTHER ACCEPTABLE METHODS.
G. THE CONTRACTOR WILL STABILIZE BY SEED AND MULCH, SOD OR OTHER APPROVED MATERIALS AS REQUIRED BY ANY DISTURBED AREAS WITHIN ONE WEEK FOLLOWING CONSTRUCTION OF THE UTILITY SYSTEMS AND PAVEMENT AREAS. CONTRACTOR SHALL MAINTAIN SUCH AREAS UNTIL FINAL ACCEPTANCE BY OWNER.
H. ENGINEERED FILL MATERIAL SHALL NOT CONTAIN ROCKS OR HARD LUMPS GREATER THAN 3 INCHES IN MAXIMUM DIMENSIONS AND SHALL BE FREE OF VEGETATION, ORGANIC MATTER, DEBRIS, RUBBLE, AND OTHER UNSUITABLE MATERIALS. SHALL BE NON-EXPANSIVE MATERIALS
I. IMPORTED SOILS FOR USE AS ENGINEERED FILL AND SHALL NOT CONTAIN ROCKS OR HARD LUMPS GREATER THAN 3 INCHES IN MAXIMUM DIMENSIONS AND SHALL BE FREE OF VEGETATION, ORGANIC MATTER, DEBRIS, RUBBLE, AND OTHER UNSUITABLE MATERIALS.
J. AGGREGATE BASE MATERIAL SHALL MEET THE FOLLOWING GRADATION REQUIREMENTS.

SEIVE SIZE (PER ASTM D422)	% PASSING BY WEIGHT
1 INCH	100
3/4"	90 – 100
NO. 8	35 – 55
NO. 200	0 – 8

K. ALL AREAS TO RECEIVE FILL, AND AREAS OF STRUCTURES AND PAVEMENTS, SHALL BE STRIPPED OF VEGETATION, ORGANIC MATTER, DEBRIS, RUBBLE, AND OTHER UNSUITABLE MATERIALS. STRIPPED SOILS SHALL NOT BE USED IN ENGINEERED FILL, BUT MAY BE USED IN LANDSCAPE AREAS. ENGINEERED FILL MATERIAL SHALL BE COMPACTED TO AT LEAST THE FOLLOWING

* PERCENTAGES OF MAXIMUM DRY DENSITY AND OPTIMUM MOISTURE CONTENT, PER ASTM D-698 (STANDARD PROCTOR):

ENGINEERED FILL MATERIAL	MINIMUM % COMPACTION	MOISTURE CONTENT RANGE
NATIVE SOIL	92%	OPTIMUM TO OPTIMUM PLUS 3%
ENGINEERED FILL UNDER STRUCTURES AND BEHIND RETAINING WALLS	98%	OPTIMUM TO OPTIMUM PLUS 3%
ENGINEERED FILL UNDER PAVEMENT AREAS	100%	OPTIMUM PLUS OR MINUS 2%
FILL IN LANDSCAPE AREAS	92%	2 TO 5% ABOVE OPTIMUM

AGGREGATE BASE MATERIAL OR IMPORTED GRANULAR SOIL IN BUILDING AND PAVED AREAS SHALL BE COMPACTED TO AT LEAST THE FOLLOWING PERCENTAGES OF MAXIMUM DRY DENSITY AND OPTIMUM MOISTURE CONTENT, PER ASTM D-698 MODIFIED OR AASHTO EQUIVALENT.

MATERIAL	COMPACTION	RANGE
AGGREGATE BASE MATERIAL OR IMPORTED GRANULAR SOIL IN BUILDING AND PAVEMENT AREAS	100%	OPTIMUM PLUS OR MINUS 2%

L. IF SUB GRADE SOILS EXHIBIT PUMPING DURING COMPACTION, THE AREA SHALL BE ALLOWED TO DRY UNTIL THE SOILS BECOME WORKABLE WITHOUT PUMPING. THE MOISTURE CONTENT OF THE SOILS SHALL BE ADJUSTED TO PREVENT PUMPING.
M. EXPOSURE TO THE ENVIRONMENT MAY REDUCE THE STRENGTH OF SOILS IN FOOTING, FLOOR SLAB, AND PAVED AREAS. IF THIS OCCURS, THE SOFTENED SOILS SHALL BE REMOVED AND REWORKED IMMEDIATELY PRIOR TO CONCRETE PLACEMENT. IF RAINFALL IS EXPECTED AT A TIME WHEN BEARING SOILS IN FOOTING AREAS ARE EXPOSED, A 2 TO 4 INCH THICK LAYER OF LEAN CONCRETE MAY BE PLACED IN SUCH AREAS. THE SITE SHALL BE GRADED TO TRANSPORT SURFACE RUNOFF AWAY FROM THE STRUCTURES AND PAVED AREAS. WATER SHALL NOT BE ALLOWED TO ACCUMULATE (POND) AROUND BUILDING PERIMETERS OR ON PAVED AREAS.
N. GENERAL ROCK EXCAVATION: ROCK SHALL BE DEFINED AS ANY MATERIAL WHICH CANNOT BE EXCAVATED WITH A SINGLE – TOOTH RIPPER DRAWN BY A CRAWLER TRACTOR HAVING A MINIMUM DRAW BAR PULL RATED AT NOT LESS THAN 56,000 POUNDS (CATERPILLAR D8K OR EQUIVALENT). THE VOLUME OF ROCK EXCAVATION SHALL BE DETERMINED BY A LICENSED SURVEYOR BY THE AVERAGE END AREA METHOD. THE CONTRACTOR SHALL SUBMIT TO THE ENGINEER A SCALED PLAN WITH SUFFICIENT ELEVATION POINTS TO ACCURATELY DEFINE THE VOLUME OF ROCK EXCAVATED. THE DEPTH OF ROCK SHALL BE DEFINED AS FROM TOP OF ROCK TO THE CONTRACT SPECIFIED ELEVATION FOR EXCAVATION. CONTRACTOR SHALL BE COMPENSATED FOR ROCK EXCAVATION AS DEFINED HEREIN IN ACCORDANCE WITH CONTRACT UNIT PRICES.

VI. DRAINAGE:

A. ALL STORM SEWER PIPE SHALL BE REINFORCED CONCRETE PIPE UNLESS OTHERWISE NOTED ON PLANS. ALL DRAINAGE STRUCTURES SHALL BE IN ACCORDANCE WITH NCDOT STANDARDS UNLESS OTHERWISE NOTED.
B. PIPE LENGTHS SHOWN ARE APPROXIMATE AND TO CENTER OF DRAINAGE STRUCTURE OR TO THE END OF THE PIPE. CONTRACTOR SHALL VERIFY ALL QUANTITIES PRIOR TO SUBMITTAL OF BID.
C. ALL DRAINAGE STRUCTURE GRATES AND COVERS SHALL BE AS PER NCDOT STANDARDS UNLESS OTHERWISE NOTED.
D. ALL STORM DRAINAGE PIPING SHALL BE SUBJECT TO A VISUAL INSPECTION BY THE OWNER'S ENGINEER PRIOR TO THE PLACEMENT OF BACKFILL. CONTRACTOR TO NOTIFY THE ENGINEER 48 HOURS IN ADVANCE TO SCHEDULE INSPECTIONS.
E. THE CONTRACTOR SHALL MAINTAIN AND PROTECT FROM MUD, DIRT, DEBRIS, ETC. THE STORM DRAINAGE SYSTEM UNTIL FINAL ACCEPTANCE OF THE PROJECT. THE CONTRACTOR MAY BE REQUIRED TO RECLEAN PIPES AND INLETS FOR THESE PURPOSES.

VII. EROSION/TURBIDITY CONTROL

A. THE INSTALLATION OF TEMPORARY EROSION CONTROL BARRIERS SHALL BE COORDINATED WITH THE CONSTRUCTION OF THE PERMANENT EROSION CONTROL FEATURES TO THE EXTENT NECESSARY TO ASSURE ECONOMICAL, EFFECTIVE AND CONTINUOUS CONTROL OF EROSION AND WATER POLLUTION THROUGHOUT THE LIFE OF THE CONSTRUCTION PHASE.
B. THE TYPE OF EROSION CONTROL BARRIERS USED SHALL BE GOVERNED BY THE NATURE OF THE CONSTRUCTION OPERATION AND SOIL TYPE THAT WILL BE EXPOSED. SILTY AND CLAYEY MATERIAL USUALLY REQUIRE SOLID SEDIMENT BARRIERS TO PREVENT TURBID WATER DISCHARGE, WHILE SANDY MATERIAL MAY NEED ONLY SILT SILT FENCE TO PREVENT EROSION. FLOATING TURBIDITY CURTAINS SHALL BE USED IN OPEN WATER SITUATIONS. DIVERSION DITCHES OR SWALES MAY BE REQUIRED TO PREVENT TURBID STORM WATER RUNOFF FROM BEING DISCHARGED TO WETLANDS OR OTHER WATER BODIES. IT MAY BE NECESSARY TO EMPLOY A COMBINATION OF BARRIERS, DITCHES AND OTHER EROSION/TURBIDITY CONTROL MEASURES IF CONDITIONS WARRANT.
C. CONSTRUCTION OPERATIONS IN OR ADJACENT TO WETLANDS SHALL BE RESTRICTED TO THOSE AREAS IDENTIFIED IN THE PLANS AND IN THE SPECIFICATIONS.
D. EXCEPT AS NECESSARY FOR CONSTRUCTION, EXCAVATED MATERIAL SHALL NOT BE DEPOSITED IN WETLANDS OR IN A POSITION CLOSE ENOUGH THERETO TO BE WASHED AWAY BY HIGH WATER OR RUNOFF. AUTHORIZATION FROM THE APPROPRIATE PERMITTING AUTHORITY IS REQUIRED TO BE SUBMITTED TO THE TOWN OF WAXHAW PRIOR TO WORKING IN THE WETLANDS.
E. THE CONTRACTOR SHALL SCHEDULE HIS OPERATIONS SUCH THAT THE AREA OF UNPROTECTED ERODIBLE EARTH EXPOSED AT ANY ONE TIME IS NOT LARGER THAN THE MINIMUM AREA NECESSARY FOR EFFICIENT CONSTRUCTION OPERATIONS, AND THE DURATION OF EXPOSED, UNCOMPLETED CONSTRUCTION TO THE ELEMENTS SHALL BE AS SHORT AS PRACTICABLE. CLEARING AND GRUBBING SHALL BE SO SCHEDULED AND PERFORMED THAT GRADING OPERATIONS CAN FOLLOW IMMEDIATELY THEREAFTER, AND GRADING OPERATIONS SHALL BE SCHEDULED AND PERFORMED THAT PERMANENT EROSION CONTROL FEATURES CAN FOLLOW IMMEDIATELY THEREAFTER IF CONDITIONS ON THE PROJECT PERMIT.
F. THE CONTRACTOR SHALL PROVIDE ROUTINE MAINTENANCE OF PERMANENT AND TEMPORARY EROSION CONTROL FEATURES UNTIL THE PROJECT IS COMPLETE AND ALL DISTURBED SOILS ARE STABILIZED. MAINTENANCE MUST INCLUDE ALL RECOMMENDED BY SELF INSPECTION AND TOWN OF WAXHAW INSPECTION.

NPDES NOTE:

REGULATIONS ADOPTED BY THE US ENVIRONMENTAL PROTECTION AGENCY (US EPA) AND BY THE NORTH CAROLINA DIVISION OF WATER QUALITY REQUIRE THAT A NATURAL POLLUTANT DISCHARGE ELIMINATION SYSTEM (NPDES) PERMIT BE OBTAINED FOR STORMWATER DISCHARGES FROM CONSTRUCTION ACTIVITIES WITH LAND DISTURBANCE OF 1 ACRE OR MORE.

CONTRACTOR SHALL CHECK EROSION CONTROL MEASURES WEEKLY AND/OR AFTER A 1/2" OR MORE RAIN. CONTRACTOR SHALL KEEP RECORDS OF EVERY INSPECTION.

EROSION CONTROL NOTES:

1. CONTRACTOR SHALL STABILIZE EXPOSED GROUND AS SOON AS INDIVIDUAL AREAS ARE COMPLETED.
2. CONTRACTOR SHALL NOT REMOVE ANY BASIN UNTIL ALL SEDIMENT-PRODUCING AREAS UPSTREAM HAVE BEEN PERMANENTLY STABILIZED AND REMOVAL IS APPROVED BY TOWN OF WAXHAW EROSION CONTROL INSPECTOR.
3. STABILIZATION IS THE BEST FORM OF EROSION CONTROL. TEMPORARY SEEDING IS NECESSARY TO ACHIEVE EROSION CONTROL ON LARGE DENUDED AREAS AND ESPECIALLY WHEN SPECIFICALLY REQUIRED AS PART OF THE CONSTRUCTION SEQUENCE SHOWN ON THE PLAN. ALL GRADED SLOPES MUST BE SEEDED AND MULCHED WITHIN **14** CALENDAR DAYS (**7** CALENDAR DAYS FOR SLOPES STEEPER THAN **3:1**).
4. ADDITIONAL MEASURES TO CONTROL EROSION AND SEDIMENT MAY BE REQUIRED BY LOCAL AUTHORITY.
5. NO SLOPES SHALL EXCEED 2:1. FILL SLOPES GREATER THAN 10' REQUIRE ADEQUATE TERRACING.
6. GROUNDCOVER ON EXPOSED SLOPES SHOULD BE COMPLETED WITHIN **14** CALENDAR DAYS.
7. ALL SILT FENCE SHALL HAVE WIRE AND WASHED STONE.
8. A FILTER BERM SHALL BE PLACED TEMPORARILY AT THE END OF ALL FES UNTIL RIP RAP APRONS ARE INSTALLED.
9. ON-SITE BURIAL PITS REQUIRE AN ON-SITE DEMOLITION LANDFILL PERMIT FROM THE ZONING ADMINISTRATOR.
10. ANY GRADING BEYOND THE DENUDED LIMITS SHOWN ON THE PLAN IS A VIOLATION OF THE TOWN OF WAXHAW'S EROSION CONTROL ORDINANCE AND IS SUBJECT TO A FINE.
11. GRADING MORE THAN ONE ACRE WITHOUT AN APPROVED EROSION CONTROL PLAN IS A VIOLATION OF THE TOWN OF WAXHAW AND NORTH CAROLINA LAW, AND IS SUBJECT TO A FINE.
12. A GRADING PLAN MUST BE SUBMITTED FOR ANY LOT GRADING THAT WAS NOT PREVIOUSLY APPROVED.
13. APPROVAL OF THIS PLAN IS NOT AN AUTHORIZATION TO GRADE ADJACENT PROPERTIES. WHEN FIELD CONDITIONS WARRANT OFF-SITE GRADING, PERMISSION MUST BE OBTAINED FROM AFFECTED PROPERTY OWNERS AND APPROVED BY THE TOWN OF WAXHAW.
14. ALL STD. NUMBERS REFER TO THE **NCDEQ** STANDARDS MANUAL UNLESS OTHERWISE NOTED.
15. STEEL POST WITH WIRE FENCE BACKING SHOULD BE USED, BURIED OR DRIVEN TO A DEPTH OF 18" IN THE GROUND. PREFABRICATED SILT FENCE IS NOT ACCEPTABLE ON THIS PROJECT.
16. SEDIMENT TRAP AND BASINS SLOPES SHALL BE SEEDED IMMEDIATE AFTER CONSTRUCTION TO PROMOTE STABLE SLOPES AS SOON AS POSSIBLE.
17. WHERE TEMPORARY DIVERSIONS ENTER SEDIMENT TRAPS AND BASINS, TEMPORARY SLOPE DRAINS MAY BE NECESSARY BASED ON FIELD CONDITIONS.

MAINTENANCE PLAN:

1. ALL EROSION AND SEDIMENT CONTROL PRACTICES WILL BE CHECKED FOR STABILITY AND OPERATION FOLLOWING EVERY RUNOFF-PRODUCING RAINFALL BUT IN NO CASE LESS THAN ONCE EVERY WEEK. ANY NEEDED REPAIRS WILL BE MADE IMMEDIATELY TO MAINTAIN ALL PRACTICES AS DESIGNATED.
2. THE SEDIMENT BASIN WILL BE CLEANED OUT WHEN THE LEVEL OF SEDIMENT REACHES 2.0 FT. BELOW THE TOP OF THE RISER. GRAVEL WILL BE CLEANED OR REPLACED TO ALLOW SEDIMENT POOL TO DRAIN PROPERLY AT ALL TIMES.
3. SEDIMENT WILL BE REMOVED FROM THE SEDIMENT TRAP AND BLOCK AND GRAVEL INLET PROTECTION DEVICE TO ALLOW SEDIMENT POOL TO DRAIN PROPERLY AT ALL TIMES.
4. SEDIMENT WILL BE REMOVED FROM BEHIND THE SEDIMENT FENCE WHEN IT BECOMES ABOUT 0.5 FT DEEP AT THE FENCE. THE SEDIMENT FENCE WILL BE REPAIRED AS NECESSARY TO MAINTAIN A BARRIER.
5. ALL SEEDED AREAS WILL BE FERTILIZED, RE-SEEDED AS NECESSARY, AND MULCHED ACCORDING TO SPECIFICATIONS IN THE VEGETATIVE PLAN TO MAINTAIN A VIGOROUS, DENSE VEGETATIVE COVER.

G.S. 113A-57(2), THE ANGLE FOR GRADED SLOPES AND FILLS SHALL BE NO GREATER THAN THE ANGLE THAT CAN BE RETAINED BY VEGETATIVE COVER OR OTHER ADEQUATE EROSION-CONTROL DEVISES OR STRUCTURES. IN ANY EVENT, SLOPES LEFT EXPOSED SHALL, WITHIN **14** CALENDAR DAYS OF COMPLETION OF ANY PHASE OF GRADING, BE PLANTED OR OTHERWISE BE PROVIDED WITH TEMPORARY OR PERMANENT GROUND COVER, DEVICES, OR STRUCTURES SUFFICIENT TO RESTRAIN EROSION.

G.S. 113A-57(3), PROVISIONS FOR A PERMANENT GROUND COVER SUFFICIENT TO RESTRAIN EROSION MUST BE ACCOMPLISHED WITHIN 15 WORKING DAYS OR 90 CALENDAR DAYS FOLLOWING COMPLETION OF CONSTRUCTION OR DEVELOPMENT, WHICHEVER PERIOD IS SHORTER.

TEMPORARY SEEDING REQUIREMENTS PER NCDEQ EROSION AND SEDIMENT CONTROL PLANNING AND DESIGN MANUAL

TABLE 6.10A
TEMPORARY SEEDING RECOMMENDATIONS FOR LATE WINTER AND EARLY SPRING

SEEDING MIXTURE

SPECIES	RATE (LB/ACRE)
RYE (GRAIN)	120
ANNUAL LESPEDEZA (KOBE IN PIEDMONT AND COASTAL PLAIN, KOREAN IN MOUNTAINS)	50

OMIT ANNUAL LESPEDEZA WHEN DURATION OF TEMPORARY COVER IS NOT TO EXTEND BEYOND JUNE.

SEEDING DATES
MOUNTAINS — ABOVE 2500 FEET: FEB. 15 – MAY 15; BELOW 2500 FEET: FEB. 1– MAY 1
PIEDMONT — JAN. 1 – MAY 1
COASTAL PLAIN — DEC. 1 – APR. 15

SOIL AMENDMENTS
FOLLOW RECOMMENDATIONS OF SOIL TESTS OR APPLY 2,000 LB/ACRE GROUND AGRICULTURAL LIMESTONE AND 750 LB/ACRE 10-10-10 FERTILIZER.

MULCH
APPLY 4,000 LB/ACRE STRAW. ANCHOR STRAW BY TACKING WITH ASPHALT, NETTING, OR A MULCH ANCHORING TOOL. A DISK WITH BLADES SET NEARLY STRAIGHT CAN BE USED AS A MULCH ANCHORING TOOL.

MAINTENANCE
REFERTILIZE IF GROWTH IS NOT FULLY ADEQUATE. RESEED, REFERTILIZE AND MULCH IMMEDIATELY FOLLOWING EROSION OR OTHER DAMAGE.

TABLE 6.10B
TEMPORARY SEEDING RECOMMENDATIONS FOR SUMMER

SEEDING MIXTURE

SPECIES	RATE (LB/ACRE)
GERMAN MILLET	40

IN THE PIEDMONT AND MOUNTAINS, A SMALL-STEMMED SUDANGRASS MAY BE SUBSTITUTED AT A RATE OF 50 LB/ACRE.

SEEDING DATES
MOUNTAINS — MAY 15 – AUG. 15
PIEDMONT — MAY 1 – AUG. 15
COASTAL PLAIN — APR. 15 – AUG. 15

SOIL AMENDMENTS
FOLLOW RECOMMENDATIONS OF SOIL TESTS OR APPLY 2,000 LB/ACRE GROUND AGRICULTURAL LIMESTONE AND 750 LB/ACRE 10-10-10 FERTILIZER.

MULCH
APPLY 4,000 LB/ACRE STRAW. ANCHOR STRAW BY TACKING WITH ASPHALT, NETTING, OR A MULCH ANCHORING TOOL. A DISK WITH BLADES SET NEARLY STRAIGHT CAN BE USED AS A MULCH ANCHORING TOOL.

MAINTENANCE
REFERTILIZE IF GROWTH IS NOT FULLY ADEQUATE. RESEED, REFERTILIZE AND MULCH IMMEDIATELY FOLLOWING EROSION OR OTHER DAMAGE.

TABLE 6.10C
TEMPORARY SEEDING RECOMMENDATIONS FOR FALL

SEEDING MIXTURE

SPECIES	RATE (LB/ACRE)
RYE (GRAIN)	120

SEEDING DATES
MOUNTAINS — AUG. 15 – DEC. 15
COASTAL PLAIN AND PIEDMONT — AUG. 15 – DEC. 30

SOIL AMENDMENTS
FOLLOW SOIL TESTS OR APPLY 2,000 LB/ACRE GROUND AGRICULTURAL LIMESTONE AND 1,000 LB/ACRE 10-10-10 FERTILIZER.

MULCH
APPLY 4,000 LB/ACRE STRAW. ANCHOR STRAW BY TACKING WITH ASPHALT, NETTING, OR A MULCH ANCHORING TOOL. A DISK WITH BLADES SET NEARLY STRAIGHT CAN BE USED AS A MULCH ANCHORING TOOL.

MAINTENANCE
REPAIR AND REFERTILIZE DAMAGED AREAS IMMEDIATELY. TOPDRESS WITH 50 LB/ACRE OF NITROGEN IN MARCH. IF IT IS NECESSARY TO EXTENT TEMPORARY COVER BEYOND JUNE 15, OVERSEED WITH 50 LB/ACRE KOBE (PIEDMONT AND COASTAL PLAIN) OR KOREAN (MOUNTAINS) LESPEDEZA IN LATE FEBRUARY OR EARLY MARCH.

PERMANENT SEEDING REQUIREMENTS PER NCDEQ EROSION AND SEDIMENT CONTROL PLANNING AND DESIGN MANUAL

TABLE 6.11K
PERMANENT SEEDING FOR STEEP SLOPES OR POOR SOILS; LOW MAINTENANCE

SEEDING MIXTURE

SPECIES	RATE (LB/ACRE)
TALL FESCUE	100
SERICEA LESPEDEZA	30
KOBE LESPEDEZA	10

SEEDING NOTES
1. IN EASTERN PIEDMONT ADD 25 LB/ACRE PENSACOLA BAHIAGRASS OR 10 LB/ACRE COMMON BERMUDAGRASS. USE COMMON BERMUDAGRASS ONLY WHERE IT IS UN-LIKELY TO BECOME A PEST
2. AFTER AUG. 15 USE UNSCARIFIED SERICEA SEED
3. WHERE A NEAT APPEARANCE IS DESIRED, OMIT SERICEA AND SUBSTITUTE 40 LB/ACRE BAHIAGRASS OR 15 LB/ACRE BERMUDAGRASS.
4. TO EXTEND SPRING SEEDING DATES INTO JUNE, ADD 15 LB/ACRE HULLED BER-MUDAGRASS. HOWEVER, IT IS PREFERABLE TO SEED TEMPORARY COVER AND SEED FESCUE IN SEPT.

NURSE PLANTS
BETWEEN MAY 1 AND AUG. 15, ADD 10 LB/ACRE GERMAN MILLET OR 15 LB/ACRE SUDANGRASS. PRIOR TO MAY 1 OR AFTER AUG. 15 AND 40 LB/ACRE RYE (GRAIN)

SEEDING DATES

	BEST	POSSIBLE
FALL:	AUG. 25 – SEPT. 15	AUG. 20 – OCT. 25
LATE WINTER:	FEB. 15 – MAR. 21	FEB. 1 – APR. 15

FALL IS BEST FOR TALL FESCUE AND LATE WINTER LESPEDEZAS. OVERSEEDING OF KOBE LESPEDEZA OVER FALL-SEEDED TALL FESCUE IS VERY EFFECTIVE. USE UNHULLED BERMUDAGRASS SEED IN FALL.

SOIL AMENDMENTS
APPLY LIME AND FERTILIZER ACCORDING TO SOIL TESTS, OR APPLY 4,000 LB/ACRE GROUND AGRICULTURAL LIMESTONE AND 1,000 LB/ACRE 10-10-10 FERTILIZER.

MULCH
APPLY 4,000-5000 LB/ACRE GRAIN STRAW, OR EQUIVALENT COVER OF ANOTHER SUITABLE MULCHING MATERIAL. ANCHOR MULCH BY TACKING WITH ASPHALT, ROVING, OR NETTING. NETTING IS THE PREFERRED ANCHORING METHOD ON STEEP SLOPES.

MAINTENANCE
REFERTILIZE IN THE SECOND YEAR UNLESS GROWTH IS FULLY ADEQUATE. MAY BE MOWED ONCE OR TWICE A YEAR, BUT MOWING IS NOT NECESSARY. RESEED, FERTILIZE AND MULCH DAMAGED AREAS IMMEDIATELY.

NOTES

DE-WATERING: THE CONTRACTOR SHALL AT ALL TIMES PROVIDE AND MAINTAIN AMPLE MEANS AND EQUIPMENT WITH WHICH TO REMOVE AND PROPERLY DISPOSE OF ANY AND ALL WATER ENTERING THE EXCAVATION OR OTHER PARTS OF THE WORK AND KEEP ALL EXCAVATIONS DRY UNTIL SUCH TIME AS PIPE LAYING AND GRADING IS COMPLETED AND STRUCTURES TO BE BUILT THEREIN ARE COMPLETED.

NO WATER SHALL BE ALLOWED TO RISE AROUND THE PIPE IN UNBACKFILLED TRENCHES NOR SHALL IT BE ALLOWED TO RISE OVER MASONRY UNTIL THE CONCRETE OR MORTAR HAS SET (MINIMUM 24 HOURS). ALL WATER PUMPED OR DRAINED FROM THE WORK SHALL BE DISPOSED OF IN SUCH A MANNER AS TO PREVENT SILTATION AND EROSION TO ADJACENT PROPERTY OR OTHER CONSTRUCTION.

VIII. PROTECTION OF EXISTING UTILITIES

THE CONTRACTOR SHALL CONTACT THE APPROPRIATE AGENCY FOR THE EXACT FIELD LOCATIONS OF ALL WATER, SEWER, ELECTRIC, TELEPHONE, TELEVISION AND ANY OTHER UNDERGROUND AND OVERHEAD UTILITY BEFORE STARTING CONSTRUCTION. THE OMISSION FROM OR THE INCLUSION OF UTILITY LOCATION ON THE CONTRACT DRAWINGS IS NOT TO BE CONSIDERED AS THE NON-EXISTANCE OF OR A DEFINITE LOCATION OF EXISTING UTILITIES. IT SHALL BE THE RESPONSIBILITY OF THE CONTRACTOR TO VERIFY THE LOCATION AND DEPTH OF ALL UNDERGROUND UTILITIES ALONG THE ROUTE OF WORK.

THE FOLLOWING LISTING OF UTILITY COMPANIES (WHICH MAY OR MAY NOT BE COMPLETE) MAY HAVE EXISTING UNDERGROUND OR OVERHEAD UTILITIES IN THE CONTRACT VICINITY.

UTILITY PROVIDERS		
WATER & SEWER	UNION COUNTY PUBLIC WORKS	704-296-4210
ELECTRIC	DUKE POWER CORP.	704-821-2105
NATURAL GAS	PIEDMONT NATURAL GAS	704-507-1912

IX. SANITARY SEWER AND WATER DISTRIBUTION

A. SANITARY SEWERS AND STORM SEWERS SHOULD ALWAYS CROSS UNDER WATER MAINS. SANITARY SEWERS AND STORM SEWERS CROSSING WATER MAINS SHALL BE LAID TO PROVIDE A MINIMUM VERTICAL DISTANCE OF 18 INCHES BETWEEN THE INVERT OF THE UPPER PIPE AND THE CROWN OF THE LOWER PIPE.

B. WHERE SANITARY SEWERS AND STORM SEWERS MUST CROSS A WATER MAIN WITH LESS THAN 18 INCHES VERTICAL DISTANCE, BOTH THE SEWER AND THE WATER MAIN SHALL BE CONSTRUCTED OF DUCTILE IRON PIPE (DIP) AT THE CROSSING. (DIP IS NOT REQUIRED FOR STORM SEWERS IF IT IS NOT AVAILABLE IN THE SIZE PROPOSED). SUFFICIENT LENGTHS OF DIP MUST BE USED TO PROVIDE A MINIMUM SEPARATION OF 10 FEET BETWEEN ANY TWO JOINTS. ALL JOINTS ON THE WATER MAIN WITHIN 20 FEET OF THE CROSSING MUST BE LEAK FREE AND MECHANICALLY RESTRAINED. A MINIMUM VERTICAL CLEARANCE OF 6 INCHES MUST BE MAINTAINED AT THE CROSSING.

C. ALL CROSSINGS SHALL BE ARRANGED SO THAT THE SEWER PIPE JOINTS AND THE WATER MAIN PIPE JOINTS ARE EQUIDISTANT FROM THE POINT OF CROSSING (PIPES CENTERED ON THE CROSSING).

D. WHERE A NEW PIPE CONFLICTS WITH AN EXISTING PIPE, THE NEW PIPE SHALL BE CONSTRUCTED OF DIP AND THE CROSSING SHALL BE ARRANGED TO MEET THE REQUIREMENTS ABOVE.

E. A MINIMUM 10-FOOT HORIZONTAL SEPARATION SHALL BE MAINTAINED BETWEEN ANY TYPE OF SEWER AND WATER MAIN IN PARALLEL INSTALLATIONS.

F. IN CASES WHERE IT IS NOT POSSIBLE TO MAINTAIN A 10-FOOT HORIZONTAL SEPARATION, THE WATER MAIN MUST BE LAID IN A SEPARATE TRENCH OR ON AN UNDISTURBED EARTH SHELF LOCATED ON ONE SIDE OF THE SEWER OR FORCE MAIN AT SUCH AN ELEVATION THAT THE BOTTOM OF THE WATER MAIN IS AT LEAST 18 INCHES ABOVE THE TOP OF THE SEWER.

G. WHERE IT IS NOT POSSIBLE TO MAINTAIN A VERTICAL DISTANCE OF 18 INCHES IN PARALLEL INSTALLATIONS, THE WATER MAIN SHALL BE CONSTRUCTED OF DIP AND THE SEWER OR THE FORCE MAIN SHALL BE CONSTRUCTED OF DIP (IF AVAILABLE IN THE SIZE PROPOSED) WITH A MINIMUM VERTICAL SEPARATION OF 6 INCHES. THE WATER MAIN SHOULD ALWAYS BE ABOVE THE SEWER. JOINTS ON THE WATER MAIN SHALL BE LOCATED AS FAR APART AS POSSIBLE FROM THE JOINTS ON THE SEWER OR FORCE MAIN(STAGGERED JOINTS).

H. ALL SANITARY SEWER MAINS, LATERALS AND FORCE MAINS SHALL HAVE A MINIMUM OF 36 INCHES OF COVER.

I. ALL ON SITE P.V.C. GRAVITY SANITARY SEWER PIPE SHALL BE MADE OF MATERIAL HAVING A CELL CLASSIFICATION OF 12454 B, 12454 C OR 13354 B AS DEFINED IN ASTM D-1784 AND CONFORM TO THE REQUIREMENTS OF SDR 26. ELASTOMERIC GASKET JOINTS SHALL BE UTILIZED.

J. ALL ON SITE DUCTILE IRON PIPE SHALL BE CLASS 52 AND SHALL RECEIVE INTERIOR AND EXTERIOR BITUMINOUS COATING IN ACCORDANCE WITH ANSI A 21.6, A 21.8, OR A 21.51.

K. SANITARY SERVICE CONNECTION LOCATIONS SHOWN ON THESE PLANS ARE APPROXIMATE.

L. ALL SANITARY SEWER WORK SHALL CONFORM TO **UNION COUNTY** STANDARDS AND SPECIFICATIONS, **UNION COUNTY WATER & SEWER EXTENSION POLICY** & TO **UNION COUNTY** WATER & SEWER EXTENSION ORDINANCE.

M. PRIOR TO COMMENCING WORK WHICH REQUIRES CONNECTING NEW SANITARY SEWER LINES TO EXISTING LINES OR APPURTENANCES, THE CONTRACTOR SHALL VERIFY LOCATION AND ELEVATION OF ALL EXISTING UTILITIES NEAR THE POINT OF CONNECTION AND NOTIFY OWNER'S ENGINEER OF ANY CONFLICTS OR DISCREPANCIES WITH DESIGN INFORMATION SHOWN IN THESE PLANS. CONTRACTOR SHALL NOTIFY ENGINEER AND **UNION COUNTY PUBLIC WORKS** INSPECTOR AT LEAST 48 HOURS IN ADVANCE OF SCHEDULED WORK.

N. ALL GRAVITY SEWER PIPING SHALL BE SUBJECT TO A VISUAL INSPECTION BY THE OWNER'S ENGINEER AND **UNION COUNTY PUBLIC WORKS** PRIOR TO PLACEMENT OF AND PAVING AND AGAIN PRIOR TO OBTAINING CERTIFICATE OF OCCUPANCY. CONTRACTOR TO NOTIFY THE ENGINEER AND **UNION COUNTY PUBLIC WORKS** 48 HOURS IN ADVANCE TO SCHEDULE INSPECTIONS.

O. THE CONTRACTOR SHALL PERFORM ALL NECESSARY TESTING IN ACCORDANCE WITH **UNION COUNTY PUBLIC WORKS** STANDARDS. SAID TESTS ARE TO BE CERTIFIED BY THE ENGINEER OF RECORD AND SUBMITTED TO THE REGULATORY AGENCY FOR APPROVAL. COORDINATION OF TESTING AND NOTIFICATION OF ALL PARTIES IS THE CONTRACTOR'S RESPONSIBILITY.

P. ALL WATER MAINS SHALL HAVE A MINIMUM OF 36 INCHES OF COVER.

Q. ALL WATER SYSTEM WORK SHALL CONFORM TO **UNION COUNTY** STANDARDS AND SPECIFICATIONS, **UNION COUNTY WATER AND SEWER EXTENSION POLICY & TO UNION COUNTY WATER & SEWER** EXTENSION ORDINANCE.

R. ALL ON SITE PVC WATER MAINS 4 INCHES THROUGH 12 INCHES SHALL BE IN ACCORDANCE WITH AWWA C-900 AND SHALL BE CLASS 150 DR 18. ALL ON-SITE PVC WATER MAINS 2" TO 3" SHALL BE CLASS 1120 AND MEET REQUIREMENTS OF SDR 21 IN ACCORDANCE WITH ASTM D-2241. WATER MAINS SMALLER THAN 1 1/2" SHALL BE CLASS 1120 OR 1220 SCHEDULE 80 AND MEET REQUIREMENTS OF ASTM D-1785.

S. PVC PIPE FOR FIRE PROTECTION AWWA C900 CLASS 200 WITH AN SDR OF 14 OR LESS

T. ALL DUCTILE IRON PIPE SHALL CONFORM TO THE REQUIREMENTS OF ANSI STANDARD A21.51, MINIMUM CLASS 50. JOINTS FOR DUCTILE IRON PIPE SHALL BE MECHANICAL OR PUSH-ON JOINTS. PIPE SHALL HAVE AN EXTERIOR BITUMINOUS COATING IN ACCORDANCE WITH ANSI A21.51. PIPE INTERIOR SHALL HAVE A CEMENT MORTAR LINING WITH AN ASPHALTIC SEAL COAT CONFORMING TO AWWA/ANSI C104/A21.4. THE WEIGHT AND CLASS DESIGNATION SHALL BE PAINTED IN WHITE ON THE EXTERIOR SURFACE OF ALL PIPES AND FITTINGS. MANUFACTURER'S CODE OR SERIAL NUMBER SHALL BE PROVIDED ON THE BELL OF EACH PIPE JOINT.

U. ALL DUCTILE FITTINGS SHALL BE MECHANICAL JOINT WITH A MINIMUM PRESSURE RATING OF 250 PSI AND SHALL CONFORM TO THE REQUIREMENTS OF ANSI/AWWA STANDARD A21.10/C110. ALL FITTINGS SHALL BE COATED AND LINED AS SPECIFIED ABOVE FOR DUCTILE IRON PIPE.

V. CONTRACTOR SHALL INSTALL TEMPORARY BLOWOFFS AT THE END OF WATER SERVICE LATERALS TO BUILDINGS TO ASSURE ADEQUATE FLUSHING AND DISINFECTION.

W. THRUST BLOCKING SHALL BE PROVIDED AT ALL FITTINGS AND HYDRANTS IN ACCORDANCE WITH **UNION COUNTY PUBLIC WORKS**.

X. POINTS OF CONNECTION OF THE EXTERNAL WATER LINES ARE TO COINCIDE WITH THE BUILDING PLUMBING AS SHOWN ON THE BUILDING PLUMBING PLANS. CONNECTION LOCATIONS SHOWN ON THESE PLANS ARE APPROXIMATE.

Y. FIRE LINES TO BUILDINGS SHALL BE INSTALLED BY A CONTRACTOR DULY LICENSED BY THE STATE FIRE MARSHALL'S OFFICE. CONTRACTOR TO VERIFY REQUIREMENTS PRIOR TO CONSTRUCTION.

Z. ALL COMPONENTS OF THE WATER SYSTEM, INCLUDING FITTINGS, HYDRANTS, CONNECTIONS, AND VALVES SHALL REMAIN UNCOVERED UNTIL PROPERLY INSPECTED AND ACCEPTED BY THE OWNER'S ENGINEER AND THE **UNION COUNTY PUBLIC WORKS**. PRESSURE TESTS SHALL BE IN ACCORDANCE WITH **UNION COUNTY PUBLIC WORKS** SPECIFICATIONS. CONTRACTOR TO NOTIFY OWNER'S ENGINEER AND **UNION COUNTY PUBLIC WORKS** INSPECTORS 48 HOURS IN ADVANCE OF PERFORMING TESTS.

AA. DISINFECTION: SHALL CONFORM TO AWWA C651. ALL NEW WATER MAINS SHALL BE DISINFECTED AFTER THEY HAVE BEEN PRESSURE TESTED. THE MAIN SHALL BE THOROUGHLY FLUSHED AT A RATE OF 2 FEET PER SECOND WITH CLEAN WATER AFTER WHICH A CHLORINE SOLUTION OF 50 PARTS PER MILLION SHALL BE INDUCED. THE CHLORINE SOLUTION SHALL REMAIN IN THE LINES FOR A MINIMUM OF 24 HOURS. THE LINES SHALL AGAIN BE FLUSHED AT A RATE OF 2 FEET PER SECOND WITH CLEAN WATER UNTIL THE CHLORINE RESIDUAL IS REDUCED TO THAT OF THE SUPPORTING SYSTEM. SAMPLES SHALL BE THEN COLLECTED AND TESTED FOR COLIFORM BACTERIA. ANALYSIS SHALL BE BY A STATE CERTIFIED LABORATORY USING THE MULTIPLE TUBE FEREMENTATION METHOD. ONE SAMPLE SHALL BE COLLECTED FROM EACH DEAD END SEGMENT OF THE PIPELINES INSTALLED. IF BACTERIA OF ANY TIME IS FOUND, THE TEST SHALL BE REPEATED UNTIL THE LINES ARE CLEAN.

BB. WATER MAIN SHALL HAVE 14 GA. BLUE COATED TRACER WIRE ON ALL SERVICES AND MAINS BURIED OVER THE WATER MAIN.

CC. FIRE HYDRANTS SHALL BE PLACED A MINIMUM DISTANCE OF 6' BOC AND HAVE A CLEAR SPACE OF 3' FROM ANY PERMANENT STRUCTURES.

DD. WATER VALVES SHALL COMPLY WITH APPROPRIATE AWWA STANDARDS.
1. GATE VALVES 2-INCHES: SHALL CONFORM TO ANSI/AWWA A21.11/C111 FOR CAST IRON BODIED, BRONZE MOUNTED, PARALLEL DOUBLE DISC, NON RISING STEM VALVES. VALVES SHALL BE RATED AT 200 PSIG WORKING PRESSURE AND 400 PSIG TEST PRESSURE. END CONNECTIONS SHALL BE STANDARD FEMALE IRON PIPE THREADS OR ANSI/AWWA A21.11/C111 MECHANICAL JOINTS FOR BURIED LOCATIONS ADN ANSI B16.1 FLANGES FOR EXPOSED LOCATIONS. VALVE OPERATOR SHALL BE A 2 INCH SQUARE NUT FOR BURIED LOCATIONS AND STANDARD HANDWHEEL FOR EXPOSED LOCATIONS. ALL VALVES SHALL BE OPEN LEFT.
2. GATE VALVES 6-INCHES THROUGH 16-INCHES: SHALL CONFORM TO AWWA C509 FOR BRONZE MOUNTED, RESILIENT SEATED, CAST IRON BODIED GATE VALVES. VALVE BODY SHALL BE RATED FOR 200 PSIG WORKING PRESSURE AND 400 PSIG TEST PRESSURE. PROVIDE VALVE WITH SOLID WEDGE, NON RISING STEM CONSTRUCTION. VALVES SHALL EBE SEALED RUBBER "O" RING SEALS BOTH ABOVE AND BELOW THE THRUST RING. VALVES STEMS SHALL BE OF BRONZE. INTERIOR OF THE VALVES SHALL BE COATED IN ACCORDANCE WITH AWWA C550. END CONNECTIONS SHALL CONFORM TO ANSI/AWWA AS2.22/C111 MECHANICAL JOINTS FOR BURIED LOCATIONS AND ANSI B16.1 FLANGES FOR EXPOSED LOCATIONS. VALVE OPERATORS SHALL BE 2 INCH SQUARE NUTS FOR BURIED LOCATIONS OR STANDARD HANDWHEEL FOR EXPOSED LOCATIONS. ALL VALVES SHALL BE OPEN LEFT. IN LINE VALVES TO BE INSTALLED EVERY 2000 FEET OR EVERY OTHER HYDRANT.

EE. WATER MAINS SHALL BE SUBJECT TO BOTH A PRESSURE TEST AND A LEAKAGE TEST. THE CONTRACTOR MAY BE BILLED FOR THE AMOUNT OF WATER USED.
1. PRESSURE TEST: SHALL CONFORM TO AWWA STANDARD C605 FOR PVC PIPE AND AWWA C600 FOR DUCTILE IRON. THE TEST PRESSURE SHALL BE 200 PSIG AND THE DURATION OF THE TEST SHALL BE NOT LESS THAN 2 HOURS OR MORE THAN 24 HOURS. THE DURATION OF THE TEST WILL BE DETERMINED BY THE COUNTY ENGINEER AS THE TEST PROGRESSES. PRESSURE SHALL NOT BE ALLOWED TO VARY MORE THAN 5 PSIG DURING THE TEST.
2. LEAKAGE TEST: SHALL BE CONDUCTED ALONG WITH THE PRESSURE TEST. LEAKAGE WILL BE DEFINED AS THE AMOUNT OF WATER THAT MUST BE SUPPLIED TO THE NEWLY LAID LINES TO MAINTAIN THE TEST PRESSURE WITHIN A 5 PSIG RANGE OVER A SPECIFIED PERIOD OF TIME. ALLOWABLE LEAKAGE WILL BE COMPUTED BY THE FOLLOWING FORMULA:

$$L = (S)\,(D)\,(\sqrt{P}) / 148{,}000$$

WHERE:
L = ALLOWABLE LEAKAGE IN GALLONS PER HOUR
S = LENGTH OF PIPE TESTED, IN FEET
D = NOMINAL DIAMETER OF PIPE IN INCHES
P = TEST PRESSURE IN PSIG
BUT NOT MORE THAN: 12.1 GALLONS PER INCH OF DIAMETER PER MILE OF PIPE PER 24 HOURS BASED ON 200 PSI TEST PRESSURE.

EAGLE ENGINEERING
FIRM LICENSE # C-0873
2013A Van Buren Avenue
Indian Trail, NC 28079
(704) 882-4222
P.O. BOX 551
Alpharetta, GA 30009
(678) 339-0640
www.eagleonline.net

NO.	DATE	BY	ISSUE
1	4-9-18	KEW	1st PLANCHECK REVISIONS PER TOWN & NCDOT
2	6-12-18	KEW	2nd PLANCHECK REVISIONS PER TOWN & NCDOT
3	8-1-18	KEW	3rd PLANCHECK REVISIONS PER TOWN & NCDOT

ALDI GROCERY STORE #06
TOWN OF WAXHAW, UNION COUNTY, NC

FOR THE BENEFIT OF:
ALDI, INC. - SALISBURY DIVISION
1985 OLD UNION CHURCH ROAD
SALISBURY, NC 28146

STANDARD SPECIFICATIONS

DESIGNED BY	DRAWN BY	CHECKED BY
KEW	KEW	JHR
Scale	DATE	JOB NUMBER
AS SHOWN	12-4-2017	6076

NORTH CAROLINA PROFESSIONAL ENGINEER SEAL 14959 JOHNNY HOUSTON ROSS
2-26-18

Sheet
C-3.3

GENERAL NOTES:

1. CONSTRUCTION FOR ALDI WILL CONSIST OF THE FOLLOWING AS SHOWN ON THESE CONSTRUCTION DOCUMENTS:
   - EROSION CONTROL MEASURES AS SHOWN ON SHEET C-3.0
   - ALL WATER, SEWER, AND STORM DRAIN FACILITIES WITHIN THE LIMITS OF CONSTRUCTION AS SHOWN ON EROSION CONTROL SHEET C-3.0
2. THE OVERALL SITE IMPROVEMENTS AND INFRASTRUCTURE SHALL BE IN PLACE PER THE "CARRINGTON SQUARE" CONSTRUCTION DOCUMENTS. CONTRACTOR TO VERIFY THAT ALL INFRASTRUCTURE IS FULLY FUNCTIONAL AND ALL OUTFALL PROVISIONS ARE IN PLACE PRIOR TO TIE-IN TO EXISTING UTILITY SYSTEMS.
3. ALL PARCELS WILL BE ROUGH AND FINE GRADED AS SHOWN ON THESE GRADING PLANS. BUILDING CONSTRUCTION WILL NOT BE DONE UNDER THIS PERMIT. FUTURE DEVELOPMENT OF REMAINING PARCELS WILL REQUIRE A SEPARATE PERMIT.
4. THE ANTICIPATED CONSTRUCTION SEQUENCE IS THE FOLLOWING:
   - INSTALLATION OF EROSION CONTROL MEASURES (SEE SHEETS C-3.0 FOR FURTHER EROSION CONTROL SEQUENCING INFORMATION)
   - UPON STABILIZATION OF EROSION CONTROL MEASURES, GRADING OPERATIONS WILL TAKE PLACE
   - UPON NEAR COMPLETEION OF GRADING OPERATIONS, ALL PROPOSED UTILTIES SHALL BE CONSTRUCTED
   - BUILDING SLAB SHALL BE CONSTRUCTED
   - FINAL PAVEMENT INSTALLATION
6. CONSTRUCTION ANTICIPATED TO COMMENCE WITHIN 30 DAYS OF PLAN APPROVAL. CONSTRUCTION DURATION ANTICIPATED TO BE FROM JUNE 2018 TO DECEMBER 2019.
7. ACCESSIBLE ROUTES SHALL NOT EXCEED A CROSS SLOPE OF 2% AND LONGITUDINAL SLOPE OF 5% OR SMALLER.
8. PER THE PHASE 2 EROSION CONTROL FOR "CARRINGTON SQUARE", ALL CATCH BASIN HOODS SHALL NOT BE INSTALLED TO ALLOW POSITIVE DRAINAGE INTO THE CATCH BASIN DURING CONSTRUCTION. ONLY CATCH BASINS SHOWN WITHIN THE PROPOSED CURB AND GUTTER, AND PAVEMENT, SHALL HAVE THEIR HOODS INSTALLED.

SITE IMPROVEMENTS PER "CARRINGTON SQUARE" CONSTRUCTION DOCUMENTS (NOT A PART)

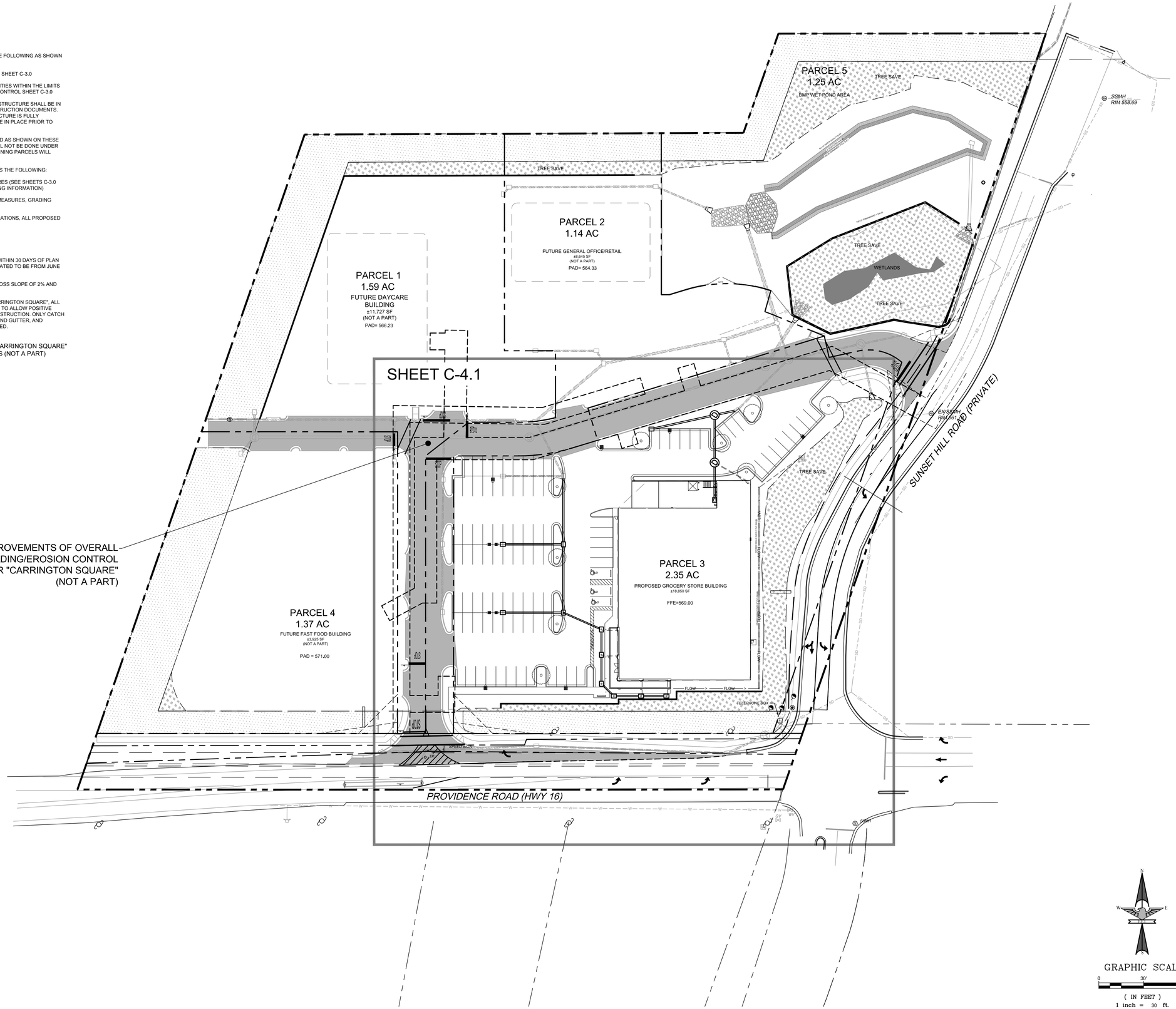

GRAPHIC SCALE
0 30' 60'
(IN FEET)
1 inch = 30 ft.

EAGLE ENGINEERING
FIRM LICENSE # C-0873
2013A Van Buren Avenue
Indian Trail, NC 28079
(704) 882-4222
P.O. BOX 551
Alpharetta, GA 30009
(678) 339-0640
www.eagleonline.net

NO.	DATE	BY	ISSUE
1	4-9-18	KEW	1st PLANCHECK REVISIONS PER TOWN & NCDOT
2	6-12-18	KEW	2nd PLANCHECK REVISIONS PER TOWN & NCDOT
3	8-1-18	KEW	3rd PLANCHECK REVISIONS PER TOWN & NCDOT

ALDI GROCERY STORE #06

TOWN OF WAXHAW, UNION COUNTY, NC

FOR THE BENEFIT OF:

ALDI, INC. - SALISBURY DIVISION
1985 OLD UNION CHURCH ROAD
SALISBURY, NC 28146

GRADING PLAN-OVERALL

DESIGNED BY	KEW	DRAWN BY	KEW
CHECKED BY	JHR		
Scale	AS SHOWN	DATE	12-4-2017
JOB NUMBER	6076		

NORTH CAROLINA PROFESSIONAL SEAL 14069 ENGINEER JOHNNY HOUSTON ROSS
2-26-18

Sheet
C-4.0

PARCEL 3
2.35 AC

PROPOSED GROCERY STORE BUILDING
±18,850 SF

FFE=569.00

TREE SAVE

SUNSET HILL ROAD (PRIVATE)

PROVIDENCE ROAD (HWY 16)

RAISE EXISTING CATCH BASIN TO FINISHED GRADE

PROPOSED 12" PVC ROOF DRAIN FROM ARCHITECTS PLANS

CURB IN FRONT OF ADA SPACES TO BE DEPRESSED EVEN WITH PAVEMENT

PROPOSED GRADED SWALE OVER 6" PVC DRAIN PIPE, SEE "SWALE DETAIL" ON THIS SHEET AND SEE NYLOPLAST DETAIL SHEET C-6.0

PROPOSED 8" PVC ROOF DRAIN FROM ARCHITECTS PLANS, SEE NYLOPLAST DETAIL ON SHEET C-6.0 FOR DETAILS OF PVC CLEANOUTS

EXISTING RETAINING WALL PER SHEET C-4.1 OF THE "CARRINGTON SQUARE" CONSTRUCTION DOCUMENTS

PROPOSED RIP-RAP APRON SDD#18 L=5', W=9

564.00 INV IN

565.00 INV OUT

NO PARKING

STOP

SPEED SIGN

TELEPHONE BOX

EX SSMH RIM 561.78

MH-400

CB-402

CB-401

CB-403

CB-204A

CB-204B

CB-204C

DI-204D

DI-204E

DI-204F

CB-216

CB-214

MH-215A

DI-216A

MH-301

MH-302

24" RCP

48" RCP

5'

PROPOSED SWALE 6" DEEP WITH GRASS GROUND COVER

1' MIN COVER

PROPOSED 6" PVC DRAIN PIPE

SWALE DETAIL
NOT TO SCALE

GRAPHIC SCALE
0 20' 40'
(IN FEET)
1 inch = 20 ft.

EAGLE ENGINEERING
FIRM LICENSE # C-0873
2013A Van Buren Avenue
Indian Trail, NC 28079
(704) 882-4222
P.O. BOX 551
Alpharetta, GA 30009
(678) 339-0640
www.eagleonline.net

NO.	DATE	BY	ISSUE
1	4-9-18	KEW	1st PLANCHECK REVISIONS PER TOWN & NCDOT
2	6-12-18	KEW	2nd PLANCHECK REVISIONS PER TOWN & NCDOT
3	8-1-18	KEW	3rd PLANCHECK REVISIONS PER TOWN & NCDOT

ALDI GROCERY STORE #06

TOWN OF WAXHAW, UNION COUNTY, NC

FOR THE BENEFIT OF:

ALDI, INC. - SALISBURY DIVISION
1985 OLD UNION CHURCH ROAD
SALISBURY, NC 28146

FINISH GRADING PLAN

DESIGNED BY	DRAWN BY	CHECKED BY
KEW	KEW	JHR
Scale	DATE	JOB NUMBER
AS SHOWN	12-4-2017	6076

NORTH CAROLINA PROFESSIONAL SEAL 14959 ENGINEER JOHNNY HOUSTON ROSS
2-26-18

Sheet
C-4.1

SD-203 PROFILE

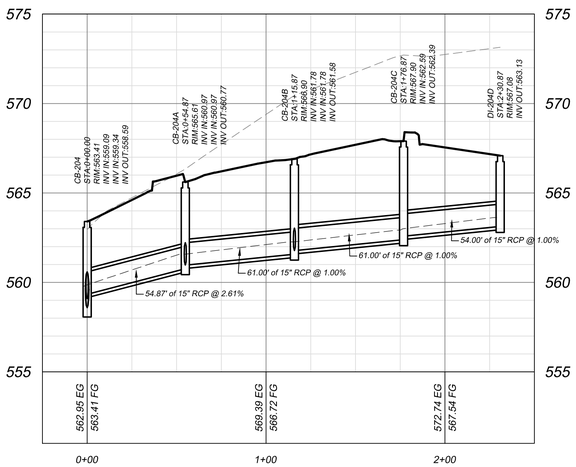

SD-203A PROFILE

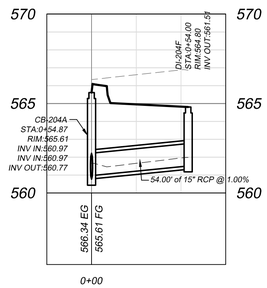

SD-203B PROFILE

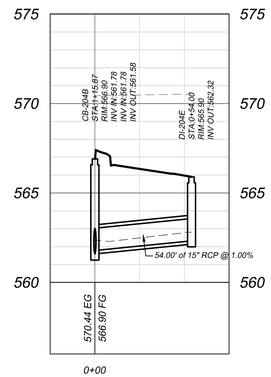

SD-205 PROFILE

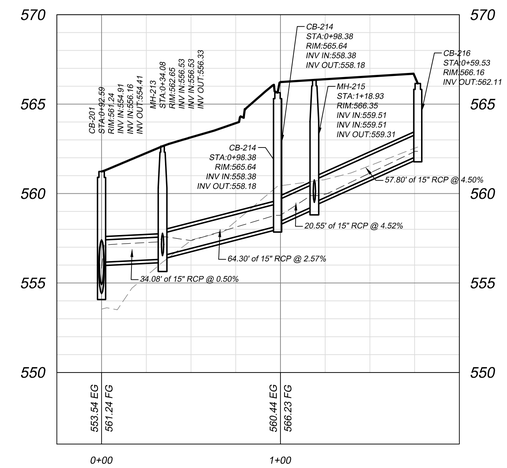

SD-205A PROFILE

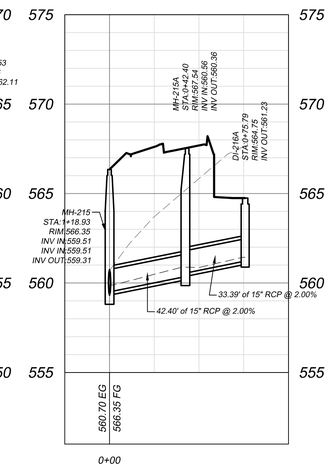

ROOF DRAINS PROFILE

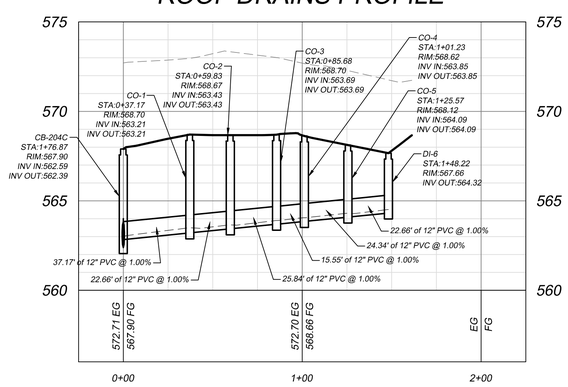

VERTICAL SCALE
(IN FEET)
1 inch = 4 ft.

GRAPHIC SCALE
0 40' 80'
(IN FEET)
1 inch = 40 ft.

EAGLE ENGINEERING
FIRM LICENSE # C-0873
2013A Van Buren Avenue
Indian Trail, NC 28079
(704) 882-4222
P.O. BOX 551
Alpharetta, GA 30009
(678) 339-0640
www.eagleonline.net

NO.	DATE	BY	ISSUE
1	4-9-18	KEW	1st PLANCHECK REVISIONS PER TOWN & NCDOT
2	6-12-18	KEW	2nd PLANCHECK REVISIONS PER TOWN & NCDOT
3	8-1-18	KEW	3rd PLANCHECK REVISIONS PER TOWN & NCDOT

ALDI GROCERY STORE #06

TOWN OF WAXHAW, UNION COUNTY, NC

FOR THE BENEFIT OF:

ALDI, INC. - SALISBURY DIVISION
1985 OLD UNION CHURCH ROAD
SALISBURY, NC 28146

STORM DRAINAGE PLAN & PROFILE

DESIGNED BY	KEW	CHECKED BY	JHR
DRAWN BY	KEW	JOB NUMBER	6076
DATE	12-4-2017		
Scale	AS SHOWN		

NORTH CAROLINA PROFESSIONAL SEAL 14069 ENGINEER JOHNNY HOUSTON ROSS

2-26-18

Sheet

C-4.2

ESTIMATED CONSUMPTIONS	
WATER	
DAYCARE	5000 GALLONS PER DAY
GROCERY STORE	2451 GALLONS PER DAY
GENERAL OFFICE	625 GALLONS PER DAY
RESTAURANT	3120 GALLONS PER DAY
IRRIGATION	7764 GALLONS PER DAY
TOTAL	18960 GALLONS PER DAY
SEWER	
DAYCARE	5000 GALLONS PER DAY
GROCERY STORE	2451 GALLONS PER DAY
GENERAL OFFICE	625 GALLONS PER DAY
RESTAURANT	3120 GALLONS PER DAY
TOTAL	11196 GALLONS PER DAY

ESTIMATED CONSUMPTIONS CALCULATIONS

WATER

GROCERY STORE (WATER METER SIZE = 1 ½")
18,850 SF x (130 GAL / 1000 SF) = ~2,451 GPD

SEWER

GROCERY STORE (SEWER LATERAL SIZE = 4")
18,850 SF x (130 GAL / 1000 SF) = ~2,451 GPD

ALL RATES BASED UPON NORTH CAROLINA ADMINISTRATIVE CODE TITLE 15A SUBCHAPTER 2T - WASTE NOT DISCHARGED TO SURFACE WATERS SECTION 0114.

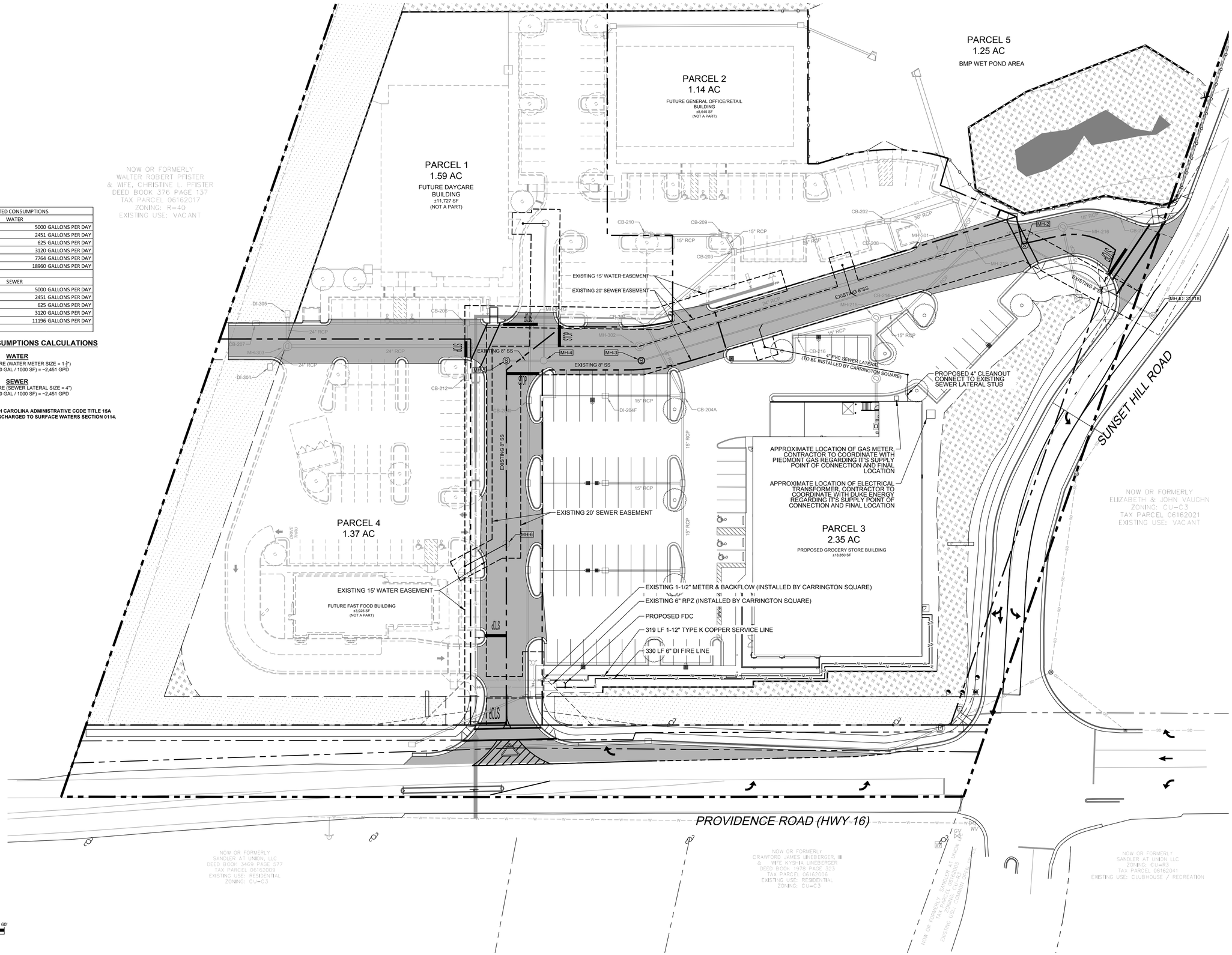

EAGLE ENGINEERING
FIRM LICENSE # C-0873
2013A Van Buren Avenue
Indian Trail, NC 28079
(704) 882-4222
P.O. BOX 551
Alpharetta, GA 30009
(678) 339-0640
www.eagleonline.net

NO.	DATE	BY	ISSUE
1	4-9-18	KEW	1st PLANCHECK REVISIONS PER TOWN & NCDOT
2	6-12-18	KEW	2nd PLANCHECK REVISIONS PER TOWN & NCDOT
3	8-1-18	KEW	3rd PLANCHECK REVISIONS PER TOWN & NCDOT

ALDI GROCERY STORE #06

TOWN OF WAXHAW, UNION COUNTY, NC

FOR THE BENEFIT OF:

ALDI, INC. - SALISBURY DIVISION
1985 OLD UNION CHURCH ROAD
SALISBURY, NC 28146

UTILITY PLAN-OVERALL

DESIGNED BY	KEW	DRAWN BY	KEW
Scale	AS SHOWN	DATE	12-4-2017
CHECKED BY	JHR	JOB NUMBER	6076

NORTH CAROLINA PROFESSIONAL ENGINEER SEAL 14009 JOHNNY HOUSTON ROSS
2-26-18

Sheet

C-5.0

STATE OF NORTH CAROLINA
DEPT. OF TRANSPORTATION
DIVISION OF HIGHWAYS
RALEIGH, N.C.

1-12

ENGLISH STANDARD DRAWING FOR
CONCRETE CATCH BASIN
12" THRU 54" PIPE

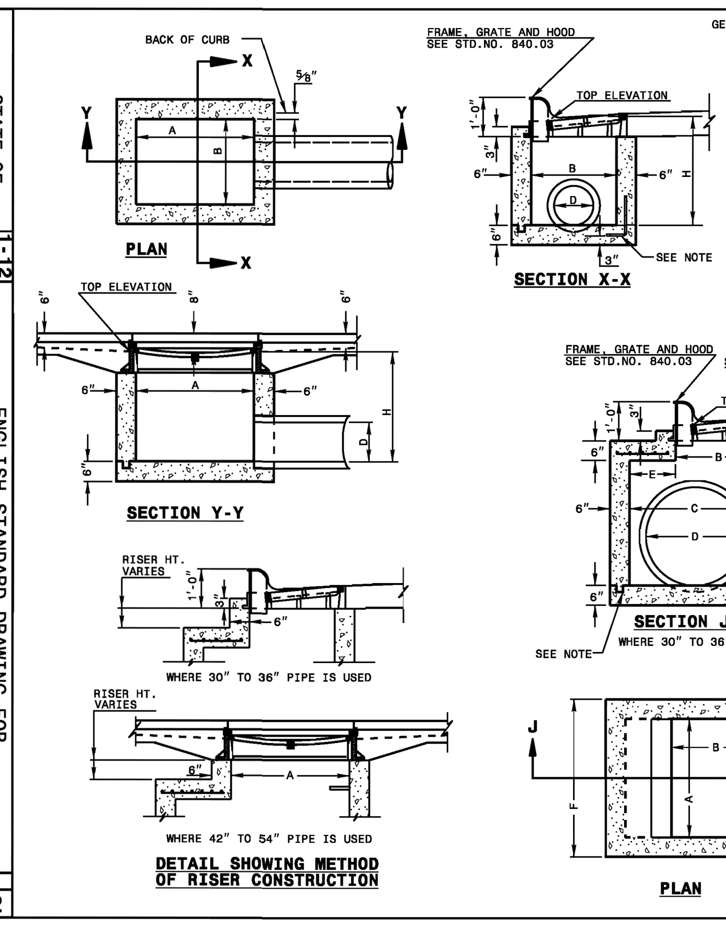

GENERAL NOTES:

USE CLASS "B" CONCRETE THROUGHOUT.

PROVIDE ALL CATCH BASINS OVER 3'-6" IN DEPTH WITH STEPS 12" ON CENTER. USE STEPS WHICH COMPLY WITH STD. DRAWING 840.66.

OPTIONAL CONSTRUCTION - MONOLITHIC POUR, 2" KEYWAY, OR #4 BAR DOWELS AT 12" CENTERS AS DIRECTED BY THE ENGINEER.

USE FORMS FOR THE CONSTRUCTION OF THE BOTTOM SLAB.

IF REINFORCED CONCRETE PIPE IS SET IN BOTTOM SLAB OF BOX, ADD TO SLAB AS SHOWN ON STD. NO. 840.00.

USE TYPE "E", "F" AND "G" GRATES UNLESS OTHERWISE INDICATED.

FOR 8'-0" IN HEIGHT OR LESS USE 6" WALLS AND BOTTOM SLAB. OVER 8'-0" TO 16'-0" IN HEIGHT USE 8" WALLS AND BOTTOM SLAB. ADJUST QUANTITIES ACCORDINGLY.

CONSTRUCT WITH PIPE CROWNS MATCHING.

CHAMFER ALL EXPOSED CORNERS 1".

DRAWING NOT TO SCALE.

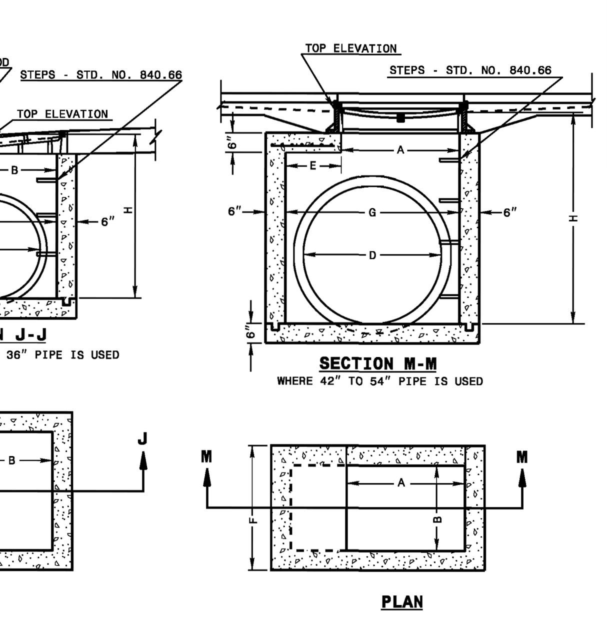

STATE OF NORTH CAROLINA
DEPT. OF TRANSPORTATION
DIVISION OF HIGHWAYS
RALEIGH, N.C.

ENGLISH STANDARD DRAWING FOR
CONCRETE CATCH BASIN
12" THRU 54" PIPE

SHEET 1 OF 2
840.02

STATE OF NORTH CAROLINA
DEPT. OF TRANSPORTATION
DIVISION OF HIGHWAYS
RALEIGH, N.C.

ENGLISH STANDARD DRAWING FOR
CONCRETE CATCH BASIN
12" THRU 54" PIPE

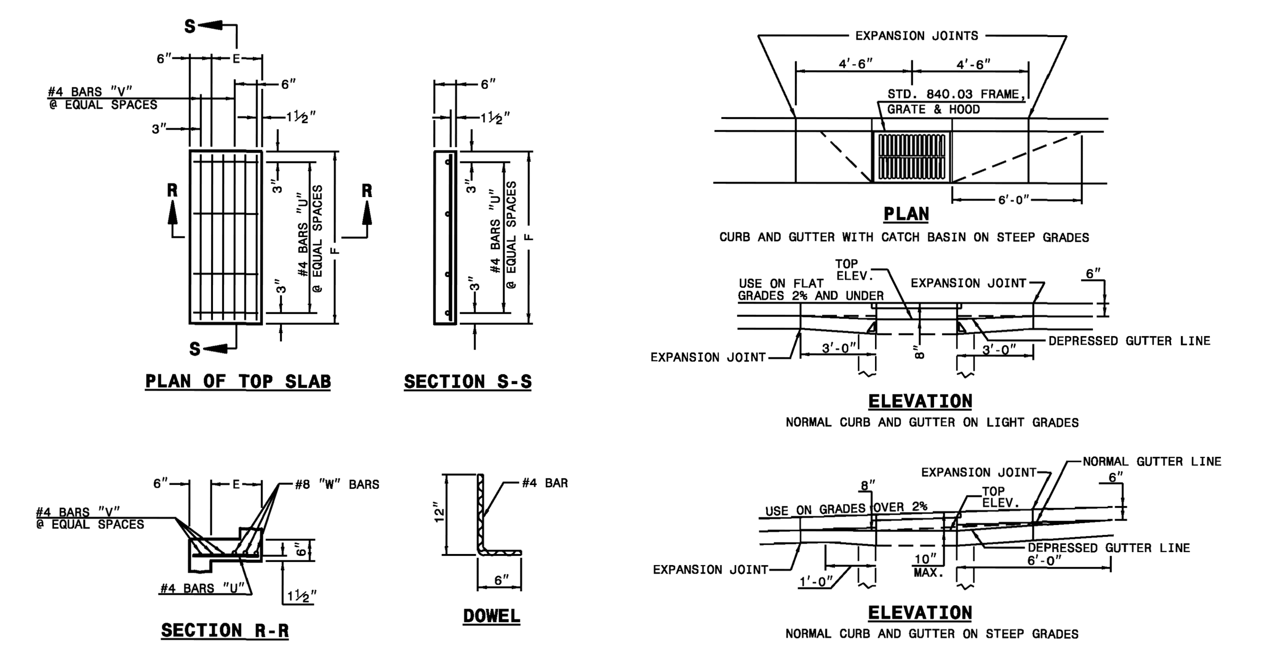

MINIMUM DIMENSIONS AND QUANTITIES FOR CONCRETE CATCH BASIN (BASED ON MIN. HEIGHT, H, WITH NO RISER) *

DIMENSIONS OF BOX AND PIPE						COVER DIMENSION		BARS-U		BARS-V		BARS-W		TOTAL LBS.	CU.YDS. CONC. IN BOX			DEDUCTIONS ONE PIPE	
PIPE	SPAN	WIDTH	WIDTH	SPAN	MIN. HEIGHT										TOP SLAB	BOTTOM SLAB	TOT. CONC. FOR MINIMUM HEIGHT, H		
D	A	B	C	G	H	E	F	NO.	LENGTH	NO.	LENGTH	NO.	LENGTH					C.M.	R.C.
12"	3'-0"	2'-2"	--	--	2'-9"	--	--	--	--	--	--	--	--	--	--	0.235	0.772	0.015	0.026
15"	3'-0"	2'-2"			3'-0"											0.235	0.829	0.023	0.036
18"	3'-0"	2'-2"			3'-3"											0.235	0.887	0.033	0.049
24"	3'-0"	2'-2"			3'-9"											0.235	1.001	0.059	0.085
30"	3'-0"	2'-2"	3'-4"		4'-3"	1'-2"	4'-0"	4	1'-5"	2	3'-9"	3	3'-9"	39	0.123	0.321	1.433	0.092	0.127
36"	3'-0"	2'-2"	3'-10"		4'-9"	1'-8"	4'-0"	4	1'-11"	3	3'-9"	3	3'-9"	43	0.161	0.358	1.714	0.132	0.178
42"	3'-0"	2'-2"		4'-5"	5'-3"	1'-5"	3'-2"	4	1'-8"	2	2'-11"	3	2'-11"	32	0.112	0.318	1.738	0.180	0.243
48"	3'-0"	2'-2"		5'-0"	5'-9"	2'-0"	3'-2"	4	2'-3"	3	2'-11"	3	2'-11"	35	0.145	0.352	2.052	0.235	0.317
54"	3'-0"	2'-2"		5'-7"	6'-3"	2'-7"	3'-2"	4	2'-10"	5	2'-11"	3	2'-11"	41	0.180	0.386	2.387	0.297	0.401

* RISER HAS .228 CUBIC YARDS OF CONCRETE PER FOOT HEIGHT

SHEET 2 OF 2
840.02

STATE OF NORTH CAROLINA
DEPT. OF TRANSPORTATION
DIVISION OF HIGHWAYS
RALEIGH, N.C.

1-12

ENGLISH STANDARD DRAWING FOR
CONCRETE DROP INLET
12" THRU 30" PIPE

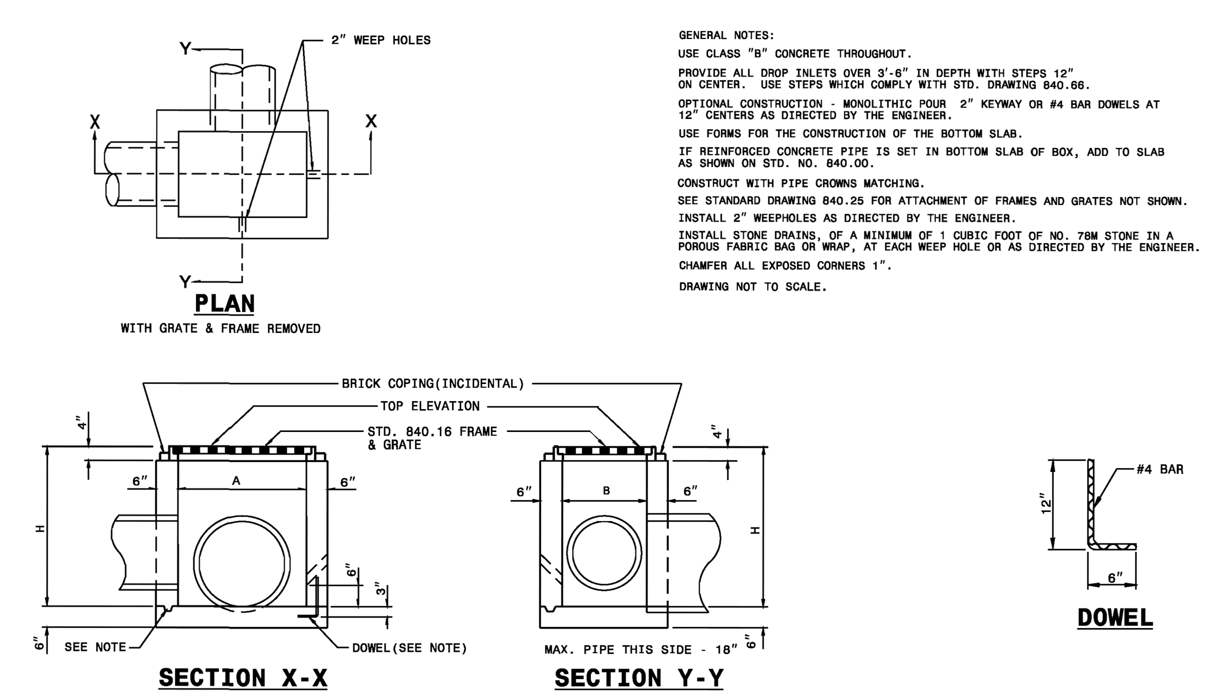

GENERAL NOTES:

USE CLASS "B" CONCRETE THROUGHOUT.

PROVIDE ALL DROP INLETS OVER 3'-6" IN DEPTH WITH STEPS 12" ON CENTER. USE STEPS WHICH COMPLY WITH STD. DRAWING 840.66.

OPTIONAL CONSTRUCTION - MONOLITHIC POUR 2" KEYWAY OR #4 BAR DOWELS AT 12" CENTERS AS DIRECTED BY THE ENGINEER.

USE FORMS FOR THE CONSTRUCTION OF THE BOTTOM SLAB.

IF REINFORCED CONCRETE PIPE IS SET IN BOTTOM SLAB OF BOX, ADD TO SLAB AS SHOWN ON STD. NO. 840.00.

CONSTRUCT WITH PIPE CROWNS MATCHING.

SEE STANDARD DRAWING 840.25 FOR ATTACHMENT OF FRAMES AND GRATES NOT SHOWN.

INSTALL 2" WEEPHOLES AS DIRECTED BY THE ENGINEER.

INSTALL STONE DRAINS, OF A MINIMUM OF 1 CUBIC FOOT OF NO. 78M STONE IN A POROUS FABRIC BAG OR WRAP, AT EACH WEEP HOLE OR AS DIRECTED BY THE ENGINEER.

CHAMFER ALL EXPOSED CORNERS 1".

DRAWING NOT TO SCALE.

DIMENSIONS AND QUANTITIES FOR DROP INLET (BASED ON MIN. HEIGHT, H)

DIMENSIONS OF BOX & PIPE				CUBIC YARDS CONC. IN BOX			DEDUCTIONS FOR ONE PIPE	
PIPE	SPAN	WIDTH	MIN. HEIGHT					
D	A	B	H	BOTTOM SLAB	WALL PER FT. HT.	TOTAL CONCRETE FOR MINIMUM HEIGHT, H	C.M.	R.C.
12"	3'-0"	2'-0"	2'-0"	0.222	0.222	0.592	0.015	0.026
15"	/	/	2'-3"	/	/	0.648	0.023	0.036
18"			2'-6"			0.703	0.033	0.049
24"			3'-0"			0.814	0.059	0.085
30"	3'-0"	2'-0"	3'-6"	0.222	0.222	0.925	0.092	0.127

STATE OF NORTH CAROLINA
DEPT. OF TRANSPORTATION
DIVISION OF HIGHWAYS
RALEIGH, N.C.

ENGLISH STANDARD DRAWING FOR
CONCRETE DROP INLET
12" THRU 30" PIPE

SHEET 1 OF 1
840.14

NYLOPLAST DRAIN BASIN WITH PEDESTRIAN GRATE

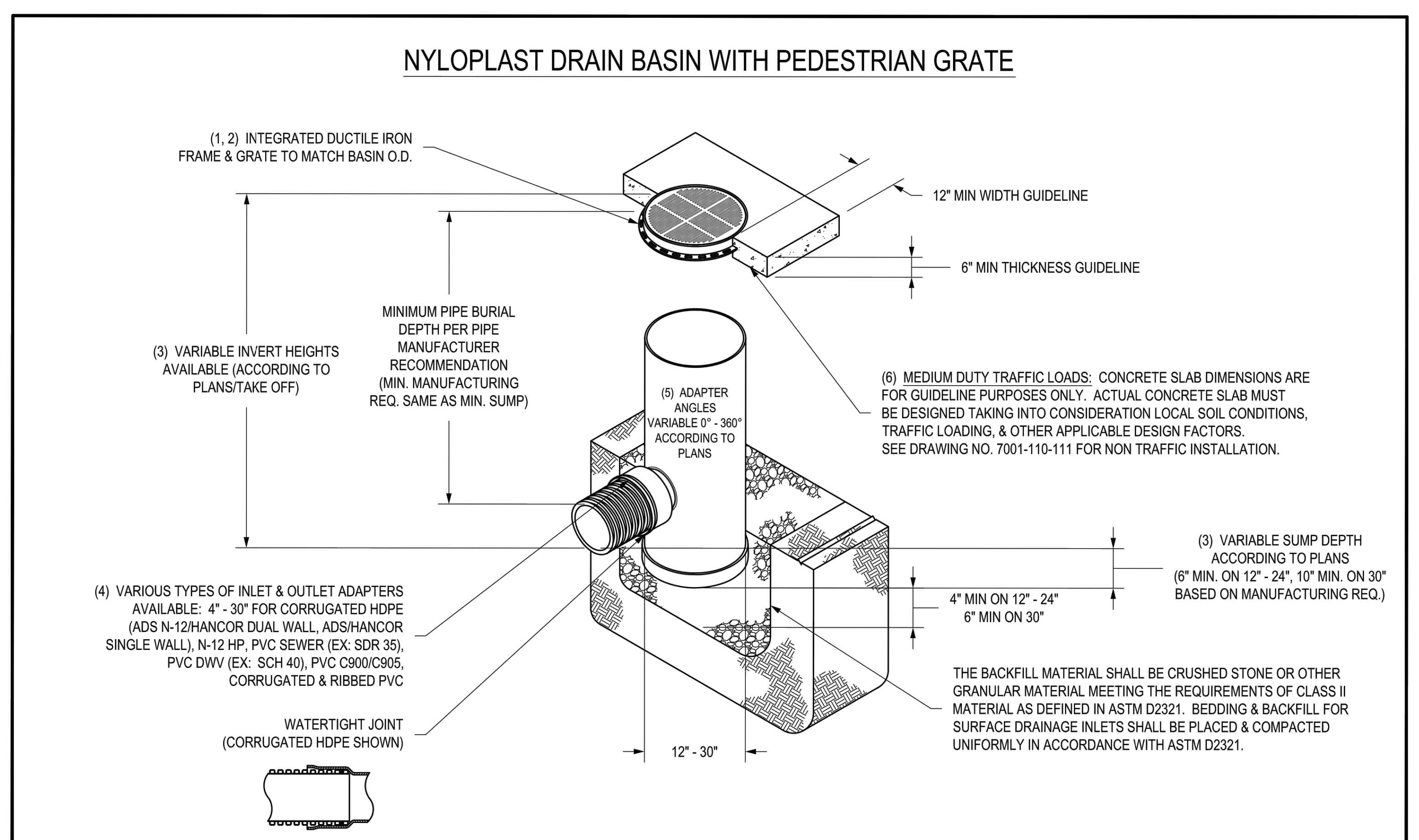

1 - 12" - 30" PEDESTRIAN GRATES SHALL BE DUCTILE IRON PER ASTM A536 GRADE 70-50-05.
2 - 12" - 30" FRAMES SHALL BE DUCTILE IRON PER ASTM A536 GRADE 70-50-05.
3 - DRAIN BASIN TO BE CUSTOM MANUFACTURED ACCORDING TO PLAN DETAILS. RISERS ARE NEEDED FOR BASINS OVER 84" DUE TO SHIPPING RESTRICTIONS. SEE DRAWING NO. 7001-110-065.
4 - DRAINAGE CONNECTION STUB JOINT TIGHTNESS SHALL CONFORM TO ASTM D3212 FOR CORRUGATED HDPE (ADS N-12/HANCOR DUAL WALL), N-12 HP, & PVC SEWER (4" - 24").
5 - ADAPTERS CAN BE MOUNTED ON ANY ANGLE 0° TO 360°. TO DETERMINE MINIMUM ANGLE BETWEEN ADAPTERS SEE DRAWING NO. 7001-110-012.
6 - 12" - 24" PEDESTRIAN GRATES SHALL MEET H-10 LOAD RATING. 30" PEDESTRIAN GRATE SHALL MEET H-20 LOAD RATING (SEE DRAWING NO. 7001-110-144 FOR H-20 TRAFFIC LOAD GUIDELINES).

THIS PRINT DISCLOSES SUBJECT MATTER IN WHICH NYLOPLAST HAS PROPRIETARY RIGHTS. THE RECEIPT OR POSSESSION OF THIS PRINT DOES NOT CONFER, TRANSFER, OR LICENSE THE USE OF THE DESIGN OR TECHNICAL INFORMATION SHOWN HEREIN. REPRODUCTION OF THIS PRINT OR ANY INFORMATION CONTAINED HEREIN, OR MANUFACTURE OF ANY ARTICLE HEREFROM, FOR THE DISCLOSURE TO OTHERS IS FORBIDDEN, EXCEPT BY SPECIFIC WRITTEN PERMISSION FROM NYLOPLAST. ©2010 NYLOPLAST

DRAWN BY EBC | DATE 4-20-07 | REVISED BY EBC | DATE 3-14-10 | DWG SIZE A
MATERIAL | PROJECT NO./NAME | SCALE 1:40 | SHEET 1 OF 1

Nyloplast
3130 VERONA AVE
BUFORD, GA 30518
PHN (770) 932-2443
FAX (770) 932-2490
www.nyloplast-us.com

TITLE: DRAIN BASIN WITH PEDESTRIAN GRATE QUICK SPEC INSTALLATION DETAIL
DWG NO. 7001-110-283 REV B

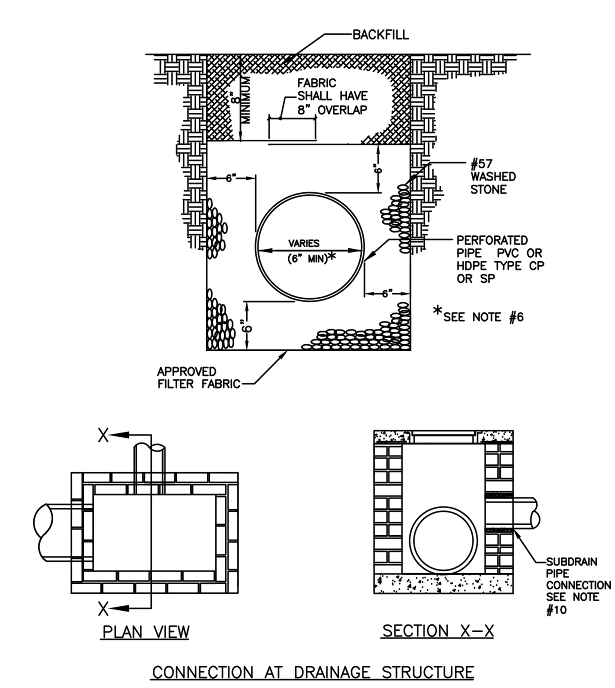

CONNECTION AT DRAINAGE STRUCTURE
NOTE: STRUCTURE SHOWN FOR REPRESENTATION PURPOSES ONLY.

NOTES:

1. A MINIMUM OF 6" FROM OUTSIDE DIAMETER OF PIPE TO SIDE OF TRENCH MUST BE ALLOWED FOR WASHED STONE. THE METHOD OF COMPACTING BACKFILL MATERIAL IS SUBJECT TO APPROVAL BY THE TOWN ENGINEER. AN APPROVED FILTER FABRIC SHALL BE PLACED AROUND STONE AND OVERLAPPED 8" AT TOP WITHIN STREET RIGHT OF WAY.
2. SUBDRAIN IS TO BE A MINIMUM 6" DIAMETER PERFORATED PIPE; USE SCHEDULE 40 PVC PER ASTM D1785 OR HDPE PER AASHTO M252, TYPE CP (SINGLE–WALL, CORRUGATED) OR TYPE SP (DOUBLE–WALL, SMOOTH INTERIOR).
3. OUTLET PIPE FROM SUBDRAIN SHALL BE NON–PERFORATED UNDER PAVEMENT (INCLUDING SIDEWALKS AND DRIVEWAYS). SEE SITE PLAN FOR SLOPE OF SUBDRAIN AND TIE IN TO STORM DRAINAGE.
4. THE OUTLET PIPES SHALL BE SCHEDULE 40 (MIN.) PVC PER ASTM D2665 OR HDPE PER AASHTO M252, TYPE S (DOUBLE WALL, SMOOTH INTERIOR) UNDER ROADWAYS.
5. FILTER FABRIC SHALL BE AN APPROVED, TYPE 2 WATER PERMEABLE, SYNTHETIC FABRIC.
6. A MINIMUM 4" DIAMETER SUBDRAIN MAY BE USED IN PLANTING AREAS.
7. CLEAN–OUTS ARE RECOMMENDED AT ALL PIPE INTERSECTIONS AND AT A 100' MAXIMUM SEPARATION.
8. SUBDRAIN INVERTS AT CATCH BASINS SHOULD BE INSTALLED ABOVE THE BOTTOM TO AVOID SURCHARGE OF SUBDRAIN SYSTEM.
9. ALL SUBDRAINS WILL TIE INTO A STANDARD DRAINAGE STRUCTURE OR DAYLIGHT TO THE SURFACE WHERE APPROPRIATE, AND NOT DIRECTLY INTO A PIPE.
10. ONLY REMOVE NECESSARY MASONRY UNITS TO INSTALL PIPE INTO BASIN WALL. PRECAST STRUCTURES WILL BE CORE DRILLED 2 INCHES LARGER THAN PIPE DIAMETER TO PROVIDE FOR INSTALLATION OF PIPE IN WALL.
11. ALL PIPE IN STORM DRAIN STRUCTURE SHALL BE STRUCK EVEN WITH THE INSIDE WALL, GROUTED AND BRUSHED SMOOTH.
12. PIPE INSTALLATION PER SECTION 300 NCDOT STANDARD SPECIFICATIONS FOR ROADS AND STRUCTURES.
13. SUBDRAINS WILL BE INSTALLED AT A DRAINAGE STRUCTURE AND THIS CONNECTION WILL NEED TO BE INSPECTED BY TOWN STAFF PRIOR TO BACKFILLING.
14. SCHEDULE 40 PVC (NON–PERFORATED) SHALL BE USED TO MAKE THE CONNECTION TO THE STORM DRAINAGE SYSTEM. CONNECTION WILL BE WITHIN THE RIGHT–OF–WAY UNLESS OTHERWISE APPROVED BY THE TOWN ENGINEER.
15. PREFABRICATED DRAINAGE MAY BE USED WITH APPROVAL OF TOWN ENGINEER
16. MAXIMUM OF TWO SUBDRAIN PENETRATIONS PER WALL OF DRAINAGE STRUCTURE.

TOWN OF WAXHAW LAND DEVELOPMENT STANDARDS | SUBDRAIN DETAIL | STD. NO. 312.1 | REV.

NOTES:

1. CLASS OR MEDIAN SIZE OF RIPRAP AND LENGTH, WIDTH AND DEPTH OF APRON TO BE DESIGNED BY THE ENGINEER.
2. REFER TO THE TOWN OF WAXHAW STORM WATER DESIGN MANUAL FOR RIPRAP APRON DESIGN STANDARDS.
3. RIPRAP SHOULD EXTEND UP BOTH SIDES OF THE APRON AND AROUND THE END OF THE PIPE OR CULVERT AT THE DISCHARGE OUTLET AT A MAXIMUM SLOPE OF 2:1 AND A HEIGHT NOT LESS THAN TWO THIRDS THE PIPE DIAMETER OR CULVERT HEIGHT.
4. THERE SHALL BE NO OVERFLOW FROM THE END OF THE APRON TO THE SURFACE OF THE RECEIVING CHANNEL. THE AREA TO BE PAVED OR RIPRAPPED SHALL BE UNDERCUT SO THAT THE INVERT OF THE APRON SHALL BE AT THE SAME GRADE (FLUSH) WITH THE SURFACE OF THE RECEIVING CHANNEL. THE APRON SHALL HAVE A CUTOFF OR TOE WALL AT THE DOWNSTREAM END.
5. THE WIDTH OF THE END OF THE APRON SHALL BE EQUAL TO THE BOTTOM WIDTH OF THE RECEIVING CHANNEL. MAXIMUM TAPER TO RECEIVING CHANNEL 5:1
6. ALL SUBGRADE FOR STRUCTURE TO BE COMPACTED TO 95% OR GREATER.
7. THE PLACING OF FILL, EITHER LOOSE OR COMPACTED IN THE RECEIVING CHANNEL SHALL NOT BE ALLOWED.
8. NO BENDS OR CURVES IN THE HORIZONTAL ALIGNMENT OF THE APRON WILL BE PERMITTED.
9. FILTER FABRIC SHALL BE INSTALLED ON COMPACTED SUBGRADE PRIOR TO PLACEMENT OF RIP RAP.
10. ANY DISTURBED AREA FROM END OF APRON TO RECIEVING CHANNEL MUST BE STABILIZED.

USE USDA NOMOGRAPH FROM NC SEDIMENT AND EROSION CONTROL MANUAL OR THE TOWN OF WAXHAW STORM WATER DESIGN MANUAL FOR DESIGN DATA.

OUTLET	La	W1	W2	*T	H

* d50 (see fig 8.06 a&b "NC SEDIMENT AND EROSION CONTROL MANUAL"
dmax = 1.5 x d50
T = 1.5 X dmax.
T(min.)=10"

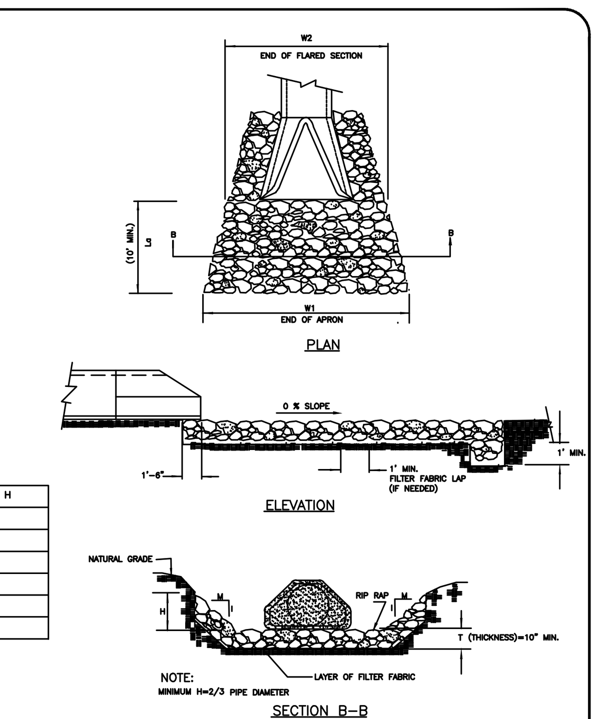

TOWN OF WAXHAW LAND DEVELOPMENT STANDARDS | RIPRAP APRON AT PIPE OUTFALLS OTHER THAN AT SWIM | STD. NO. 306.1 | REV.

EAGLE ENGINEERING
FIRM LICENSE # C-0873
2013A Van Buren Avenue
Indian Trail, NC 28079
(704) 882-4222
P.O. BOX 551
Alpharetta, GA 30009
(678) 339-0640
www.eagleonline.net

NO.	DATE	BY	ISSUE
1	4-9-18	KEW	1st PLANCHECK REVISIONS PER TOWN & NCDOT
2	6-12-18	KEW	2nd PLANCHECK REVISIONS PER TOWN & NCDOT
3	8-1-18	KEW	3rd PLANCHECK REVISIONS PER TOWN & NCDOT

CARRINGTON SQUARE
TOWN OF WAXHAW, UNION COUNTY, NC

FOR THE BENEFIT OF:
TRIBEK PROPERTIES
2820 SELWYN AVENUE #425
CHARLOTTE, NC 28209

SITE DETAILS - STORM

DESIGNED BY	DRAWN BY	CHECKED BY
KEW	KEW	JHR
Scale	DATE	JOB NUMBER
AS SHOWN	12-4-2017	5117

2-16-18

Sheet
C-6.0

NOTE:
A 27" DIAMETER PRE-CAST RING SHALL BE PLACED AROUND EACH VALVE BOX.

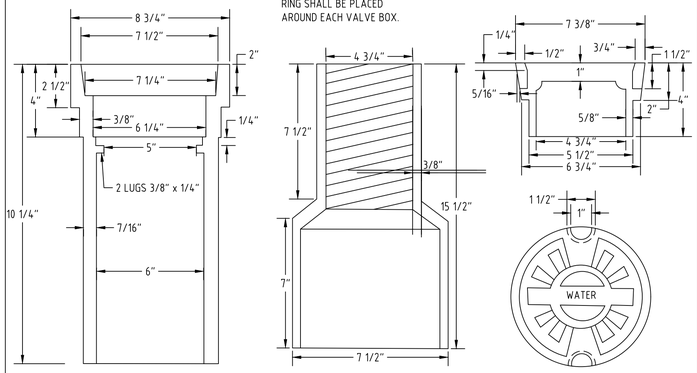

TOP

BOTTOM
(SCREW TYPE)

COVER

UNION COUNTY PUBLIC WORKS DEPARTMENT UNION COUNTY, N.C.	STANDARD DETAIL VALVE BOX	SCALE: N.T.S. DATE: 11-17-06	1

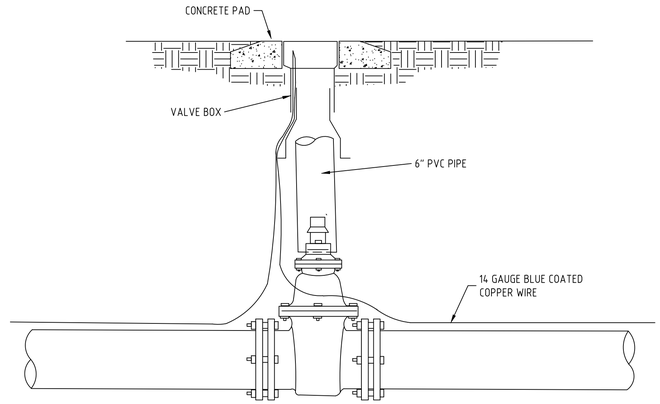

UNION COUNTY PUBLIC WORKS DEPARTMENT UNION COUNTY, N.C.	STANDARD DETAIL VALVE BOX INSTALLATION	SCALE: N.T.S. DATE: 10-4-11	1A

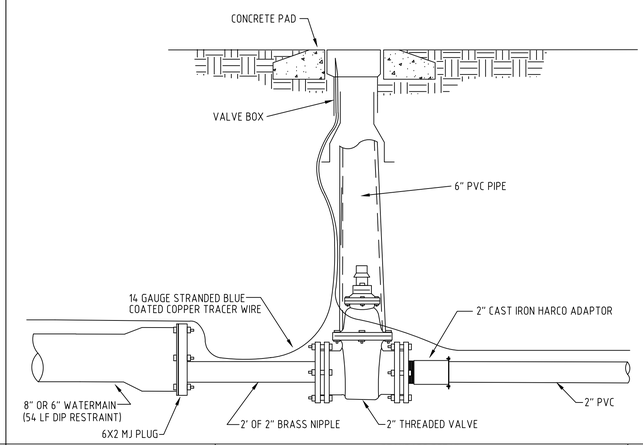

UNION COUNTY PUBLIC WORKS DEPARTMENT UNION COUNTY, N.C.	STANDARD DETAIL 8" OR 6"X2" REDUCER	SCALE: N.T.S. DATE: 10-4-11	7

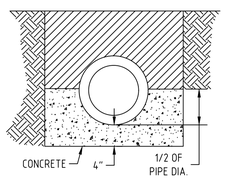

CLASS A

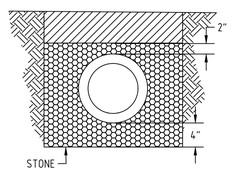

CLASS B

NOTES:
ALL CONCRETE = 3000 PSI
ALL STONE = N.C.D.O.T. NO. 67

UNION COUNTY PUBLIC WORKS DEPARTMENT UNION COUNTY, N.C.	STANDARD DETAIL PIPE BEDDING	SCALE: N.T.S. DATE: 11-17-06	8

GRAVITY SEWER - BEDDING DETAIL

NOTES:

FOR PVC -- USE SDR 35 FOR 10 FT. OR LESS.
USE SDR 26 FOR 10 FT. OR MORE.

USE DUCTILE IRON - IF UNDER 3 FT. DEEP OR OVER 18 FT. DEEP.

✱ NO STONES LARGER THAN # 67 STONE SHALL BE USED IN SELECT BACKFILL

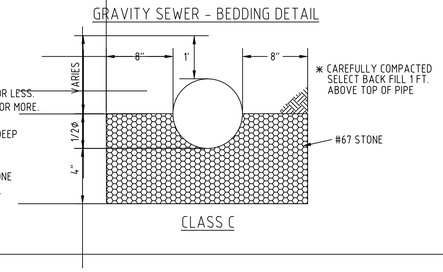

CLASS C

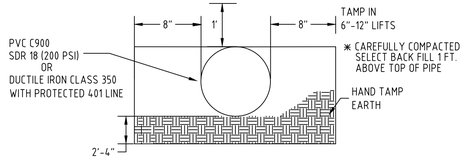

FORCE MAIN

UNION COUNTY PUBLIC WORKS DEPARTMENT UNION COUNTY, N.C.	STANDARD DETAIL SEWER BEDDING	SCALE: N.T.S. DATE: 12-16-13	8A

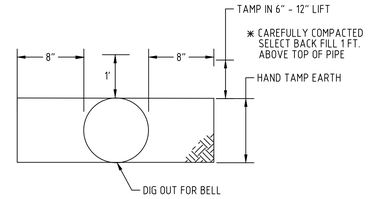

NOTES:
MINIMUM COVER IS 36"
2" PVC SDR 21 (200 PSI)
6"-8" PVC SDR 18
12" OR LARGER DIP

✱ NO STONES LARGER THAN # 67 STONE SHALL BE USED IN SELECT BACKFILL

UNION COUNTY PUBLIC WORKS DEPARTMENT UNION COUNTY, N.C.	STANDARD DETAIL WATER TRENCH	SCALE: N.T.S. DATE: 1-14-10	8B

NOTES:

1. THE CLEAN-OUT SHALL BE ADJUSTED TO GRADE AND THE POST REMOVED BY THE PLUMBER UPON CONNECTION TO THE TAP.
2. PLUMBER SHALL HAVE THE OPTION TO INSTALL A ONE PIECE 4" SCH. 40 COMBINATION WYE TO MINIMIZE TRENCH DEPTH OR INSTALL THE SEWER SERVICE LATERAL FROM THE 4" STUB OUT.
3. ALL CONSTRUCTION BY THE PLUMBER, EITHER OPTION 1 OR OPTION 2, SHALL BE INSPECTED AND APPROVED BY UNION COUNTY PLUMBING INSPECTOR UNDER A VALID PLUMBING PERMIT.
4. CONTRACTOR OR UNION COUNTY PUBLIC WORKS PERSONNEL MAY ADJUST SERVICE LATERAL ELEVATION WITH FITTINGS IF ADEQUATE GRADE EXISTS.
5. LATERAL CONNECTIONS TO MANHOLES MUST BE CORED AND BOOT INSTALLED.

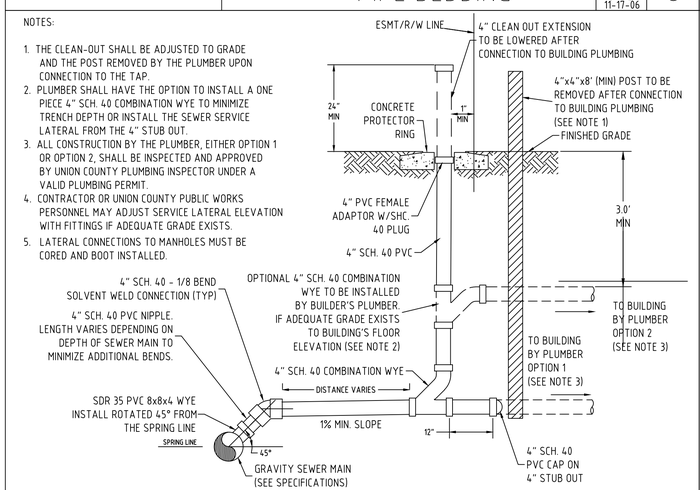

UNION COUNTY PUBLIC WORKS DEPARTMENT UNION COUNTY, N.C.	STANDARD DETAIL SEWER LATERAL	SCALE: N.T.S. DATE: 2-19-14	11

NOTE:
FOR CONCRETE PAVEMENT SUBSTITUTE 3500 PSI CONCRETE TO MATCH EXISTING THICKNESS FOR I-2 ASPHALT 4" ABC STONE FOR H BASE.

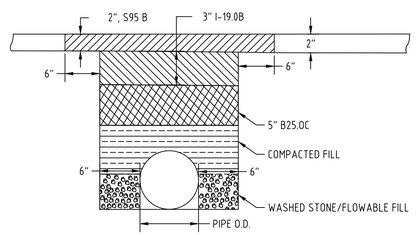

UNION COUNTY PUBLIC WORKS DEPARTMENT UNION COUNTY, N.C.	STANDARD DETAIL PAVEMENT REPLACEMENT	SCALE: N.T.S. DATE: 11-7-14	15

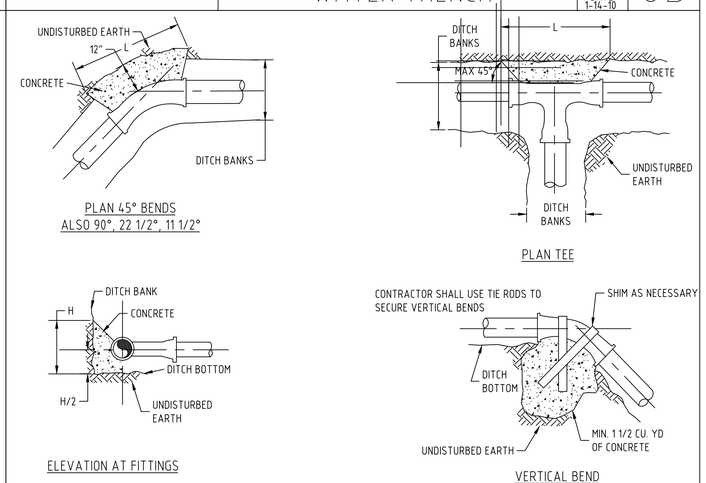

UNION COUNTY PUBLIC WORKS DEPARTMENT UNION COUNTY, N.C.	STANDARD DETAIL THRUST BLOCK	SCALE: N.T.S. DATE: 11-17-06	16

EAGLE ENGINEERING
FIRM LICENSE # C-0873
2013A Van Buren Avenue
Indian Trail, NC 28079
(704) 882-4222
P.O. BOX 551
Alpharetta, GA 30009
(678) 339-0640
www.eagleonline.net

NO.	DATE	BY	ISSUE
1	4-9-18	KEW	1st PLANCHECK REVISIONS PER TOWN & NCDOT
2	6-12-18	KEW	2nd PLANCHECK REVISIONS PER TOWN & NCDOT
3	8-1-18	KEW	3rd PLANCHECK REVISIONS PER TOWN & NCDOT

CARRINGTON SQUARE
TOWN OF WAXHAW, UNION COUNTY, NC
FOR THE BENEFIT OF:
TRIBEK PROPERTIES
2820 SELWYN AVENUE #425
CHARLOTTE, NC 28209

SITE DETAILS - WATER AND SEWER

DESIGNED BY	DRAWN BY	CHECKED BY
KEW	KEW	JHR
Scale	DATE	JOB NUMBER
AS SHOWN	12-4-2017	5117

NORTH CAROLINA PROFESSIONAL ENGINEER SEAL 14009 JOHNNY HOUSTON ROSS
2-16-18

Sheet
C-6.1

ANCHORAGE SCHEDULE											
	11 1/4º BEND		22 1/2º BEND		45º BEND		90º BEND		TEE		TEST PRESSURE
PIPE SIZE	L	H	L	H	L	H	L	H	L	H	(P.S.I.)
6"	1'3"	1'0"	2'3"	1'0"	2'6"	1'6"	2'9"	1'6"	2'0"	1'6"	200
	1'6"	1'3"	2'3"	1'6"	3'0"	1'6"	4'0"	1'6"	3'0"	1'6"	300
8"	1'6"	1'6"	2'6"	1'9"	3'0"	2'0"	3'9"	2'0"	2'6"	2'0"	200
	2'0"	1'6"	3'0"	2'0"	3'9"	2'3"	4'6"	2'6"	3'6"	2'3"	300
12"	2'6"	1'9"	4'0"	2'3"	4'3"	3'0"	5'0"	3'3"	4'0"	3'0"	200
	3'6"	2'0"	5'3"	2'6"	6'0"	3'3"	7'0"	3'6"	5'0"	3'6"	300
14"	3'0"	1'0"	4'0"	3'0"	4'6"	3'9"	6'0"	3'9"	4'6"	3'6"	200
	4'0"	2'6"	5'3"	3'6"	6'0"	4'3"	6'6"	5'0"	5'0"	5'0"	300
16"	3'0"	2'9"	4'6"	3'6"	5'0"	4'6"	7'0"	4'3"	5'0"	4'0"	200
	4'0"	3'0"	6'3"	3'9"	6'5"	5'3"	8'0"	5'3"	7'6"	4'0"	300

THRUST BLOCK DIMENSIONS BASED ON SOIL BEARING CAPACITY OF 2000 P.S.F. AND A WATER TEST PRESSURE OF 150 P.S.I. SIZES OF THRUST BLOCKS MAY BE REVISED BY THE ENGINEER WHERE BEARING CAPACITY OF SOIL VARIES.

PROVIDE TAR PAPER JOINT BETWEEN CONCRETE THRUST BLOCK AND PORTION OF PIPE BEING ANCHORED.

ALL CONCRETE THRUST BLOCKS SHALL BE 2500 P.S.I. CONCRETE.

MAXIMUM VERTICAL DEFLECTION SHALL BE 22 1/2°.

JOINTS SHALL REMAIN FREE OF CONCRETE FOR INSPECTION, REPAIR OR REPLACEMENT OF JOINTS.

UNION COUNTY PUBLIC WORKS DEPARTMENT
UNION COUNTY, N.C.

STANDARD DETAIL
THRUST BLOCK SPECIFICATIONS
SCALE: N/A
DATE: 11-17-06
17

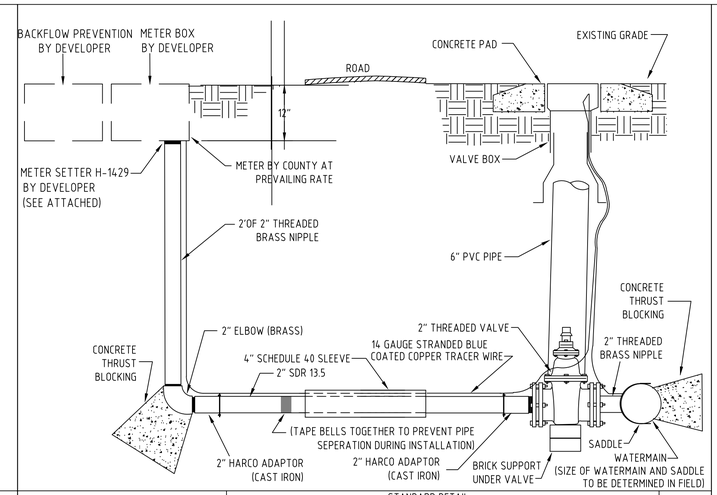

UNION COUNTY PUBLIC WORKS DEPARTMENT
UNION COUNTY, N.C.

STANDARD DETAIL
2" LONGSIDE SERVICE FOR 1 1/2"OR 2" METERS
SCALE: N.T.S.
DATE: 5-22-13
20

NOTES:

1. THE CLEAN-OUT SHALL BE ADJUSTED TO GRADE AND THE POST REMOVED BY THE PLUMBER UPON CONNECTION TO THE TAP.
2. PLUMBER SHALL HAVE THE OPTION TO INSTALL A ONE PIECE 4" SCH. 40 COMBINATION WYE TO MINIMIZE TRENCH DEPTH OR INSTALL THE SEWER SERVICE LATERAL FROM THE 4" STUB OUT.
3. ALL CONSTRUCTION BY THE PLUMBER, EITHER OPTION 1 OR OPTION 2, SHALL BE INSPECTED AND APPROVED BY UNION COUNTY PLUMBING INSPECTOR UNDER A VALID PLUMBING PERMIT.
4. CONTRACTOR OR UNION COUNTY PUBLIC WORKS PERSONNEL MAY ADJUST SERVICE LATERAL ELEVATION WITH FITTINGS IF ADEQUATE GRADE EXISTS.
5. LATERAL CONNECTIONS TO MANHOLES MUST BE CORED AND BOOT INSTALLED.

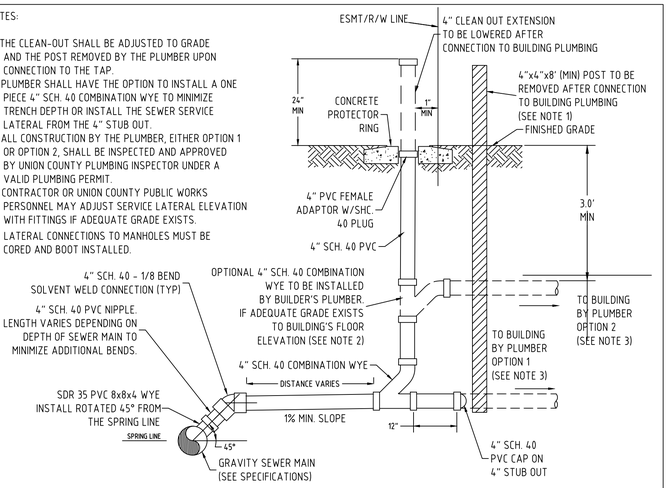

UNION COUNTY PUBLIC WORKS DEPARTMENT
UNION COUNTY, N.C.

STANDARD DETAIL
SEWER LATERAL
SCALE: N.T.S.
DATE: 2-19-14
11

NOTE:
FOR CONCRETE PAVEMENT SUBSTITUTE 3500 PSI CONCRETE TO MATCH EXISTING THICKNESS FOR I-2 ASPHALT 4" ABC STONE FOR H BASE.

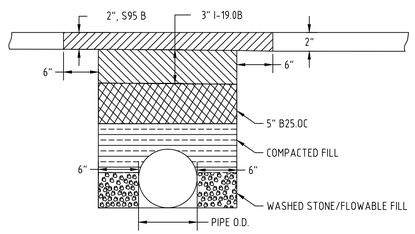

UNION COUNTY PUBLIC WORKS DEPARTMENT
UNION COUNTY, N.C.

STANDARD DETAIL
PAVEMENT REPLACEMENT
SCALE: N.T.S.
DATE: 11-7-14
15

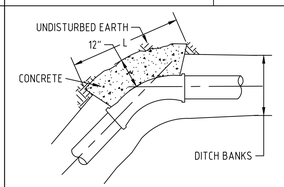

PLAN 45° BENDS
ALSO 90°, 22 1/2°, 11 1/2°

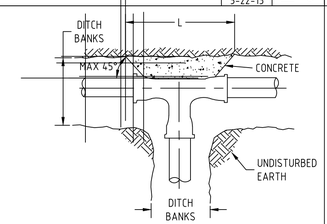

PLAN TEE

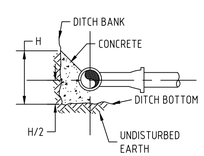

ELEVATION AT FITTINGS

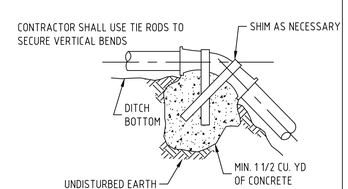

VERTICAL BEND

UNION COUNTY PUBLIC WORKS DEPARTMENT
UNION COUNTY, N.C.

STANDARD DETAIL
THRUST BLOCK
SCALE: N.T.S.
DATE: 11-17-06
16

EAGLE ENGINEERING
FIRM LICENSE # C-0873
2013A Van Buren Avenue
Indian Trail, NC 28079
P.O. BOX 551
Alpharetta, GA 30009
(678) 339-0640
(704) 882-4222
www.eagleonline.net

NO.	DATE	BY	ISSUE
1	4-9-18	KEW	1st PLANCHECK REVISIONS PER TOWN & NCDOT
2	6-12-18	KEW	2nd PLANCHECK REVISIONS PER TOWN & NCDOT
3	8-1-18	KEW	3rd PLANCHECK REVISIONS PER TOWN & NCDOT

CARRINGTON SQUARE
TOWN OF WAXHAW, UNION COUNTY, NC
FOR THE BENEFIT OF:
TRIBEK PROPERTIES
2820 SELWYN AVENUE #425
CHARLOTTE, NC 28209

SITE DETAILS - WATER AND SEWER

DESIGNED BY	KEW	DRAWN BY	KEW	CHECKED BY	JHR
Scale	AS SHOWN	DATE	12-4-2017	JOB NUMBER	5117

NORTH CAROLINA PROFESSIONAL SEAL 14959 ENGINEER JUNIUS HOUSTON ROSS
2-16-18

Sheet
C-6.2

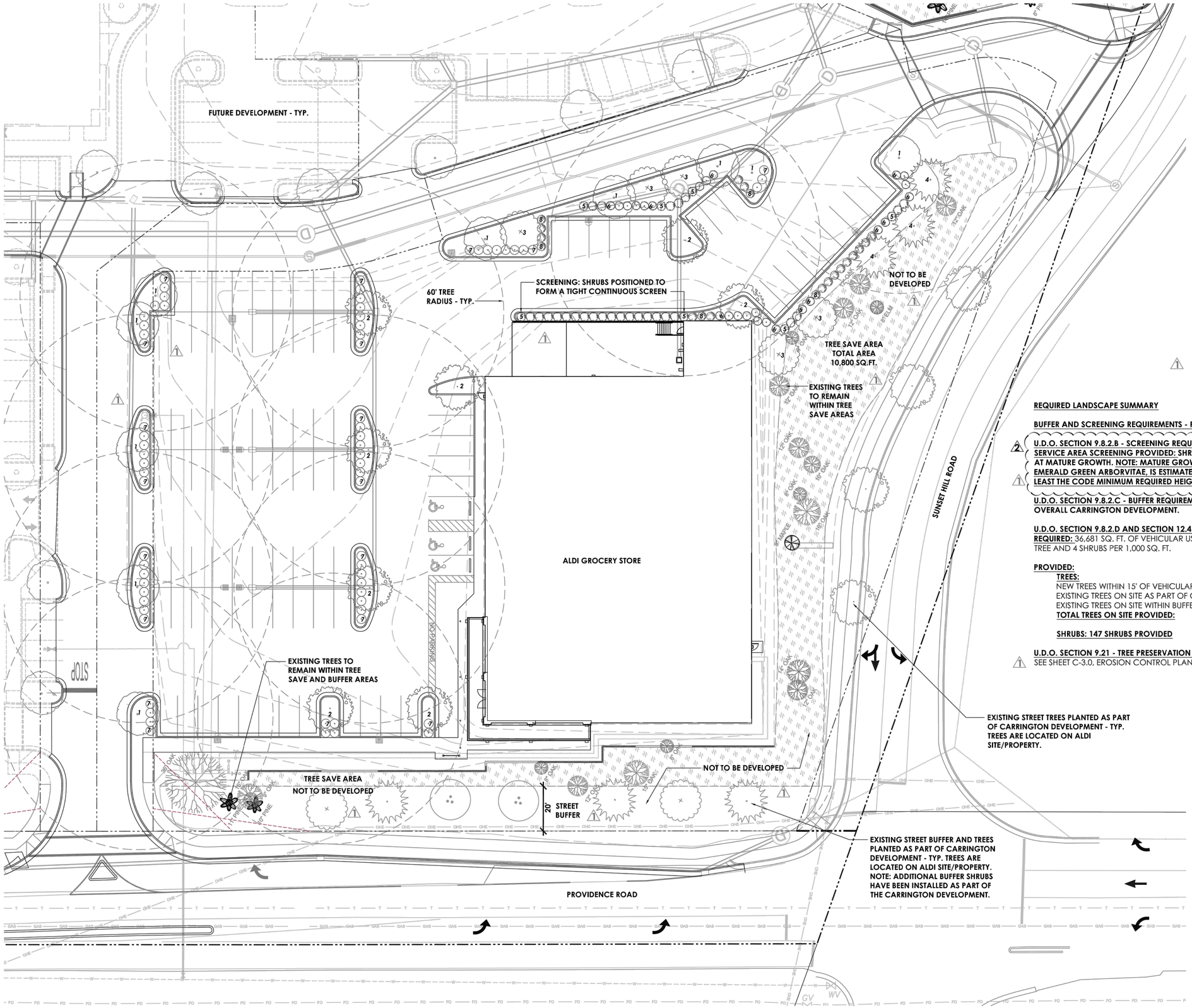

SCALE 1"=20'-0"

TOWN NOTES (SEE ADDITIONAL NOTES SHEET L1.2): LANDSCAPE MAINTENANCE PLAN

"THE OWNERS OF THE PROPERTY AND THEIR AGENTS, HEIRS, OR ASSIGNS SHALL BE RESPONSIBLE FOR THE INSTALLATION, PRESERVATION, AND MAINTENANCE OF ALL PLANTING AND PHYSICAL FEATURES SHOWN ON THIS PLAN. THE OWNERS SHALL BE RESPONSIBLE FOR MAINTENANCE OF THE VEGETATION, INCLUDING BUT NOT LIMITED TO:

1. *FERTILIZATION*
2. *PRUNING*
3. *PEST CONTROL*
4. *MULCHING*
5. *MOWING (IF ANY)*
6. *PROTECTION OF THE ROOT ZONES FROM EQUIPMENT, CONSTRUCTION AND STORAGE OF MATERIALS*
7. *WATERING*
8. *OTHER CONTINUING MAINTENANCE OPERATIONS*

FAILURE TO MAINTAIN ALL PLANTINGS IN ACCORDANCE WITH THIS PLAN SHALL CONSTITUTE A VIOLATION OF THE UDO AND MAY RESULT IN FINES."

NOTE: THE BUSINESS OWNERS ASSOCIATION PROPERTY MANAGEMENT COMPANY WILL BE RESPONSIBLE FOR MAINTAINING ALL LANDSCAPING INCLUDING STREET BUFFER AND TREE SAVE AREAS.

REQUIRED LANDSCAPE SUMMARY

BUFFER AND SCREENING REQUIREMENTS - PER SECTION 9.8 OF TOWN OF WAXHAW U.D.O.

2 **U.D.O. SECTION 9.8.2.B - SCREENING REQUIREMENTS FOR SERVICE AREAS**
SERVICE AREA SCREENING PROVIDED: SHRUBS POSITIONED TO FORM A CONTINUOUS TIGHT SCREEN AT MATURE GROWTH. NOTE: MATURE GROWTH FOR PROPOSED SERVICE AREA SCREENING SHRUB, EMERALD GREEN ARBORVITAE, IS ESTIMATED AT 14'-15' IN HEIGHT BY 4' WIDE, AND WILL ACHIEVE AT LEAST THE CODE MINIMUM REQUIRED HEIGHT OF 5'-6' AT MATURITY.

U.D.O. SECTION 9.8.2.C - BUFFER REQUIREMENTS: BUFFERS HAVE BEEN PROVIDED AS PART OF THE OVERALL CARRINGTON DEVELOPMENT.

U.D.O. SECTION 9.8.2.D AND SECTION 12.4.2 - PARKING LOT LANDSCAPING:
REQUIRED: 36,681 SQ. FT. OF VEHICULAR USE AREA (VUA) PROPOSED = 37 TREES, 147 SHRUBS @ 1 TREE AND 4 SHRUBS PER 1,000 SQ. FT.

PROVIDED:

TREES:

NEW TREES WITHIN 15' OF VEHICULAR USE AREA =	26
EXISTING TREES ON SITE AS PART OF CARRINGTON PLANTINGS =	11
EXISTING TREES ON SITE WITHIN BUFFERS/TREE SAVE AREAS =	22
TOTAL TREES ON SITE PROVIDED:	**59**

SHRUBS: 147 SHRUBS PROVIDED

U.D.O. SECTION 9.21 - TREE PRESERVATION PROTECTION:
SEE SHEET C-3.0, EROSION CONTROL PLAN FOR TREE PROTECTION MEASURES.

ENGINEERING
FIRM LICENSE # C-0873
2013A Van Buren Avenue
Indian Trail, NC 28079
(704) 882-4222
P.O. BOX 551
Alpharetta, GA 30009
(678) 339-0640
www.engineline.net

NO.	DATE	BY	ISSUE
1	02/28/2018	GRF	TOWN, ENGINEERING, & KIMLEY HORN COMMENTS
2	08/08/2018	GRF	TOWN STAFF COMMENTS

ALDI GROCERY STORE #06

TOWN OF WAXHAW, UNION COUNTY, NC

FOR THE BENEFIT OF:

ALDI, INC. - SALISBURY DIVISION
1985 OLD UNION CHURCH ROAD
SALISBURY, NC 28146

PLANTING PLAN

DESIGNED BY	DRAWN BY	CHECKED BY
GRF	GRF	GRF
Scale: AS SHOWN	DATE: 12-27-2017	JOB NUMBER: 6067

VIZ, PLLC
Urban Design + Land Planning + Landscape Architecture
PO Box 704
Cornelius, NC 28031
(704) 997-6144
gary@viz.design

NORTH CAROLINA LANDSCAPE ARCHITECTURAL CORPORATION C-415 VIZ, PLLC

NORTH CAROLINA REGISTERED LANDSCAPE ARCHITECT No. 707 GARY R. FANKHAUSER

Sheet

L-1.1

PLANTING SPECIFICATIONS

1. PLANT MATERIAL

A. FURNISH NURSERY-GROWN PLANTS INDICATED IN PLANT LEGEND SHOWN ON DRAWINGS AND COMPLYING WITH ANSI Z60.1 - 2014, *AMERICAN STANDARD FOR NURSERY STOCK*.

B. ANNUALS: PROVIDE HEALTHY, DISEASE-FREE PLANTS OF SPECIES AND VARIETY SHOWN OR LISTED, WITH WELL-ESTABLISHED ROOT SYSTEMS. PROVIDE ONLY PLANTS THAT ARE ACCLIMATED TO OUTDOOR CONDITIONS BEFORE DELIVERY.

C. CONTRACTOR SHALL PROVIDE A ONE YEAR WARRANTY FROM FINAL ACCEPTANCE ON ALL PLANTS UNLESS APPROVED OTHERWISE BY THE OWNER.

2. SOIL AMENDMENTS AS REQUIRED FROM SOILS REPORT/TESTING

A. LIME: ASTM C 602, AGRICULTURAL LIMING MATERIAL CONTAINING A MINIMUM OF 80 PERCENT CALCIUM CARBONATE EQUIVALENT.

B. SULFUR: GRANULAR, BIODEGRADABLE, AND CONTAINING A MINIMUM OF 90 PERCENT SULFUR.

C. IRON SULFATE: GRANULATED FERROUS SULFATE CONTAINING A MINIMUM OF 20 PERCENT IRON AND 10 PERCENT SULFUR.

D. ALUMINUM SULFATE: COMMERCIAL GRADE, UNADULTERATED.

E. PERLITE: HORTICULTURAL PERLITE, SOIL AMENDMENT GRADE.

F. AGRICULTURAL GYPSUM: MINIMUM 90 PERCENT CALCIUM SULFATE.

G. SAND: CLEAN, WASHED, NATURAL OR MANUFACTURED, AND FREE OF TOXIC MATERIALS.

H. COMPOST: WELL-COMPOSTED, STABLE, AND WEED-FREE ORGANIC MATTER, PH RANGE OF 5.5 TO 8; MOISTURE CONTENT 35 TO 55 PERCENT BY WEIGHT; 100 PERCENT PASSING THROUGH 3/4-INCH SIEVE.

I. SPHAGNUM PEAT: PARTIALLY DECOMPOSED SPHAGNUM PEAT MOSS, FINELY DIVIDED OR GRANULAR TEXTURE, WITH A PH RANGE OF 3.4 TO 4.8.

J. MANURE: WELL-ROTTED, UNLEACHED, STABLE OR CATTLE MANURE CONTAINING NOT MORE THAN 25 PERCENT BY VOLUME OF STRAW, SAWDUST, OR OTHER BEDDING MATERIALS; FREE OF TOXIC SUBSTANCES, STONES, STICKS, SOIL, WEED SEED, DEBRIS, AND MATERIAL HARMFUL TO PLANT GROWTH.

3. FERTILIZERS

A. BONEMEAL: COMMERCIAL, RAW OR STEAMED, FINELY GROUND; A MINIMUM OF 1 PERCENT NITROGEN AND 10 PERCENT PHOSPHORIC ACID.

B. SUPERPHOSPHATE: COMMERCIAL, PHOSPHATE MIXTURE, SOLUBLE; A MINIMUM OF 20 PERCENT AVAILABLE PHOSPHORIC ACID.

C. COMMERCIAL FERTILIZER: COMMERCIAL-GRADE COMPLETE FERTILIZER OF NEUTRAL CHARACTER, CONSISTING OF FAST- AND SLOW-RELEASE NITROGEN.

D. SLOW-RELEASE FERTILIZER: GRANULAR OR PELLETED FERTILIZER.

4. PLANTING MIX

A. PLANTING MIX: SHALL BE NATURAL, FERTILE, AGRICULTURAL TOPSOIL, CAPABLE OF SUSTAINING VIGOROUS PLANT GROWTH, WITH PH RANGE OF 5.5 TO 7. IT MAY BE DEVELOPED BY AMENDING THE EXISTING SOIL, OR REMOVING THE EXISTING SOIL AND REPLACING WITH NEW SOIL. IT SHALL BE FREE OF ROOTS, PLANTS, SOD, STONES, CLODS, CLAY LUMPS, POCKETS OF COARSE SAND, CONCRETE SLURRY, CONCRETE LAYERS OR CHUNKS, CEMENT, PLASTER, BUILDING DEBRIS, AND OTHER EXTRANEOUS MATERIALS HARMFUL TO PLANT GROWTH. PLANTING MIX SHALL NOT BE USED WHILE IN A FROZEN OR MUDDY CONDITION. UNLESS OTHERWISE SPECIFIED, THE PLANTING MIX SHALL CONTAIN THE FOLLOWING PERCENTAGES:

- CLAY: MIN. 10% - MAX. 30% (RED CLAY WELL PULVERIZED); CLAY SHALL BE STERILE.
- SILT: MIN. 30% - MAX. 50%
- COARSE SAND: MIN. 30% - MAX. 45% (1.0mm TO 0.5mm DIA., AND FREE OF ROCK)
- ORGANIC MAT.: MIN. 5% (COMPOST/HUMUS SUCH AS SAWDUST OR LEAF MOLD THAT IS DECOMPOSED)
- ELEMENTS: CALCIUM 55% - 80%; MAGNESIUM 10% - 30%; POTASSIUM 5% - 8%

B. CONTRACTOR TO PROVIDE SOILS TEST/ANALYSIS INDICATING ABOVE REQUIREMENTS.

5. MULCHES

A. PINE STRAW MULCH FOR ALL PLANT BEDS UNLESS OTHERWISE INDICATED.

B. ALL PLANT BEDS AND TREE RINGS SHALL BE MULCHED.

6. PLANT BED ESTABLISHMENT

A. LAYOUT PLANT BEDS AS INDICATED ON THE PLANTING PLAN AND REMOVE UNNECESSARY MATERIAL TO A MINIMUM DEPTH OF 18 INCHES.

B. LOOSEN SUBGRADE OF PLANTING BEDS TO A MINIMUM DEPTH OF 6 INCHES. REMOVE STONES LARGER THAN 1 INCH IN ANY DIMENSION AND STICKS, ROOTS, RUBBISH, AND OTHER EXTRANEOUS MATTER AND LEGALLY DISPOSE OF THEM OFF OWNER'S PROPERTY.

C. SPREAD PLANTING MIX (SEE 4 ABOVE) TO A DEPTH OF 18 INCHES BUT NOT LESS THAN REQUIRED TO MEET FINISH GRADES AFTER NATURAL SETTLEMENT. DO NOT SPREAD IF PLANTING MIX OR SUBGRADE IS FROZEN, MUDDY, OR EXCESSIVELY WET.

D. FINISH GRADING: GRADE PLANTING BEDS TO A SMOOTH, UNIFORM SURFACE PLANE WITH LOOSE, UNIFORMLY FINE TEXTURE. ROLL AND RAKE, REMOVE RIDGES, AND FILL DEPRESSIONS TO MEET FINISH GRADES.

7. EXCAVATION FOR TREES AND SHRUBS

A. PLANTING PITS AND TRENCHES: EXCAVATE CIRCULAR PLANTING PITS WITH SIDES SLOPING INWARD AT A 45-DEGREE ANGLE. EXCAVATIONS WITH VERTICAL SIDES ARE NOT ACCEPTABLE. TRIM PERIMETER OF BOTTOM LEAVING CENTER AREA OF BOTTOM RAISED SLIGHTLY TO SUPPORT ROOT BALL AND ASSIST IN DRAINAGE AWAY FROM CENTER. DO NOT FURTHER DISTURB BASE. ENSURE THAT ROOT BALL WILL SIT ON UNDISTURBED BASE SOIL TO PREVENT SETTLING. SCARIFY SIDES OF PLANTING PIT SMEARED OR SMOOTHED DURING EXCAVATION.

B. EXCAVATE APPROXIMATELY THREE TIMES AS WIDE AS BALL DIAMETER.

C. DO NOT EXCAVATE DEEPER THAN DEPTH OF THE ROOT BALL, MEASURED FROM THE ROOT FLARE TO THE BOTTOM OF THE ROOT BALL.

D. SUBSOIL AND TOPSOIL REMOVED FROM EXCAVATIONS MAY NOT BE USED SOLELY AS PLANTING MIX (SEE NOTE 4 ABOVE).

8. TREE, SHRUB, AND VINE PLANTING

A. BEFORE PLANTING, VERIFY THAT ROOT FLARE IS VISIBLE AT TOP OF ROOT BALL ACCORDING TO ANSI Z60.1.

B. REMOVE STEM GIRDLING ROOTS AND KINKED ROOTS. REMOVE INJURED ROOTS BY CUTTING CLEANLY; DO NOT BREAK.

C. SET STOCK PLUMB AND IN CENTER OF PLANTING PIT OR TRENCH WITH ROOT FLARE 1 INCH ABOVE ADJACENT FINISH GRADES.

D. USE PLANTING SOIL FOR BACKFILL.

E. BALLED AND BURLAPPED: AFTER PLACING SOME BACKFILL AROUND ROOT BALL TO STABILIZE PLANT, CAREFULLY CUT AND REMOVE BURLAP, ROPE, AND WIRE BASKETS FROM TOPS OF ROOT BALLS AND FROM SIDES, BUT DO NOT REMOVE FROM UNDER ROOT BALLS. REMOVE PALLETS, IF ANY, BEFORE SETTING. DO NOT USE PLANTING STOCK IF ROOT BALL IS CRACKED OR BROKEN BEFORE OR DURING PLANTING OPERATION.

F. CONTAINER-GROWN: CAREFULLY REMOVE ROOT BALL FROM CONTAINER WITHOUT DAMAGING ROOT BALL OR PLANT.

G. BACKFILL AROUND ROOT BALL IN LAYERS, TAMPING TO SETTLE SOIL AND ELIMINATE VOIDS AND AIR POCKETS. WHEN PLANTING PIT IS APPROXIMATELY ONE-HALF FILLED, WATER THOROUGHLY BEFORE PLACING REMAINDER OF BACKFILL. REPEAT WATERING UNTIL NO MORE WATER IS ABSORBED.

H. CONTINUE BACKFILLING PROCESS. WATER AGAIN AFTER PLACING AND TAMPING FINAL LAYER OF SOIL.

I. WHEN PLANTING ON SLOPES, SET THE PLANT SO THE ROOT FLARE ON THE UPHILL SIDE IS FLUSH WITH THE SURROUNDING SOIL ON THE SLOPE; THE EDGE OF THE ROOT BALL ON THE DOWNHILL SIDE WILL BE ABOVE THE SURROUNDING SOIL. APPLY ENOUGH SOIL TO COVER THE DOWNHILL SIDE OF THE ROOT BALL.

J. PRUNE/REMOVE ONLY DEAD, DYING, OR BROKEN BRANCHES. DO NOT PRUNE FOR SHAPE. PRUNE TO RETAIN NATURAL CHARACTER.

K. PRUNE, THIN, AND SHAPE TREES, SHRUBS, AND VINES ACCORDING TO STANDARD PROFESSIONAL HORTICULTURAL AND ARBORICULTURAL PRACTICES FOR NEWLY PLANTED PLANTS. UNLESS OTHERWISE INDICATED BY LANDSCAPE ARCHITECT, DO NOT CUT TREE LEADERS.

9. GROUND COVER, PERENNIAL, AND ANNUAL PLANTING

A. SET OUT AND SPACE GROUND COVER, PERENNIALS, AND/OR ANNUALS AS INDICATED IN EVEN ROWS WITH TRIANGULAR SPACING.

B. USE PLANTING MIX FOR BACKFILL.

C. DIG HOLES LARGE ENOUGH TO ALLOW SPREADING OF ROOTS.

D. WORK SOIL AROUND ROOTS TO ELIMINATE AIR POCKETS AND LEAVE A SLIGHT SAUCER INDENTATION AROUND PLANTS TO HOLD WATER.

E. WATER THOROUGHLY AFTER PLANTING, TAKING CARE NOT TO COVER PLANT CROWNS WITH WET SOIL.

F. PROTECT PLANTS FROM HOT SUN AND WIND; REMOVE PROTECTION IF PLANTS SHOW EVIDENCE OF RECOVERY FROM TRANSPLANTING SHOCK.

10. PLANT AND PLANT BED MULCHING

A. MULCH BACKFILLED SURFACES OF PLANTING BEDS AND OTHER AREAS INDICATED.

B. TREES AND TREE-FORM SHRUBS IN TURF AREAS: APPLY ORGANIC MULCH RING OF 3-INCH AVERAGE THICKNESS, WITH MINIMUM 36-INCH RADIUS AROUND TRUNKS OR STEMS. DO NOT PLACE MULCH WITHIN 3 INCHES OF TRUNKS OR STEMS.

C. ORGANIC MULCH IN PLANT BEDS: APPLY 3-INCH AVERAGE THICKNESS OF MULCH OVER ENTIRE SURFACE OF PLANT BED, AND FINISH LEVEL WITH ADJACENT FINISH GRADES. DO NOT PLACE MULCH WITHIN 2 INCHES OF TRUNKS OR STEMS.

11. PLANT MAINTENANCE

A. MAINTAIN PLANTINGS BY PRUNING, CULTIVATING, WATERING, WEEDING, FERTILIZING, MULCHING, RESTORING PLANTING SAUCERS, RESETTING TO PROPER GRADES OR VERTICAL POSITION, AND PERFORMING OTHER OPERATIONS AS REQUIRED TO ESTABLISH HEALTHY, VIABLE PLANTINGS. SPRAY OR TREAT AS REQUIRED TO KEEP TREES AND SHRUBS FREE OF INSECTS AND DISEASE.

B. SET IRRIGATION SYSTEM FOR ZONE DURATION APPLICABLE FOR NEWLY PLANTED PLANTS IF APPLICABLE.

C. FILL IN AS NECESSARY SOIL SUBSIDENCE THAT MAY OCCUR BECAUSE OF SETTLING OR OTHER PROCESSES. REPLACE MULCH MATERIALS DAMAGED OR LOST IN AREAS OF SUBSIDENCE.

D. APPLY TREATMENTS AS REQUIRED TO KEEP PLANT MATERIALS, PLANTED AREAS, AND SOILS FREE OF PESTS AND PATHOGENS OR DISEASE. USE PRACTICES TO MINIMIZE THE USE OF PESTICIDES AND REDUCE HAZARDS.

E. APPLY PESTICIDES AND OTHER CHEMICAL PRODUCTS AND BIOLOGICAL CONTROL AGENTS IN ACCORDANCE WITH AUTHORITIES HAVING JURISDICTION AND MANUFACTURER'S WRITTEN RECOMMENDATIONS. COORDINATE APPLICATIONS WITH OWNER'S OPERATIONS AND OTHERS IN PROXIMITY TO THE WORK. NOTIFY OWNER BEFORE EACH APPLICATION IS PERFORMED.

F. PROTECT PLANTS FROM DAMAGE DUE TO LANDSCAPE OPERATIONS AND OPERATIONS OF OTHER CONTRACTORS AND TRADES. MAINTAIN PROTECTION DURING INSTALLATION AND MAINTENANCE PERIODS. TREAT, REPAIR, OR REPLACE DAMAGED PLANTINGS.

NOTES:

1. SEE SHEET L-1.1 FOR DETAILED PLANT SPECIES AND LOCATIONS.
2. CONTRACTOR TO VERIFY PLANT TOTALS. IF THERE IS A CONFLICT IN PLANT TOTALS BETWEEN QUANTITIES SHOWN IN THE PLANT LEGEND AND THOSE INDICTED ON THE PLANS, THE PLANT LEGEND QUANTITIES AND SUMMARY QUANTITIES SHALL TAKE PRECEDENCE.
3. PLANTS SHALL ONLY BE PLANTED FROM OCTOBER 1 - MAY 15 UNLESS ALTERNATIVE DATES ARE ALLOWED.
4. SEE CIVIL ENGINEERING DRAWINGS FOR LOCATIONS OF SITE DEVELOPMENT ELEMENTS, UTILITIES, TREE PRESERVATION AREAS, BUFFER YARDS, AND/OR OTHER REQUIRED AREAS AND EASEMENTS.
5. THE CONTRACTOR SHALL VERIFY LOCATION AND ELEVATION OF ALL UNDERGROUND UTILITIES. THE LOCATION OF ALL EXISTING UTILITIES ARE NOT NECESSARILY SHOWN ON THE PLANS, AND WHERE SHOWN ARE APPROXIMATE. THE CONTRACTOR SHALL ON HIS OWN INITIATIVE AND AT NO ADDITIONAL COST TO THE OWNER, HAVE LOCATED ALL UNDERGROUND LINES AND STRUCTURES. NO CLAIMS FOR DAMAGES OR EXTRA COMPENSATION SHALL ACCRUE TO THE CONTRACTOR FROM THE PRESENCE OF SUCH PIPE, OTHER OBSTRUCTIONS, OR FROM ANY DELAY DUE TO REMOVAL OR REARRANGEMENT OF SAME. THE CONTRACTOR SHALL BE RESPONSIBLE FOR ANY DAMAGES TO UNDERGROUND STRUCTURES. THE CONTRACTOR IS RESPONSIBLE FOR CONTACTING ALL NON-SUBSCRIBING UTILITIES. THE CONTRACTOR SHALL CONTACT ***NORTH CAROLINA ONE CALL*** AT ***811*** FOR ASSISTANCE IN LOCATING UTILITIES.
6. ALL DISTURBED AREAS THAT ARE NOT PLANT BEDS SHALL BE GRASS SEED.
7. THE LANDSCAPE CONTRACTOR SHALL PERFORM FINISH GRADING TO ENSURE A SMOOTH TRANSITION BETWEEN PLANT BEDS AND LAWN AREAS.
8. ALL PLANTING AND LANDSCAPE WORK SHALL BE IN ACCORDANCE WITH CURRENT TOWN STANDARDS.

IRRIGATION NOTES:

1. ALL LANDSCAPED AREAS, UNLESS OTHERWISE INDICATED BY THE OWNER, ARE TO BE IRRIGATED WITH COMPLETE HEAD TO HEAD COVERAGE.
2. CONTRACTOR TO PROVIDE SHOP DRAWINGS FOR IRRIGATION DESIGN FOR REVIEW AND APPROVAL BY ARCHITECT/OWNER.
3. A WATER CONSERVING SYSTEM IS MANDATORY.
4. A SEPARATE IRRIGATION METER IS REQUIRED FOR ALL IRRIGATION SYSTEMS.
5. UNLESS OTHERWISE INDICATED ON THE CIVIL ENGINEERING PLANS, THE METER AND MAIN IRRIGATION LINE SHALL BE 2".
6. CONTRACTOR TO COORDINATE IRRIGATION SLEEVE LOCATIONS WITH THE GENERAL CONTRACTOR/PROJECT MANAGER

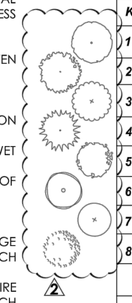

Plant Legend

KEY	BOTANICAL NAME	COMMON NAME	SIZE	SPACING	QUANTITY
1	Ulmus parvifolia 'Bosque'	Bosque Lacebark Elm	2" cal.	As Shown	11
2	Zelkova serratta 'Green Vase'	Green Vase Zelkova	2" cal.	As Shown	7
3	Quercus lyrata	Overcup Oak	2" cal.	As Shown	5
4	Cryptomeria japonica	Japanese Cryptomeria	2" cal.	As Shown	3
5	Thuja occidentalis 'Smaragd'	Emerald Green Arborvitae	36" height	5' o.c.	33
6	Loropetalum chinense 'Purple Diamond'	Purple Diamond Loropetalum	18" height	4' o.c.	25
7	Distylium 'Emerald Heights'	Emerald Heights Distylium	18" height	4' o.c.	69
8	Osmanthus heterophyllus 'Variegatus'	Variegated False Holly	18" height	4' o.c.	20

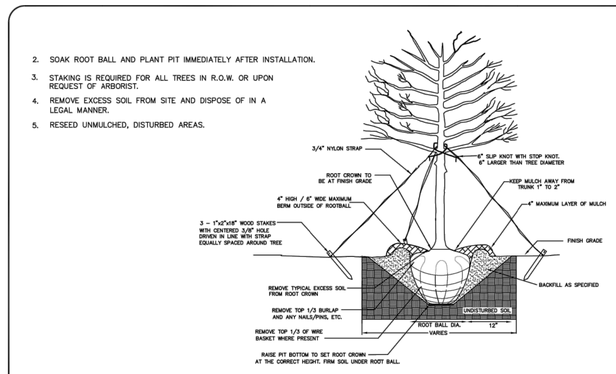

TREE PLANTING

(FOR SINGLE AND MULTI-STEM TREES)

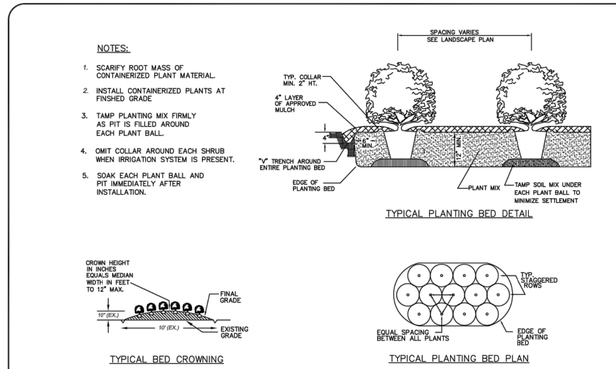

SHRUB PLANTING BED

VIZ, PLLC
Urban Design + Land Planning + Landscape Architecture
PO Box 704
Cornelius, NC 28031
(704) 997-6144
gary@viz.design

NORTH CAROLINA LANDSCAPE ARCHITECTURAL REGISTRATION BOARD C-415 VIZ, PLLC

North Carolina 811 www.nc811.org

ENGINEERING
FIRM LICENSE # C-0873
2013A Van Buren Avenue
Indian Trail, NC 28079
(704) 882-4222
P.O. BOX 551
Alpharetta, GA 30009
(678) 339-0640
www.englonline.net

NO.	DATE	BY	ISSUE
1	02/26/2018	GRF	TOWN, ENGINEERING, & KIMLEY HORN COMMENTS
2	08/06/2018	GRF	TOWN STAFF COMMENTS

ALDI GROCERY STORE #06
TOWN OF WAXHAW, UNION COUNTY, NC
FOR THE BENEFIT OF:
ALDI, INC. - SALISBURY DIVISION
1985 OLD UNION CHURCH ROAD
SALISBURY, NC 28146

PLANT LEGEND AND SPECIFICATIONS

DESIGNED BY	DRAWN BY	CHECKED BY
GRF	GRF	GRF
Scale	DATE	JOB NUMBER
AS SHOWN	12-27-2017	6067

NORTH CAROLINA REGISTERED LANDSCAPE ARCHITECT No. 707 GARY R. FANKHAUSER JR.

Sheet

L-1.2

Luminaire Schedule							
Symbol	Qty	Label	Arrangement	Lumens/Lamp	LLF	Total Watts	Description
	4	L21	SINGLE	3819	1.000	168	XSPW-A-0-3-30K-C-U-CS-P
	6	L23	SINGLE	N.A.	1.000	252	AL-42WLED-UD-CG-120-30K
	6	L31	SINGLE	11648	1.000	516	OSQ-A-NM-4ME-B-57K-UL-CS + OSQ-DACS DIRECT ARM
	2	L32b	BACK-BACK	11648	1.000	344	OSQ-A-NM-4ME-B-57K-UL-CS + OSQ-DACS DIRECT ARM

Footcandles calculated using predicted lumen values after 50K hours of operation					
Label	Avg	Max	Min	Avg/Min	Max/Min
PROPERTY LINE	0.41	1.8	0.0	N.A.	N.A.
PARKING	2.11	6.7	0.5	4.22	13.40

NATIONAL ACCOUNT PRICING, PLEASE CALL MIKE KREINER AT CREE LIGHTING:
224-250-1561 OR MIKE.KREINER@CREE.COM

Additional Required Equipment:
(6) - CL-SSP-4011-25-D1-PS - (25' x 4" Steel Square Pole 11ga, Single)
(2) - CL-SSP-4011-25-D2-PS - (25' x 4" Steel Square Pole 11ga, 2@180°)

Proposed Poles Meets 100MPH Sustained Winds.

ADDITIONAL EQUIPMENT
(10) OSQ-DAXX (DIRECT ARM MOUNT)

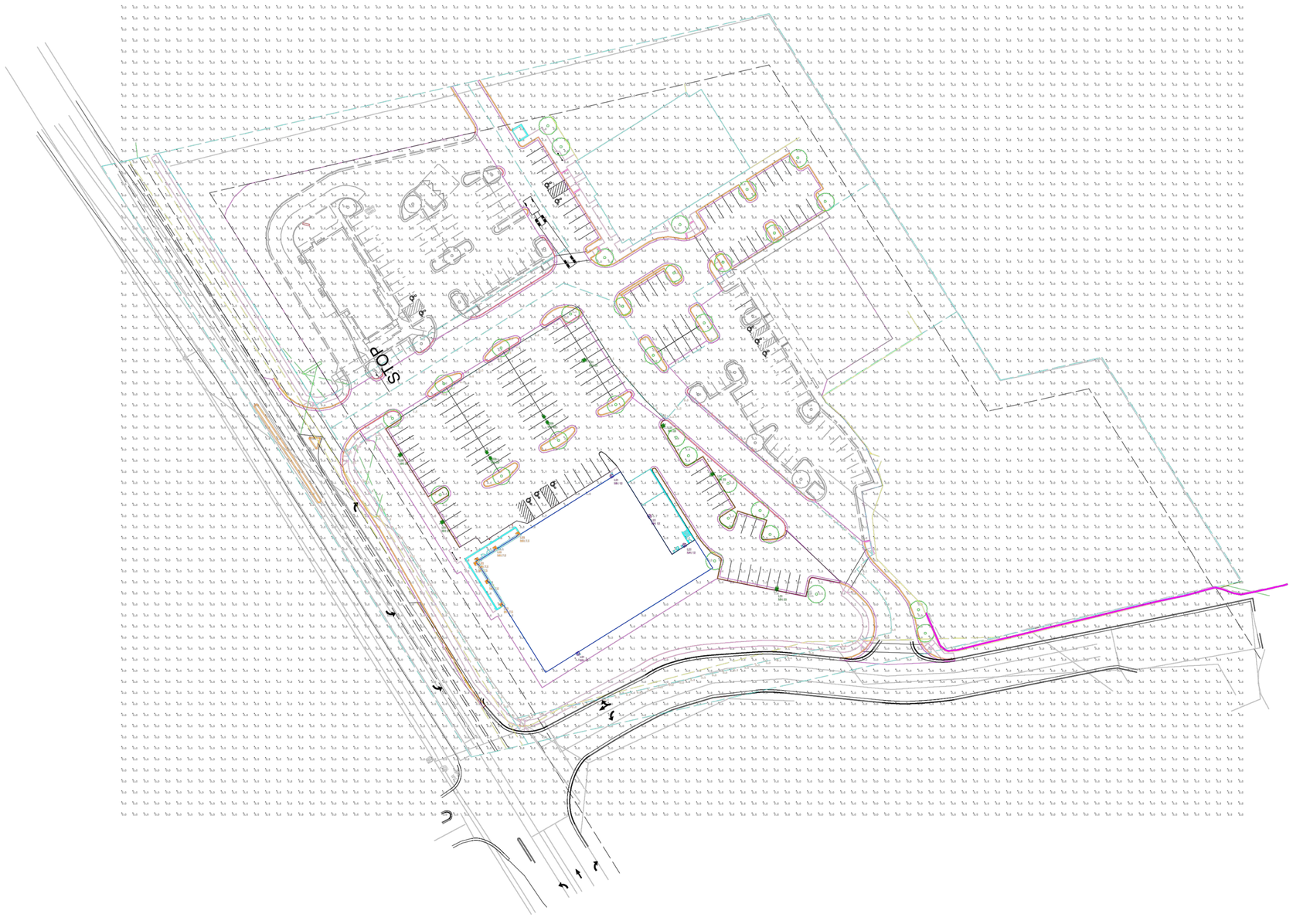

"DLC V4 is in effect as of April 1, 2017,
which impacts the rebate eligibility of many LED products.
If you require DLC-qualified fixtures,
please reference https://www.designlights.org/search/
for updated qualified product listings.
Email rebates@cree.com<mailto:rebates@cree.com> for assistance."

CREE™

1200 92nd Street - Sturtevant, WI 53177
www.cree.com - (800) 236-6800

Project Name: ALDI - WAXHOW, NC	SR-27325
Date:11/21/2017	Scale: 1"=50'
Footcandles calculated at grade	
Filename: V:\Common\AppEng\NAT\ALD-171121WHNCCB.AGI	Layout by: CHRIS BOSANEC

Illumination results shown on this lighting design are based on project parameters provided to Cree, Inc. used in conjunction with luminaire test procedures conducted under laboratory conditions. Actual project conditions differing from these design parameters may affect field results. The customer is responsible for verifying dimensional accuracy along with compliance with any applicable electrical, lighting, or energy code.

0 100 200