Engineering Design & Construction Standards Procedures Manual

February 2, 2017
Revised: August 13, 2019

Table of Contents

I. Administrative Procedures:

Page No.	Title
1	Overview
2	A. Introduction
2	B. Plan Review Checklist
2	C. Fees
2	D. Driveway Permits
3	E. Encroachment Permits
3	F. Bonding
4	G. Final Inspection
4	H. Street Maintenance Acceptance (into Town)

II. Design Criteria:

Page No.	Title
5	A. Introduction
5	B. Local Street Design
7	C. Storm Drainage
8	D. Utilities
8	E. Street Lighting
8	F. Signage
9	G. Landscaping
9	H. Cluster Box Units (CBU's)
10	I. Traffic Calming

III. Specifications and Special Provisions:

Page No.	Title
11	A. General Notes
13	B. 100 Series Drawings – Miscellaneous Concrete Infrastructure
14	C. 200 Series Drawings – Street Sections
15	D. 300 Series Drawings– Storm Drainage
16	E. 400 Series Drawings – Stormwater BMP
16	F. 500 Series Drawings – Erosion Control
16	G. 600 Series Drawings – Landscaping
16	H. 700 Series Drawings – Miscellaneous
16	I. Traffic Control
17	References
18	Appendix

IV. Standard Drawings:

100 Series - Miscellaneous Concrete Infrastructure

Standard	Description
100.1	Standard Curb and Gutter
101.1	Curb and Gutter
102.1	Transverse Expansion Joint
103.1	18” Vertical Curb
104.1	Curb Transition 2’-6” Curb and Gutter to 2’-0” Valley Gutter
105.1	Curb Transition 2’-6” Curb and Gutter to 1’-6” Curb and Gutter
106.1	Concrete Sidewalks Details and Notes
107.1	Monolithic Concrete Curb and Sidewalk
108.1	Commercial Type II and Residential Type I Drop Curb Driveway with Sidewalk Abutting Curb (2’-6” Curb and Gutter)
109.1	Commercial Type II and Residential Type I Drop Curb Driveway with Sidewalk Abutting Curb (6”x18” Vertical Curb)
110.1	Commercial Type II and Residential Type I Drop Curb Driveway with Sidewalk Abutting Curb (Near Low Points)
111.1	Residential Drop Curb Type I Driveway with Planting Strip (2’-6” Curb and Gutter)
112.1	Commercial Drop Curb Type II Driveway with Planting Strip (2’-6” Curb and Gutter)
113.1	Residential Drop Curb Type I Driveway with Planting Strip (6”x18” Vertical Curb)
114.1	Commercial Drop Curb Type II Driveway with Planting Strip (6”x18” Vertical Curb)
115.1	Type II Modified Driveway Detail with wide Planting Strip and Standard Curb
116.1	Type IV Driveway Standard (Roads without Curb & Gutter)
117.1	Drop Curb Driveway – Monolithic Concrete Curb and Sidewalk
118.1	Residential Driveway (Type I) for 2’-0” Valley Gutter
119.1	Commercial Type II Driveway for 2’-0” Valley Gutter
120.1	Type III Driveway Entrance
121.1	Catch Basin Frame in Valley Gutter
122.1	Catch Basin Placement at Intersections
123.1	Accessible Ramp Standard with Planting Strip 2’-6” Curb and Gutter
124.1	Accessible Ramp Sections with Planting Strip 2’-6” Curb and Gutter
125.1	Accessible Ramp Standard without Planting Strip 2’-6” Curb and Gutter
126.1	Accessible Ramp Sections without Planting Strip 2’-6” Curb and Gutter
127.1	Accessible Ramp Standard 2’-0” Valley Gutter
128.1	Accessible Ramp Sections 2’-0” Valley Gutter
129.1	Accessible Ramp Standard Monolithic Curb and Sidewalk
130.1	Accessible Ramp Sections Monolithic Curb and Sidewalk
131.1	Standard Placement of Accessible Ramps and General Notes
132.1	Truncated Domes Plan and Cross-Section
133.1	Culvert Crossings on Residential and Commercial Streets
134.1	Culvert Crossings on Residential and Commercial Streets General Notes
135.1	Typical Local Residential To Local Limited Residential Street Taper
136.1	Directional Accessible Ramp with Small/Medium Curb Radii
137.1	Directional Accessible Ramp with Large Curb Radius

200 Series - Street Section Details

Standard	Description
200.0	Residential Subdivision Utility Layout-Typical Section
200.1	Residential Local Street Parking on Both Sides of Street Typical Section
200.2	Residential Local Street Parking on One Side of Street Typical Section
200.3	Residential Local Street No On Street Parking Typical Section
200.4	Residential Local Street Ditch Type Typical Section
210.1	Residential Collector Street with Bike Lanes Typical Section
210.2	Residential Divided Collector Street Typical Section
210.3	Residential Divided Collector Street with Left-Turn Lane Typical Section
210.4	Residential Collector Street Ditch Type Typical Section
220.1	Retail/Mixed Use Local Street Parking On Both Sides of Street Typical Section
220.2	Retail/Mixed Use Local Street No Parking Typical Section
220.3	Retail/Mixed Use Local Street with Median and Parking Typical Section
220.4	Retail/Mixed Use Local Street Parking and Green Zone on Both Sides Typical Section
230.1	Retail/Mixed Use Collector Street with Bike Lanes Typical Section
230.2	Retail/Mixed Use Collector Street with Median and Bike Lanes Typical Section
240.1	Industrial Local Street Parking On Both Sides of Street Typical Section
240.2	Industrial Local Street Parking On One Side of Street Typical Section
240.3	Industrial Local Street No Parking Typical Section
250.1	Industrial Collector Street No On-Street Parking Typical Section
250.2	Industrial Collector Street with Median and No Parking Typical Section
280.1	Residential Local Street Cul-de-sac Detail
280.2	Retail/Mixed Use Local Street Hammerhead Detail
280.3	Residential Alley Detail One-way Operation
280.4	Residential Alley Detail Two-way Operation
280.5	Residential Local Street Temporary Turnaround
280.6	Non-Residential Cul-de-sac Detail
280.7	Residential Alley Hammerheads and Intersections
285.1	Local Street Parallel Parking Layout
285.2	Parallel Parking Standards
285.3	Parking, Sidewalk and Curb and Gutter Transitions at Residential Intersections
285.4	Parking, Sidewalk and Curb and Gutter Transitions at Retail/Mixed Use Intersections
290.1	Pavement Repair of Utility Cut-Typical Section
290.2	Temporary Trench Repair of Utility Cut-Typical Section

300 Series - Storm Drain Standards

Standard	Description
300.1	NCDOT Standards Approved For Use
301.1	NCDOT Standards Approved For Use
302.1	NCDOT Standards Approved For Use
303.1	Brick Double Catch Basin 15”-36” Pipe
304.1	Concrete Wingwall with Splash Pad
305.1	Concrete Wingwall with Splash Pad General Notes
306.1	Rip Rap Aprons at Pipe Outfalls other than SWIM
307.1	Flared End Section 12” Thru 72” Pipe
308.1	Rip Rap Plunge Pool

Standard	Description
310.1	Concrete Paved Ditches
311.1	Rip Rap Ditches
312.1	Subdrain Detail
313.1	Overlapping Storm Drain / Sanitary Sewer Easements
314.1	Minimum Drainage Easement Requirements for Storm Drain Pipes and Open Channels
315.1	Offset Catch Basin
316.1	Grading At Drop Inlet

400 Series – Stormwater BMP Details

Standard	Description
400.1	Bioretention Plan
401.1	Bioretention Cross-Section
402.1	Bioretention Planting Plan
404.1	Flow Splitter Structure
405.1	Wetpond Plan
406.1	Wetpond Profile
407.1	Wetpond Cross-Section
408.1	Wetpond Littoral Shelf and Berm Detail
409.1	Wetpond Planting Plan
410.1	Wetland Plan
411.1	Wetland Profile
412.1	Wetland Cross-Section
413.1	Wetland Details
414.1	Wetland Planting Plan
415.1	Enhanced Grass Swale Planting Plan
416.1	Enhanced Grass Swale Details
417.1	Grass Channel
418.1	Grass Channel Planting Plan
419.1	Infiltration Trench
420.1	Observation Well
421.1	Buffer Strip
422.1	Buffer Strip Planting Plan
423.1	Underground Sand Filter
424.1	Surface Sand Filter
425.1	Surface Sand Filter Section

500 Series - Erosion Control Standards

Standard	Description
500.1	Special Erosion Control Requirements and Notes
501.1	Temporary Sediment Trap
502.1	Skimmer Sediment Basin
503.1	Skimmer
504.1	Sediment Basin
505.1	Flexible Pipe Slope Drain
506.1	Temporary Silt Ditch
507.1	Temporary Silt Fence
508.1	High Hazard Temporary Silt Fence

Standard	Description
509.1	Standard Silt Fence Outlet
510.1	Block and Gravel Stone Inlet Protection
511.1	Stone Inlet Protection
512.1	Hardware Cloth and Gravel Inlet Protection
513.1	Temporary Rock Check Dam
514.1	Stabilized Construction Entrance
515.1	Construction Entrance Tire Wash
516.1	Gravel and Rip Rap Filter Berm Basin
517.1	Erosion Control Dewatering
518.1	Temporary Stream Crossing
519.1	Catch Basin Inlet Protection
520.1	Slope Stability
521.1	Temporary Seeding Schedule
523.1	Construction within Creek Bank
524.1	Baffle Installation
525.1	Embankment Matting Detail
526.1	Brick Storm Structure with Temporary Pipe

600 Series - Tree Standards

Standard	Description
600.1	Tree Planting
601.1	Tree Protection
602.1	Large and Small Maturing Tree Pit with Grate in Sidewalk (Plan)
603.1	Large and Small Maturing Tree Pit with Grate in Sidewalk (Section)
604.1	Large and Small Maturing Tree Pit with Grate in Sidewalk (Section)
605.1	Large and Small Tree Pit with Grate in Sidewalk (Section)
606.1	Typical Valve and Box Installation for Drip Irrigation Assembly for Tree Pit with Grate
610.1	Shrub Planting Bed
611.1	Median Greater than 120 Inches Excavation, Drainage, and Backfill
612.1	73 to 120 Inch Median Excavation, Drainage, and Backfill
613.1	48 to 72 Inch Median Excavation, Drainage, and Backfill
614.1	Root Flare Depths
615.1	Tree Planting Notes
616.1	Reinforced Concrete Sidewalk (Bridging Tree Roots)
617.1	Temporary Tree Protection Detail
618.1	Asphalt Curb Placement at Existing Trees
619.1	Rock Chimney

700 Series - Miscellaneous Standards

Standard	Description
700.1	Typical Safetyrail (Handrail)
701.1	Safetyrail (Handrail) Warrants
702.1	Non Thoroughfare Street Name Sign
703.1	Thoroughfare Street Name Sign
704.1	Street Name Sign Installation Locations
705.1	End of Roadway Marker
706.1	Dead End Street Barricade
707.1	End of Roadway Marker Guard Rail Clamp Installation
708.1	Street Connectivity Sign for End of Roadway Barricade
709.1	End of Roadway Street Barricade General Notes
710.1	Parking Standards
711.1	Parking Standards (Continued)
712.1	Accessible Parking and Signage Standards
713.1	Supplemental Van Accessible Sign (R7-8P)
714.1	Supplemental Accessible Penalty Sign
715.1	Emergency Vehicle Median Crossover
716.1	Inverted “U” Rack for Bicycle Parking
717.1	Wave Rack for Bicycle Parking
718.1	Bicycle Lockers
719.1	Curb Ramp for Cluster Box Units
720.1	CBU Placement for Shoulder Section Residential Local and Collector Subdivision Streets
721.1	CBU Placement for C & G Section Residential Local and Collector Subdivision Streets
722.1	CBU Placement for C & G Section Residential Subdivision Streets Cul-De-Sac
723.1	CBU Placement for Shoulder Section Residential Subdivision Streets Cul-De-Sac
724.1	USPS Approved Specifications Concrete Pad (Single Unit)
725.1	USPS Approved Specifications Concrete Pad (Multiple Unit)
726.1	Typical Sight Triangles
727.1	Parallel Parking Standards

APPENDIX

Table of Contents

A. Right of Way Encroachment Permit
B. Utility Pavement Cut Policy
C. Subdivision Inspection-Critical Items Checklist
D. Policy for Street Improvements and Maintenance
E. Street Lighting Policy
F. TIA Memorandum of Understanding
G. TIA Policy
H. Policy for Driveway Design & Construction
I. Driveway Permit Application
J. Traffic Calming Policy
K. Erosion and Sedimentation Control Ordinance
L. ESC Owner Form & Plan Checklist
M. Engineering Construction Document Review Checklist

Town of Waxhaw Engineering Standards and Procedures Manual

OVERVIEW

The Town of Waxhaw's Engineering Design & Construction Standards Procedures Manual (ED&CSPM) is provided as a resource that will assist in ensuring compliance with all Town requirements related to proposed land development activities inside the Town limits.

It is the Town's goal that the ED&CSPM present clear and concise technical requirements, policies, and procedures while providing the guidance and details necessary for an effective and efficient process.

The ED&CSPM is intended as a supplement to the Town *Unified Development Ordinance(UDO)*, and *Storm Water Design Manual*. Where discrepancies exist between this manual and any adopted Town Ordinance, the Ordinance shall govern. The latest revision of the *NCDOT Standard Specifications for Roads and Structures* and the *NCDOT Design Manual* shall apply to all roadway and storm drainage construction unless otherwise specified herein this manual.

County, State, and Federal agencies may also have additional requirements not provided for or referenced within this manual. In situations of conflicting or overlapping requirements, the more restrictive regulation applies. This manual does not relieve the design professional of the responsibility to correctly incorporate the provided information. It is the Design Engineer's responsibility to provide technical adequacy of the design using engineering judgment, experience, and sufficient knowledge in providing all related design elements.

The Town of Waxhaw's Town Engineer shall be responsible for incorporating revisions as deemed appropriate based on a continual review of the ED&CSPM. The Manual can be found at the Town website from the following link:

Engineering Design & Construction Standards Procedures Manual

This manual was created to capture most, but not all, scenarios related to development within the Town of Waxhaw. Town of Waxhaw Development Services Department reserves the right to enforce standards not included within this manual, which uphold the Town's initiative to maintain a safe environment for its citizens.

I. Administrative Procedures

A. Introduction

Processes and procedures for various plan review and development standards are discussed in this section. Each section provides information on the process, standard, or the plan review agency to contact regarding that process.

B. Engineering Plan Review Checklist (Forthcoming)

The *Engineering Plan Review Checklist* is a detailed list of the items to be reviewed by the Town Development Services Department or designee. The preliminary plan must include, at a minimum, the information described in the Town's Subdivision Ordinance and/or other applicable ordinances. A copy of the *Engineering Plan Review Checklist* will be included in the Appendix.

Note: The Town Planning Division maintains their own plan review checklists. Additionally, the duration of the plan review varies by review agency. Plan calculations and details are reviewed at this stage.

C. Fees

Fees for plan review are set and collected by the Town of Waxhaw Development Services Department. Fees vary by the type and size of development and are updated on an as needed basis. Plan review fees can be found at the below web address:

FEE SCHEDULE

D. Driveway Permits

Town Driveway Permit

A Town of Waxhaw Driveway Permit is required for all new or proposed modifications to connections to Town streets in accordance with the *Policy For Driveway Design & Construction*. A copy of the *Town Driveway Permit Application* is in the Appendix. If a property owner is proposing to do work in addition to driveway construction within Town maintained right-of-way, a Town Encroachment Permit may be required. Contact the Town Development Services Department at 704-843-2195 to confirm if a permit is needed.

Note: Two signed original copies of the driveway permit application along with two sets of plans are required for submission to the Town Development Services Department. A separate encroachment permit is not needed if a driveway permit has been obtained.

NCDOT Driveway Permit

When accesses and/or driveways to North Carolina Department of Transportation (NCDOT) maintained facilities are proposed or are proposed to be modified, contact the NCDOT Division 10 District 3 office at (704) 218-5100. Forms are available on the web at http://www.ncdot.gov/. The Town will review the NCDOT driveway permit applications for accesses proposed within the Town of Waxhaw.

E. Encroachment Permits

1. The Town of Waxhaw requires that an encroachment permit be obtained when construction activity, including installation of temporary or permanent structures, is proposed under, on, or over property in which the Town has property rights. Property rights include but are not limited to street rights of way, utility easements, or other owned property. An Encroachment Permit is required regardless of any other approvals (excluding a driveway permit), such as building permits or Planning Department entitlements. Encroachments for structures that also require a Building Permit will need to be reviewed concurrently and approval of Building Permit will not be granted if Encroachment is not permitted.

2. Encroachment Permit applications are processed through the Town of Waxhaw Development Services Department. A copy of the *Town of Waxhaw Right of Way Encroachment Agreement* is included in the Appendix. No advertising shall be permitted within Town of Waxhaw public right of ways.

F. Bonding

The following list contains information regarding the bonding process including minimum amounts, duration, and security type.

1. Release of the final subdivision plat will not occur until the improvements required for the area of the final plat are constructed and a final inspection has been performed and found to be in conformance with the plans approved by the Town, or a security has been posted with the Land Development Bond Coordinator of the applicable department and all required documents are received in their entirety.

2. Securities shall be posted for a minimum of six months with a two year maximum. The security shall be posted and remain in force until the construction is complete and found to be in conformance with the plans approved by the Town. The security will be reevaluated when an extension to the security is being considered.

3. Upon receipt of a notice from the bond holder, a final inspection will be made by the Town Engineer/Designee to check completeness of the project.

4. One type of security may be replaced by another type of security in certain situations. The amount of the replacement security will be based on the Town's Engineer Estimate of the work remaining. If the estimate of work results in a lower amount, the replacement security will be treated as a reduction. Certain situations will require an increase in a security and in such cases the replacement security shall be required to equal the higher amount.

5. A one-time reduction in security will be allowed if requested in writing by the principal party of the security. Additional reductions may be approved at the discretion of the Town Engineer.

6. Securities may be posted in the form of Surety, Letter of Credit, or Cash.

G. Final Inspection

The procedures for preparing new subdivision construction for final inspection are outlined in the *Subdivision Inspection Checklist-Critical Items*, located in Appendix-C. A final inspection of all streets to be turned over to the Town for Maintenance must be inspected by the Town or Town designated inspector. Contact the Town Engineer for scheduling of final inspections.

H. Street Maintenance Acceptance

The Town of Waxhaw may consider the acceptance of privately owned streets upon the written request of the owning entity. Streets will only be accepted in their entirety, or by block, and street construction, including required repairs and final inspection, must be completed at time of petition.

The procedures for preparing new subdivision streets for acceptance by the Town are outlined in the *Policy for Street Improvements and Maintenance*, located in Appendix-D.

II. Design Criteria

A. Introduction

The following sections present minimum design criteria for the design of public streets, storm drainage, street lighting, street and roadway signage for traffic regulation and street identification, and landscaping.

B. Local Street Design

For use in designing Residential and Retail/Mixed-Use Public Streets

Posted Speed Limit	**25**	**30**	**35**	**40**	**45**
Stopping Sight Distance* (feet)	155	225	285	***	***
Intersection Sight Distance - Left-Turn Movement From Stop*and ** (feet)	280	365	425	***	***
Intersection Sight Distance - Right-Turn From Stop*and ** (feet)	240	315	370	***	***
Minimum Horizontal Radius (Normal Crown) (feet)	200	430	675	***	***
Minimum K value for Crest Vertical Curves	11	24	37	***	
Minimum K value for Sag Vertical Curves	20	43	58	***	
Maximum Longitudinal Grade	10 percent				
Maximum Longitudinal Grade within 125 feet of intersection (measured from intersecting street nearest edge of pavement of travel way)	5 percent				
Intersection Angle Range	75 to 105 degrees				

* Values will need to be adjusted for grades of more than +/- 3 percent

** Values to be adjusted for streets with more than two total lanes; measurements to be taken 14.5' from travel lane

*** Refer to latest edition of American Association of State Highway and Transportation Officials *A Policy on Geometric Design of Highways and Streets*

Provisions of adequate stopping sight distance may require use of larger K values than the minimums listed above. The Town of Waxhaw reserves the right to prescribe more stringent sight distance standards and/or means to achieve adequate sight distance than those listed above. Recordation of sight distance easements may be required on plats prior to approval.

The minimum tangent distance between two horizontal curves is 50 feet. Longer distances may be needed based on the specifics of the roadway design.

Minimum curb and right-of-way radius measured from face of curb/edge of pavement (when intersecting streets have different classification, use the more restrictive):

- Residential Local Street – 20 feet
- Residential Local Street to Residential Alley – 10 feet
- Residential Collector – 25 feet
- Retail/Mixed-Use Local – 25 feet
- Retail/Mixed-Use Collector – 25 feet
- Industrial Local and Collector – 35 feet

For minimum intersection separation, use the following criteria:

- Along local streets – 125 feet
- Along collector streets –250 feet
- Along thoroughfares – to be determined by Town and/or NCDOT on a case-by-case basis

Intersection offsets/separation from a thoroughfare, at signalized intersections, or at intersections that may become signalized in the future may need to be greater that these minimums and will be determined by the Town and/or NCDOT on a case-by-case basis.

Design criteria for arterial streets shall be established jointly by the Town Engineer and the NCDOT on a case-by-case basis using the latest edition of the American Association of State Highway and Transportation Officials (AASHTO) *A Policy on Geometric Design of Highway and Streets* and/or NCDOT *Roadway Design Manual*.

Intersection corner easements – A minimum thirty-five (35) foot x thirty-five (35) foot sight triangular easement (measured along right-of-way lines) shall be provided at each intersection corner where any street type intersects a collector or thoroughfare. A minimum fifteen (15) foot x fifteen (15) foot triangular sight easement (measured along right-of-way lines) shall be provided at each intersection corner where two local streets intersect. An additional ten (10) foot x seventy (70) foot triangular sight easement shall be provided at intersections connecting to NCDOT maintained roadways (measured along right-of-way lines). Driveways (no formal right-of-way) to serve a single project may be required to provide triangular sight easements as determined on a case by case basis. Other triangular sight easements or sight distance requirements may be required by the NCDOT or the Town at all intersections.

<u>Sidewalks</u>

1. Planting strip adjacent to sidewalk shall be graded to one quarter inch per foot (min.) up to one and one quarter inch per foot (max.), except where excessive natural grades make this requirement impractical. In such cases, the Town Engineer may authorize a suitable grade.

2. Sidewalk widths shall be a minimum of five (5) feet unless otherwise specified.

3. Accessible ramps are required where sidewalks intersect curbing at any street intersection and curbed driveway connections.

Driveways

Refer to Appendix – H, the Policy for Driveway Design & Construction.

Roundabouts

Refer to the *Manual on Uniform Traffic Control Devices* (MUTCD) for roundabout signage and pavement markings.

C. Storm Drainage

1. In addition to this manual, all storm drainage design shall conform to the standards and specifications as provided in the *Town of Waxhaw Storm Water Design Manual*, and *NCDOT Standards Specifications for Roads and Structures*. If conflicts occur, the more restrictive standard shall govern.

2. Reinforced concrete pipe shall be used in all storm drain applications. Standard minimum pipe diameter shall be fifteen (15) inches and eighteen (18) inches for cross drain culvert. Culverts sixty (60) inches in diameter or greater may be Corrugated Aluminized Metal Pipe (CAMP) or aluminum with a minimum fourteen (14) gauge metal subject to approval of the Town Engineer.

3. The minimum cover for all pipes is two (2) feet measured from the final surface. Special applications for less than two (2) feet of cover will be reviewed and approved by the Town Engineer individually. The maximum cover for storm drainage pipes shall at a minimum comply with the requirements of the *NCDOT Roadway Design Manual*, Part I, Section 5, and *Drainage Design*. Storm pipe design that exceeds these criteria may be approved at the discretion of the Town Engineer.

4. All storm drain structures over three (3) feet six (6) inches in height must have steps in accordance with standard details set forth in this manual.

5. All graded creek banks and slopes shall be at a maximum of two (2) feet horizontal to one (1) foot vertical (2:1) and not to exceed ten (10) feet without terracing or the slopes shall be designed by a Professional Geotechnical Engineer and approved by the Town Engineer on a case by case basis.

6. Adequate storm drainage shall be provided throughout the development by means of storm drainage pipes or properly graded channels. All pipes shall be of adequate size and capacity, as approved by the Town Engineer, to carry all storm water in its drainage area.

7. In accordance with the Town Zoning Ordinance, the Town Engineer or duly authorized designee shall review the drainage plan for compliance with the standards contained in the current edition of the *Town of Waxhaw Engineering Design & Construction Standards Procedures Manual* and the *Town of Waxhaw Storm Water Design Manual* and all other relevant and appropriate standards established by the Town Development Services Department.

8. Sub-surface drainage shall be provided where the ground water level is likely to be near the surface. In capillary soils, the water level should be four (4) to six (6) feet below the surface to

prevent the rise of moisture into the subgrade. Subdrains shall be used to lower ground water in low areas in the street.

9. All Storm Drainage Easements must extend down stream of flared end sections to an appropriate property line or buffer. Overlapping of storm drainage easements shall be approved by the Town Engineer on a case by case basis.

10. Storm Drainage Easements shall be provided for all storm drainage pipes and shown on site plans, construction plans and plats with widths specified in detail 314.1. The following note shall be placed on all grading plans and plats; "*The purpose of the storm drainage easement (SDE) is to provide storm water conveyance. Buildings are not permitted in the easement area. Any other objects which impede storm water flow or system maintenance are also prohibited*."

11. In areas where the Floodway Regulations are applicable, the Future Conditions Floodplain 1% Annual Chance Fringe Line, Existing FEMA Floodplain 1% Annual Chance Fringe Line, FEMA Floodway Boundary, and FEMA 0.2% Annual Chance Floodplain Boundary shall be shown on the preliminary plan and the final plat. An application for a Floodplain Development/Zoning Permit shall be submitted in accordance with the requirements set forth in the Town/County Floodway Regulations.

D. Utilities

Refer to Standard *200.0-Utility Layout Typical Sec*tion for placement of utility in new subdivisions.

Avoid placement of sewer manholes in gutter pans, wheel paths, wheelchair ramps, and over stormwater lines.

Avoid placement of water lines under roadway pavement.

Water valves shall not be placed in curbing.

E. Street Lighting

1. Light Spacing

   Street lights shall be spaced not to exceed two-hundred and fifty (250) feet, as measured down the centerline of road, to be eligible for transfer to the Town street lighting account. Street lights shall also be located at all intersections and mid-block locations. There is no guarantee that the Town will accept the lights.

2. Major Pedestrian Areas within Public Rights-of-Way

   If an engineering evaluation indicates major pedestrian activities exist within public right-of-way, the Development Services Department may determine that special lighting should be specified. A lighting plan and cost estimate for the special lighting would be developed, and if funds are available to implement the plan, then the Development Services Department would coordinate the authorization and installation of the special lighting plan.

F. Signage

All regulatory, warning, and guide roadway signage shall be consistent with the *Manual on Uniform Traffic Control Devices (MUTCD)*, the *North Carolina Supplement to the MUTCD* or as specified in this manual. All street name markers are also to be designed in accordance with 700 series standard drawings. All street name markers shall be nine (9) inch tall extruded aluminum blades and utilize high intensity white prismatic reflective sheeting.

G. Landscaping

Refer to Section 9.8 of the Town of Waxhaw Unified Development Ordinance regarding landscaping requirements.

While landscaping can be installed at street intersections, it shall not block the sight distance of vehicles at the intersection. Sight distance for an intersection shall be calculated in accordance with Section II. B. of this manual. Trees should not be planted within forty (40) feet of an intersection radius return measured along the street along the main or side street of intersections or commercial development driveways.

Trees shall not be planted in permanent drainage easements or within ten (10) feet of a masonry drainage structure. (This does not apply to Stormwater BMP's.)

H. Cluster Box Units (CBU's)

Mail cluster box units shall be placed outside of the line of sight (determined by intersection sight distance measurements), sight distance triangles and intersection corner easements. They shall not be placed between the subdivision entrance and its first street intersection. It is best to avoid placing CBU's on the main entrance road to a subdivision, however, special cases may apply.

When locating CBU's near on-street parking, do not place units directly adjacent to the on-street parking. CBU's shall be behind the sidewalk in such cases.

When placing CBU's within the green zone, face of units shall be oriented perpendicular to the street.

Access easements shall be required for all CBU's located outside of the right-of-way and/or common open space.

The ultimate goal in determining locations for mail cluster box units is to avoid placing the CBU in any way which encourages driving on the wrong side of the street and/or hinders handicap accessibility. The above standards are included to supplement the requirements of the United States Postal Service and shall be followed in addition to USPS standards.

I. Traffic Calming

The Town of Waxhaw's goal is to provide safe and pedestrian friendly streets for all of the residents of the town while balancing the need for an efficient transportation network. As part of that goal we understand that traffic must be able to flow freely and to do so as safely possible. The Traffic Calming Policy (Appendix J) provides avenues for citizens to report and for staff to review concerns on existing roads. The policy shall also be implemented during development review to identify locations of potential traffic concerns and provide strategic measures to design new roads before they are accepted as part of the existing network.

Designers should incorporate traffic calming features into proposed plans to solicit driver behaviors are complementary to street classification and design speed. The Town Engineer may require the implementation of these measures as a conditions of plan approval.

III. Specifications and Special Provisions

A. General Notes

The following specifications and special provisions are intended to be used in conjunction with *Town of Waxhaw Standard Drawings, NCDOT Roadway Standard Drawings, and NCDOT Standard Specifications for Roads and Structures* for all development within the Town of Waxhaw unless otherwise directed by the Town Engineer.

1. Unless otherwise specified in this manual, **all work and materials shall conform to the latest edition of the *North Carolina Department of Transportation Standard Specifications for Roads and Structures*.**

2. All backfill material shall be non-plastic in nature, free from roots, vegetative matter, waste, construction material or other objectionable material. Said material shall be capable of being compacted by mechanical means and the material shall have no tendency to flow or behave in a plastic manner under tamping blows or while proof rolling.

3. Materials deemed by the inspector as unsuitable for backfill purposes shall be removed and replaced with select backfill material.

4. Compaction requirements shall be attained by the use of mechanical compaction methods, in eight (8) inch lifts, and shall be placed loose and thoroughly compacted into place to 95% of Standard Proctor, unless specified otherwise.

5. ALL concrete used in the public right-of-way for streets, curb and gutter, sidewalks and drainage structures, etc. shall have a minimum compressive strength of 3600 PSI at twenty-eight (28) days. This requirement shall be provided regardless of any lesser compressive strength specified in the *North Carolina Department of Transportation Standard Specifications for Roads and Structures*. The contractor shall prepare concrete test cylinders in accordance with Section 1000 of the *North Carolina Department of Transportation Standard Specifications for Roads and Structures* at the direction of the project inspector. All equipment and cylinder molds shall be furnished by the contractor. It shall be the responsibility of the contractor to protect the cylinders until such time as they are transported for testing. Testing for projects shall be performed by an independent testing lab, at no cost to the Town. The contractor shall provide equipment and perform tests on concrete for a maximum slump and air content as defined in Section 1000 of the *North Carolina Department of Transportation Standard Specifications for Roads and Structures*. These tests shall be performed at a frequency established by the inspector. Materials failing to meet specifications shall be removed by the contractor.

6. Concrete or asphalt shall not be placed until the air temperature measured at the location of the paving operation is at thirty-five (35) degrees Fahrenheit and rising by 10:00 a.m. Concrete or paving operations should be suspended when the air temperature is forty (40) degrees Fahrenheit and descending. The contractor shall protect freshly placed concrete or asphalt in accordance with Sections 420 (Concrete Structures), 600 (Asphalt Bases And Pavements), 700 (Concrete Pavements And Shoulders), and Division 08 (Incidentals) of the *North Carolina Department of Transportation Standard Specifications for Roads and Structures* when the air temperature is at or below thirty-five (35) degrees Fahrenheit and the concrete has not obtained an age of seventy-two (72) hours.

7. Plant all street trees in the middle of the planting strip unless otherwise noted on the standard detail.

Grading

1. Proposed street rights-of-way shall be graded to their full width for ditch type streets and a minimum of eight (8) feet behind the curb for curb and gutter sections.

2. Fill embankments shall be constructed in accordance with section 235 of the *North Carolina Department of Transportation Standard Specifications for Roads and Structures* and placed in successive lifts not to exceed more than six (6) inches in depth for the full width of the cross-section, including the width of the slope area. No stumps, trees, brush, rubbish or other unsuitable materials or substances shall be placed in the right-of-way. Each successive six (6) inch layer shall be thoroughly compacted by the sheepsfoot tamping roller, ten (10) ton power roller, pneumatic-tired roller, or other methods approved by the Town Engineer. Embankments over and around all pipe culverts shall be of select material, placed and thoroughly tamped and compacted as directed by the Town Engineer or his representative.

Roadway Base

1. All roadways shall be constructed with a base course as detailed on the applicable *Town of Waxhaw Standard Detail Drawing*.

2. The material for the aggregate base course (ABC) shall be in conformance with Section 520 – Aggregate Base Course of the *North Carolina Department of Transportation Standard Specifications for Roads and Structures*.

3. An asphalt concrete base course, as detailed on the *Standard Detail Drawing* may be substituted in lieu of an aggregate base course and shall be in accordance with all applicable articles of the *North Carolina Department of Transportation Standard Specifications for Roads and Structures*.

4. Asphalt concrete base course (ACBC) shall be used for widening strips less than five (5) feet in width.

Roadway Intermediate and Surface Course

1. Plant mixed asphalt shall conform in all respects to Section 610 of the *NCDOT Standard Specifications for Roads and Structures*.

2. The final one and one half (1.5) inch lift of asphalt surface course for residential subdivision streets shall be withheld until a minimum of eighty (80) percent of the development is occupied (occupied means a certificate of occupancy has been issued) (All documentation to be provided by the developer and approved by the Town Engineer or designee). All known base failures shall be repaired prior to application of the final one and one half (1.5) inch lift of asphalt surface course.

3. The Town Development Services Department shall be given at least a forty-eight (48) hour notification to inspect the first lift of surface course deficiencies. Prior to application of the final layer of asphalt, all deficiency repairs are to be monitored and accepted by the Town Engineer or designee.

4. The Town Development Services Department shall be notified prior to using recycled plant mixes.

5. Failure to meet any of the requirements of this manual may result in the delay or prevention of street acceptance by the Town of Waxhaw or NCDOT.

Sidewalks and Driveways

1. Sidewalks shall be constructed with concrete having a minimum compressive strength of not less than 3600 P.S.I. concrete. The sidewalk shall be at least six (6) inches thick where sidewalk crosses a driveway and at least four (4) inches thick in all other locations. The subgrade shall be compacted to ninety-five (95) percent of the maximum density obtainable with the Standard Proctor Test. The surface of the sidewalk shall be steel trowel and light broom finished and cured with an acceptable curing compound. Tooled joints shall be provided at intervals of not less than five (5) feet and expansion joints at intervals of not more than forty-five (45) feet. The sidewalk shall have a lateral or cross slope of one-quarter (1/4) inch per foot.

2. Planting strip adjacent to sidewalk shall be graded to one-quarter (1/4) inch per foot (min.) up to one and one-quarter (1 ¼) inch per foot maximum, except where excessive natural grades make this requirement impractical. In such cases, the Town Engineer may authorize a suitable grade.

3. Sidewalk widths shall be a minimum of five (5) feet unless otherwise specified.

4. Approval of sidewalk construction plans must be obtained as part of the plan review process. A recorded permanent public sidewalk easement is required for all sidewalk located outside public right-of-way; the width of the easement shall be specified by the Town. The sidewalk easement must be recorded with the Union County Register of Deeds prior to issuance of a certificate of occupancy for the corresponding building(s).

5. Accessible ramps are required where sidewalks intersect curbing at all street intersections and curbed driveway connections.

B. 100 Series Drawings – Miscellaneous Concrete Infrastructure

Drawings in this series include details for curb and gutter, sidewalks, driveways, accessible ramps, culvert crossings, and street tapers. The following list provides information in addition to that included in the standard drawings in this series.

1. All curb and gutter shall be backfilled with soil approved by the Inspector after three (3) days of cure time to prevent erosion. All curb and gutter shall be backfilled no later than forty-eight (48) hours after the three (3) day cure time.

2. All concrete shall be cured with one hundred (100) percent Resin Base, white pigmented curing compound which meets ASTM Specifications C-309, Type 1, applied at a uniform rate at one (1) gallon to four-hundred (400) square feet within twenty-four (24) hours of placement of the concrete.

3. Straight forms shall not be used for forming curb and gutter in curves.

4. All excess concrete on the front edge (lip) of gutter shall be removed when curb and gutter is poured with a machine.

C. 200 Series Drawings – Street Sections

Drawings in this series include details for street typical sections including pavement design, cul-de-sacs, parallel parking space location/layout, alleys, and hammerheads.

1. All asphalt cuts shall be made with a saw or milling machine when preparing street surfaces for patching or widening strips.

2. All subgrade shall be compacted to one-hundred (100) percent of the maximum density obtainable with the Standard Proctor Test to a depth of eight (8) inches, and a density of ninety-five (95) percent Standard Proctor for depths greater than eight (8) inches. All tests shall be performed by developer at no cost to the Town.

3. Paper joints shall be used to seal the ends of an asphalt mat so that future extensions can be made without causing rough joints.

4. When placing asphalt against existing surfaces, a straight edge shall be used to prevent "humping" at that location.

5. Stone shall be primed if paving is not complete within seven (7) days following stone base approval.

6. Surfaces shall be tacked when asphalt is being placed over existing asphalt streets or adjoining concrete, storm drain and sanitary sewer structures.

7. Sweeping of the stone base and/or application of a tack coat may be required near intersections. These requirements will be established by the Town/NCDOT Inspector based on field conditions.

8. A canvas cover or other suitable cover shall be required for transporting plant mix asphalt during cool weather when the following conditions are present:

    a. Air temperature is below sixty (60) degrees Fahrenheit.
    b. Length of haul from plant to job is greater than five (5) miles.
    c. Other occasions at the Inspector's discretion when a combination of factors indicates that material should be covered in order to assure proper placement temperature.

9. Roadside ditches shall conform to NCDOT standards unless otherwise specified by Town along Town maintained roads.

D. 300 Series Drawings – Storm Drainage

Drawings in this series include NCDOT standards approved for use, catch basins, wingwalls, riprap aprons, flared end section pipe, riprap plunge pools, trench drains, paved ditches, subdrains, overlapping of easements, minimum drainage easements, and grading at drop inlets. The following list provides information in addition to that included in the standard drawings in this series.

1. All concrete shall be at least 3600 PSI. Prior approval from the Town Engineer shall be obtained in order to use pre-cast storm drainage structures in any street right-of-way.

2. Concrete pipe used within the street right-of-way shall be a minimum of Class III Reinforced Concrete Pipe, with a minimum diameter of fifteen (15) inches (eighteen (18) inches minimum on cross drain culverts). See Design Criteria Section C for additional information. Installation of Class IV or higher concrete pipe shall be in Accordance with *NCDOT Standard Specifications* and be identified on the As-Built Plan. The Town Inspector shall be given documentation and notification of this information prior to construction.

3. Concrete mortar joints shall be used for joining all concrete pipes. The pipe shall be clean and moist when mortar is applied. The lower portions of the bell or groove shall be filled with mortar sufficient to bring the inner surface flush and even when the next joint is fitted into place. The remainder of the joint shall then be filled with mortar and a bead or ring of mortar formed around the outside of the joint. The application of mortar may be delayed until fill is completed when the pipe is larger than thirty (30) inches.

4. Preformed joint sealer, which conforms to AASHTO specification M-198 for Type B flexible plastic gaskets, may be used in lieu of the mortar joining method.

5. Under no circumstances shall water be permitted to rise in un-backfilled trenches after the pipe has been placed.

6. All new storm drain pipe installations shall be inspected with a video camera and reviewed with the Town Engineer or representative. The video camera and methods must be pre-approved by the Town Engineer or representative.

<u>Installation of Reinforced Concrete and Corrugated Metal Pipe</u>

1. All backfill shall be non-plastic in nature, free from roots, vegetative matter, waste, construction material or other objectionable material. Said material shall be capable of being compacted by mechanical means and shall have no tendency to flow or behave in a plastic manner under tamping blows or while proof rolling.

2. Materials deemed by the Engineer as unsuitable for backfill purposes shall be removed and replaced with select backfill material.

3. Backfilling of trenches shall be accomplished immediately after the pipe is laid. The fill around the pipe shall be placed in layers not to exceed eight (8) inches, each layer shall be thoroughly compacted to ninety-five (95) percent of the maximum density obtainable with the Standard

Proctor Test. A density of one-hundred (100) percent Standard Proctor is required for the top eight (8) inches.

4. Compaction requirements shall be attained by the use of mechanical compaction methods. Each layer of backfill shall be placed loose and thoroughly compacted in place.

E. 400 Series Drawings – Stormwater BMP

Drawings in this series include bioretention, flow splitters, wetponds, wetlands, grass swales, grass channels, infiltration ditches, observation wells, buffer strips, sand filters, and level spreaders.

F. 500 Series Drawings – Erosion Control

Drawings in this series include sediment traps, skimmers, pipe slope drains, silt ditches/fences, inlet protection, check dams, construction entrances, filter berm basins, dewatering, stream crossings, slope stability, seeding schedules, construction within creek banks, baffles, embankments, and brick storm structures.

1. The contractor shall do that which is necessary to control erosion and to prevent sedimentation damage to all adjacent properties and streams in accordance with the appropriate NCDWQ *Regulations for Sedimentation and Erosion Control*, and Town *Erosion and Sedimentation Control Ordinance*. The Town Ordinance, Permit Application forms, and Plan Review Checklist can be found in the Appendix, and on the website by following the link below:

   EROSION CONTROL PROGRAM INFORMATION

G. 600 Series Drawings – Trees

Drawings in this series include tree plantings/protection, tree pits, irrigation, valve boxes shrub plantings, medians, root crown depths, planting notes, bridging tree roots, asphalt curb placement at existing trees, and rock chimneys.

H. 700 Series Drawings – Miscellaneous

Drawings in this series include concrete control monuments, handrails, street name signs, end of road devices and markers, parking standards, accessible parking signage, roundabout signage, emergency vehicle median crossovers, bicycle racks, bicycle lockers, and Cluster Box Units.

I. Traffic Control

The contractor shall maintain two-way traffic at all times when working within existing streets. The contractor shall place and maintain signs, danger lights, and barricades and furnish watchmen or flagmen to direct traffic in accordance with the latest edition of the *Manual on Uniform Traffic Control Devices (MUTCD).*

Lane restrictions limiting the Contractors work to certain times of the day and days of the week may be imposed at the discretion of the Town Engineer. See section D & E of the *Utility Pavement Cut Policy* in the Appendix.

References

1. North Carolina Department of Transportation, most recent edition, Standard Specifications for Roads and Structures.
2. North Carolina Department of Transportation, most recent edition, Roadway Standards Drawings.
3. Town of Waxhaw Storm Water Design Manual.
4. American Association of State Highway and Transportation Officials most recent edition, A Policy on Geometric Design of Highways and Streets.
5. North Carolina Department of Transportation, Roadway Design Manual, latest edition.
6. North Carolina Department of Environmental Quality most recent edition, Erosion and Sediment Control Planning and Design Manual.
7. Manual of Uniform Traffic Control Devices for Streets and Highways, Federal Highway Administration, latest edition.

APPENDIX

APPENDIX – A

Right of Way Encroachment Permit – General Requirements

Encroachment permits are required for any type of surface disturbing work on public roads or new aerial installation (e.g. signs) within the street rights-of-way. However, applying for a permit does not guarantee approval. The following are general requirements and vary based on the type of installation:

1. Developers, companies, and / or individuals working within the street rights-of-way initiate encroachment permit submittals.

2. The permit submittal shall include:
    a. Three (3) copies of the approved plan showing detailed information as to the type and nature of the work being performed in the right-of-way. The lack of plan clarity is sufficient cause for rejection.
        i. One plan for Town Engineer for approval
        ii. One plan maintained on site
        iii. One plan given to Waxhaw Public Services
    b. Type of installation, owner, and method of installation are required.
    c. Longitudinal installations should provide the following information in the location description:
        Starting point referencing nearest intersecting roads, approximate lengths of segments, bearing direction, and side of road.
    d. Individual crossings and single point installations (e.g. individual utility poles) should provide a distance of the installation from the nearest intersecting roads and side of the road.
    e. Project description should include the following items:
        Length of installation (feet), size (inch diameter) of utility and easement, material and utility type and installation method.
    f. Any non-franchised or private installations in the right-of-way may require additional approval from the Town Engineer, other affected Town departments, and the Town Board of Commissioners prior to issuing any permit for this type of installation.
    g. Signed Right-of-Way Encroachment Agreement Form, see Section C page 3. (Provide two (2) copies if an original is required to be returned to the applicant.)

3. Following the submittal process the Agreement will be reviewed by the Board through the consent process and will then be signed by the Town Manager.

Revised August 13, 2019

4. Permit forms are located at the Town Hall Permit Technician desk. Upon application review, approval, and fee payment (if applicable), the permit will be issued to the applicant. Work cannot proceed until the permit is issued and onsite with your contractor.

5. Review time depends on the nature of the request and will vary based on the scope of work to be performed within the right-of-way. An onsite review is required in most cases, a minimum of a 48-hour turnaround is expected.

6. Encroachments for structures that also require a Building Permit will need to be reviewed concurrently and approval of Building Permit will not be granted if Encroachment is not permitted.

7. If there are any questions concerning *Town of Waxhaw Right of Way Encroachment Permits*, please contact the Town of Waxhaw, Engineering Division (704) 843-2195.

8. State Routes require *North Carolina Department of Transportation Encroachment Permit*.

9. For work involving temporary road closures, submit a *Temporary Road Closure Form* to Town Clerk. Forms are located on Town of Waxhaw website at Town of Waxhaw Temporary Road Closure Form.

AGREEMENT INSTRUCTIONS

(Duplicated on Agreement Form)

In the space provided in this agreement for execution, the name of the corporation or municipality shall be typed above the name, and title of all persons signing the agreement should be typed directly below their signature. The address should be included in this agreement and the names of all persons signing the agreement should be typed directly below their signature. ***All blank spaces shall be filled in by Encroacher, except space for Town Manager signature, and the date of Agreement***.

GENERAL

1. Wherever possible, roadway crossing should be located within the prevailing right of way of intersecting roads, or within a related Utility Easement.
2. Crossings should be as near as possible perpendicular to the center line of the roadway.
3. Town of Waxhaw Public Services should be given notice by the applicant prior to actual starting of installations included in this agreement.
4. No advertising is permitted within the Town of Waxhaw public right of way, and an Encroachment for such purposes will not be granted.

For Overhead Wire Lines

1. Minimum vertical clearances of overhead wires above all roadways must conform to clearances set out in the National Electric Safety Code.

For Underground Utilities

1. Open-cut installation for crossings will be permitted only when a highway project is in rough grading stage prior to paving. Generally, on rough grading projects, open-cut will not be permitted in fills of over 10 feet in depth and back filled material must be compacted to maximum density meeting the Town of Waxhaw's requirements.
2. Encasements under an existing roadway must be installed by means of tunneling, jacking, or boring and any voids outside the encasement must be filled with lean concrete grout and the ends of encasements be satisfactorily closed.
3. In cut section, encasement must extend continuously from ditch line to ditch line and in fill section; encasement must extend continuously five feet beyond toe to slopes.
4. Vents for encasement should be extended to the right of way line or as otherwise required by the Town of Waxhaw. Manholes, meter and valve boxes, etc. shall be flush with final grade.
5. When trenching is carried down cut slopes, excavation must be backfilled to maximum density and the disturbed portion of the slope be stabilized and

sodded to the satisfaction of the Town Engineer, Public Services Director or Assignee.

Plans

This Encroachment agreement must be accompanied, in the form of an attachment, by a plan showing the following:

1. All roadways and ramps
2. Right of way
3. Drainage structures or bridges if affected by encroachment
4. Location of the proposed encroachment
5. Length, size and type of encroachment
6. Dimensions, showing the distance from the encroachment to roadways, shoulders, structures, etc.
7. Location by roadway survey station number. If station number cannot be obtained, location should be shown by distance from some identifiable point, such as a bridge, road intersection, etc.

All encroachment agreements involving the crossing of the right of way, roadways and/or ramps of a roadway, must be accompanied, in the form of an attachment, by a profile showing the following information:

1. The profile should extend from right of way line to right of way line and show all slopes (cut or fill), ditches, shoulders, pavements, medians, etc.
2. A vertical dimension from bottom of road ditches and from surface of pavement to encroaching structures.
3. Length, size, and type of encasement where required.
4. Notation of portion to be installed by open-cut.
5. For underground encroachments involving encasements that must be vented, the location of vents must be shown.
6. Method of installation must be shown in detail on either the plan or profile.
7. Any attachment to a bridge or other drainage structure must be approved by Town Engineer, Public Services Director or Assignee.
8. Where profile is required, it should be on same sheet with the plan.

SPECIAL PROVISIONS OR SPECIFICATIONS

Any special provisions or specifications as to the performance of the work or the method of construction that may be required by the Town of Waxhaw must be shown on a separate sheet attached to encroachment, provided that such information cannot be shown on the plan and profile sheet.

State of: **North Carolina**
County of: **Union**

STREET NAME: _____ PROJECT: _____

TOWN OF WAXHAW
-AND-

_____

_____
Name and Address of Entity Requesting Encroachment

RIGHT OF WAY ENCROACHMENT AGREEMENT TOWN OF WAXHAW

THIS ENCROACHMENT AGREEMENT made and entered into this the_____day of _____, 20___, by and between the Town of Waxhaw ("Town") and ("Encroacher").

W I T N E S S E T H

THAT WHEREAS, Encroacher desires to encroach on the right of way of the public road designated as located approximately _____with the construction and/or erection of:_____ as shown on the attached drawings; and

WHEREAS, it is to the material advantage of Encroacher to effect this encroachment, and Town in the exercise of authority conferred upon it by NCGS §160A-296 , is willing to permit the encroachment within the limits of the right of way as indicated, subject to the conditions of this agreement.

NOW, THEREFORE, IT IS AGREED that Town hereby grants to Encroacher the right and privilege to make this encroachment as shown on attached plan sheet(s), specifications and special provisions which are made a part hereof upon the following conditions, to wit:

Encroacher binds and obligates himself to install and maintain the encroaching facility in such safe and proper condition that it will not interfere with or endanger travel upon said highway, nor obstruct nor interfere with the proper maintenance thereof, to reimburse Town for the cost incurred for any repairs or maintenance to its roadways and structures necessary due to the installation and existence of the facilities of Encroacher.

That Encroacher agrees to provide during construction and any subsequent maintenance proper signs, signal lights, flagmen and other warning devices for the protection of traffic in conformance with the latest Manual on Uniform Traffic Control Devices for Streets and Highways and Amendments or Supplements thereto. Information as to the above rules and regulations may be obtained from the Town Engineer, Public Services Director or Assignee.

That Encroacher hereby agrees, to the extent permitted by applicable law, to indemnify and save harmless Town from all damages and claims for damage that may arise from the installation and maintenance of this encroachment; provided, however, that Encroacher shall not be obligated to indemnify and save harmless Town with respect to damages or claims for damage to the extent arising from the operation and maintenance of the public right of way. **No advertising shall be permitted within Town of Waxhaw public right of ways**.

That Encroacher agrees to restore all areas disturbed during installation and maintenance to the satisfaction of the Town Engineer, Public Services Director or Assignee. Encroacher agrees to exercise every reasonable precaution during construction and maintenance to prevent eroding of soil; silting or pollution of rivers, streams, lakes, reservoirs, other water impoundments, ground surfaces or other property; or pollution of the air. There shall be compliance with applicable rules and regulations of the North Carolina Division of Environmental Management, North Carolina Sedimentation Control Commission, and with ordinances and regulations of various counties, municipalities and other official agencies relating to pollution prevention and control. When any installation or maintenance operation disturbs the ground surface and existing ground cover, Encroacher agrees to remove and replace the sod or otherwise reestablish the grass cover to meet the satisfaction of the Town Engineer, Public Services Director or Assignee.

That Encroacher agrees to assume the actual cost of any inspection of the work considered to be necessary by the Town Engineer, Public Services Director or assignee.

That Encroacher agrees to have available at the construction site, at all times during construction, a copy of this agreement showing evidence of approval by Town. Town reserves the right to stop all work unless evidence of approval can be shown.

Provided the work contained in this agreement is being performed on a completed roadway open to traffic; Encroacher agrees to give written notice to the Town Engineer, Public Services Director or Assignee when all work contained herein has been completed. Unless specifically requested by Town, written notice of completion of work on roadway projects under construction will not be required.

That in the case of noncompliance with the terms of this agreement by Encroacher, Town reserves the right to stop all work until the facility has been brought into compliance or removed from the right of way at no cost to Town.

In the event that Town decides, in its sole discretion, to close, relocate, widen or otherwise modify the street within such right-of-way that Encroacher has encroached upon, Encroacher agrees to relocate or remove the encroaching infrastructure at Encroacher's sole cost and expense. Town will attempt to accommodate relocation but may require removal if the street right of way is closed or relocation is impractical or conflicts with Town goals.

That it is agreed by both parties that this agreement shall become void if actual construction of the work contemplated herein is not begun within one (1) year from the date of authorization by Town unless written waiver is secured by Encroacher from Town.

That Encroacher agrees to be held responsible for contacting North Carolina 811 and locate all underground utility lines prior to digging.

IN WITNESS WHEREOF, each of the parties to this agreement has caused the same to be executed the day and year first above written.

TOWN OF WAXHAW

_____ BY: _____

Name of Encroaching Entity Town Manager

_____

Signature of Responsible Party

_____

Printed Name and Title

Attest or Witness:

_____

Signature

_____

Printed Name and Title

_____

Name and Contact # for Site Superintendent

INSTRUCTIONS

In the space provided in this agreement for execution, the name of the corporation or municipality shall be typed above the name, and title of all persons signing the agreement should be typed directly below their signature. The address should be included in this agreement and the names of all persons signing the agreement should be typed directly below their signature. *All blank spaces shall be filled in by Encroacher, except space for Town Manager signature, and the date of Agreement*.

GENERAL REQUIREMENTS

1. Wherever possible, roadway crossing should be located within the prevailing right of way of intersecting roads, or within a related Utility Easement.
2. Crossings should be as near as possible perpendicular to the center line of the roadway.
3. Town of Waxhaw Public Services should be given notice by the applicant prior to actual starting of installations included in this agreement.
4. No advertising is permitted within the Town of Waxhaw public right of way, and an Encroachment for such purposes will not be granted.

For Overhead Wire Lines

1. Minimum vertical clearances of overhead wires above all roadways must conform to clearances set out in the National Electric Safety Code.

For Underground Utilities

1. Open-cut installation for crossings will be permitted only when a highway project is in rough grading stage prior to paving. Generally, on rough grading projects, open-cut will not be permitted in fills of over 10 feet in depth and back filled material must be compacted to maximum density meeting the Town of Waxhaw's requirements.
2. Encasements under an existing roadway must be installed by means of tunneling, jacking, or boring and any voids outside the encasement must be filled with lean concrete grout and the ends of encasements be satisfactorily closed.
3. In cut section, encasement must extend continuously from ditch line to ditch line and in fill section; encasement must extend continuously five feet beyond toe to slopes.
4. Vents for encasement should be extended to the right of way line or as otherwise required by the Town of Waxhaw. Manholes, meter and valve boxes, etc. shall be flush with final grade.
5. When trenching is carried down cut slopes, excavation must be backfilled to maximum density and the disturbed portion of the slope be stabilized and sodded to the satisfaction of the Town Engineer, Public Services Director or Assignee.

Plans

This Encroachment agreement must be accompanied, in the form of an attachment, by a plan showing the following:

1. All roadways and ramps
2. Right of way
3. Drainage structures or bridges if affected by encroachment
4. Location of the proposed encroachment
5. Length, size and type of encroachment
6. Dimensions, showing the distance from the encroachment to roadways, shoulders, structures, etc.
7. Location by roadway survey station number. If station number cannot be obtained, location should be shown by distance from some identifiable point, such as a bridge, road intersection, etc.

All encroachment agreements involving the crossing of the right of way, roadways and/or ramps of a roadway, must be accompanied, in the form of an attachment, by a profile showing the following information:

1. The profile should extend from right of way line to right of way line and show all slopes (cut or fill), ditches, shoulders, pavements, medians, etc.
2. A vertical dimension from bottom of road ditches and from surface of pavement to encroaching structures.
3. Length, size, and type of encasement where required.
4. Notation of portion to be installed by open-cut.
5. For underground encroachments involving encasements that must be vented, the location of vents must be shown.
6. Method of installation must be shown in detail on either the plan or profile.
7. Any attachment to a bridge or other drainage structure must be approved by Town Engineer, Public Services Director or Assignee.
8. Where profile is required, it should be on same sheet with the plan.

SPECIAL PROVISIONS OR SPECIFICATIONS

Any special provisions or specifications as to the performance of the work or the method of construction that may be required by the Town of Waxhaw must be shown on a separate sheet attached to encroachment, provided that such information cannot be shown on the plan and profile sheet.

APPENDIX-B

Utility Pavement Cut Policy

Section A. General

The Town of Waxhaw is charged with regulating the public Right of Way (ROW) in the interest of its citizens. Multiple departments are responsible for exercising control and coordination over various utility companies and private contractors when working within the right-of-way. The objective is to ensure infrastructure integrity, provide public safety, and minimize any necessary inconveniences to the public. The Town of Waxhaw also acknowledges a definite need and obligation to accommodate utility companies in providing services to customers with the understanding that infrastructure is restored to its intended use in equal or better quality.

Utility companies and private contractors understand the primary purpose of the public roadways is to provide a means of travel so citizens may move from one location to another in a safe, timely and convenient manner. This purpose precedes any secondary right-of-way purpose.

Utility pavement cut is defined as any cutting of existing asphalt or concrete paved street and sidewalk for utility work. Utility work can be any work by a franchised utility company such as telephone carriers, power, cable television, natural gas, fiber optics, or any licensed contractors tying into County maintained water and sanitary sewer mains, or storm water systems.

Section B. Permit Process

A Town of Waxhaw *Right of Way Encroachment Permit* will be required for all utility pavement cuts and installations in the public right-of-way. The Engineering Division is responsible for issuing these permits.

Applicants must submit three copies of the plan or sketch showing detailed information (maximum size 11” x 17”) of intent of proposed work, and evidence of approved construction plan. Photocopies of approved construction plans, are acceptable. Pavement cut dimensions must be indicated on the plan submitted and based on final repair dimensions. Lack of plan clarity is sufficient cause for rejection.

Approved permits must be available at job site at all times and shown to any representative of the Town of Waxhaw upon request. The name, address and phone number of company conducting work are required along with emergency phone number in case a hazardous situation should arise needing immediate response. A permit not on site may result in a stop work order being issued.

Revised August 13, 2019

A separate Road Closing application may be required. These are obtained from Town of Waxhaw website at Town of Waxhaw Temporary Road Closure Form.

Section C. Standards and Specifications

The following are procedures for repairing public streets after pavement has been cut.

Excavation perimeter must be saw cut to provide a clean, straight edge, and vertical sides. Cut and repair must be in accordance with Town standards including rectangular final repair with four (4) interior 90 degree angles, and flush with existing pavement. Additional requirements may be requested based on Town inspection.

1. Field work, including adequate trench shoring, is to be conducted in full compliance with all Occupational Health and Safety Administration (OSHA) safety standards. (osha.gov)

2. Street restoration must be saw cut after trench backfill and extend beyond the other edge of widest portion of section according to Town standard. If more than one excavation is involved, including existing pavement repair, and less than five (5) feet apart or within two (2) feet of concrete gutter line, restoration shall be continuous between excavations and/or concrete edge. Pavement structure shall be restored to ***Town Standard 290.1**** at a minimum.

3. If one particular project causes multiple excavations within a given stretch of a street, that street may be subject to a complete asphalt overlay of a minimum depth of 2 inches of asphalt. The overlay shall extend for a minimum length of 20 feet beyond the last cut at each end of the excavated area. A mill out and/or asphalt overlay may be required depending on condition of the road, magnitude of pavement cut, location of pavement cut, and other mitigating circumstances. This decision will generally be made during the Encroachment/Utility Cut approval process, unless field conditions do not match the plan submittal as approved and subsequently deemed necessary based on site inspection.

4. Notify the Town of Waxhaw Public Services at 704-843-7439, at least 24 hours prior to construction.

5. The Police and Fire Departments shall be notified 24 hours in advance of pavement open cutting by the contractor. For non-emergency work, contact the Police Department at (704) 843-0353, the Fire Department at (704) 843-4001, and Union County Communications at (704) 289-1591 to provide notice.

6. Pedestrian and/or vehicular traffic shall be maintained through the work area at all times. Only one lane may be closed at any given time unless otherwise approved per a *Temporary Road Closure Form*. See *Section D Work Hours* page 4 of this policy.

7. Proper traffic control devices, signs, etc. in accordance with the *Manual on Uniform Traffic Control Devices* (MUTCD) shall be installed to insure public safety. (mutcd.fhwa.dot.gov/)

8. Pavement is to be saw cut. Cuts shall be perpendicular to Edge of Pavement (EOP)

9. Contractor is responsible for providing adequate shoring in all trenches to prevent collapse during construction, in accordance with current OSHA requirements.

10. Typically, **no trenches are to be open overnight**. Patching is to be performed the same day the cut is made. Repair should match existing road elevation with no dips or raises.

11. 1 inch metal plates shall be used **if work is to remain open overnight** on public right of ways. Plate must be positively secured and capable of withstanding traffic loads. Express written consent from Engineering Division is required so inspection can be made prior to leaving the job site. Notify Assistant Town Engineer at (704) 843-2195. Should the work necessitate temporary backfill, a temporary repair shall be in accordance with ***Town Standard 290.2****

12. New, clean fill material must be used to replace displaced material to achieve the required compaction of 95% standard proctor.

13. The Town Engineering Division reserves the right to require the contractor to employ the services of a geotechnical firm to run a density test and to certify the compaction of the backfill material, at the cost of the contractor. Each contractor is responsible for ensuring compaction requirements are met.

14. Engineering Division shall log all trench repairs into database stating the location, size of patch, contractor, date permit was issued and date accepted as complete. The involved utility company or private contractor will be held responsible for any pavement cut repairs that fail within six (6) months of date of completion.

15. All Utility cuts must be properly color coded with spray paint as specified by American Public Works Association uniform color code, as follow.

	Proposed excavation
	Temporary survey markings
	Electric power lines, cables, conduits and lighting cables
	Gas, oil, steam, petroleum, or gaseous materials
	Communication, alarm, or signal lines, cables or conduits
	Potable water
	Reclaimed water, irrigation, and slurry lines
	Sewers and drain lines

16. Contractors are responsible for contacting NC 811 for underground utility location.

Section D. Work Hours

1. Pedestrian and/or vehicular traffic must be maintained at all times. Verification of traffic control needs may be required as a condition of the Encroachment Agreement, and be approved by Town of Waxhaw Engineering Division. Traffic control devices must be in accordance with the *Manual on Uniform Traffic Control Devices* (MUTCD). Lane closure permits may include other stipulations. Equipment and material must not interfere with site distances.

2. If utility work is incomplete at end of workday, traffic lane must be reopened using temporary patch or road plate See *Section C: Standards and Specifications* per note 11, page 3.

Section E. Emergency Work

No permit is required prior to emergency work. Emergency situation are classified as immediate and clear danger to life or property. Involved utility company is expected to take appropriate action as necessary to address the situation. Contact Waxhaw Public Services at 704-843-7439 and provide notice of emergency work as soon as possible.

Section F. Inspection Procedures

The Town Engineer or his designee will conduct inspections of utility pavement cuts. A minimum of three inspections are required for each repair. One after preparation, prior to paving; one inspection after paving, and one six-month follow-up inspection.

A typical inspection will verify:

- The surface of the patch is level with, or no higher than, 0.25 inches above the grade of the original pavement surface.
- No apparent raveling, cracking, or flaw at sawcut line (1/16-inch maximum).
- No ponding or stormwater infiltration is apparent.

If a patch fails within six (6) months, and conditions permit, the contractor will be given seven (7) days to complete repairs, or will be billed the cost incurred for the Town to make repairs. Any contractor that fails to make proper repairs, or repay the Towns cost will not be approved for further Encroachments/Utility Cuts.

*****References the Town of Waxhaw *Engineering Design & Construction Standards Procedures Manual,* Latest Edition

APPENDIX-C

Subdivision Inspection Checklist-Critical Items

__Receipt of approved Grading/Subdivision Plans from the Town

__Schedule Pre-construction Meeting with the Town

CONDUCT INSPECTIONS FOR:

__ Grading

- Drainage areas
- Slopes no greater than 2:1 unless per approved plan
- Pavement at minimum 2% slope or if less than 2%, built per plan

__Storm Drainage

- Density test have been performed on all trenches as directed by Inspector
- All cracked/damaged pipes are to be replaced and not patched unless approved otherwise by Inspector
- Catch basins are within a 6" tolerance of alignment and flush with face of grate in subgrade
- Catch basins are grouted and set to grade
- State ROW - All pre-cast catch basins and RCP pipe have NCDOT stamp.(Pink Brick)
- All pre-cast catch basins are certified from manufacturer
- Storm water as-builts have been approved **BEFORE** any final inspections are scheduled.

SUBGRADE APPROVAL:

___ All storm drainage and underground utilities are completed

___Structure tops are below sub grade.

___All catch basins have been bricked in except for weep holes.

___All Manholes meet proper cross slope/grade

___Sub grade is graded within tolerances and is neat, clean, trimmed and rolled down

___Contractor or owner has submitted the following Subgrade Compaction Report:

Private Lab Soil Compaction Reports- Conduct random sub grade tests at 250 feet intervals along the roadway length or as directed by the Town Engineer. All subgrade shall be compacted to 100% of the maximum density obtainable with the Standard Proctor Test to a depth of eight (8) inches, and a density of 95% Standard Proctor for depths greater than eight (8) inches. All tests are performed by the developer at no cost to the Town.

___ Proof-roll sub grade in accordance with NCDOT Specifications or as directed by the Town Engineer.

STONE BASE APPROVAL:

___Stone base is compacted and graded within tolerances.

___All edges and manholes are trimmed to the proper depth, and any loose stone is removed. All manholes covers are adjusted to final pavement grade and slope.

___ Contractor or owner has submitted the following Stone Base Compaction Report:

Private Lab Stone Base Compaction Report- Conduct random stone base tests at 250 feet intervals along the roadway length or as directed by the Town Engineer. The stone base shall be compacted to 100% of the maximum density obtainable with the Modified Proctor Test. Field Nuclear density testing may be used. All tests are performed by the developer at no cost to the Town.

___ Contractor has completed a self-proof roll and cut out any obviously bad areas BEFORE calling for inspection

___Proof-roll stone base in accordance as directed by the Town Engineer

___ After approval of the stone base, coordinate the paving schedule with the Town Inspector

___ Curb and Gutter

- Catch basins are grouted and set to grade
- Ensure proper placement per plan
- Joints sealed and free of cracks
- Meet minimum 0.5% slope

___ Sidewalks and Handicap Ramps

- Cross slope does not exceed ¼"/ft
- Ramps have ADA compliant truncated domes
- Confirm sidewalk is in right-of-way
- Confirm planter strip width
- Confirm sidewalk width

__Signs

- Sign is 7' from ground to bottom of sign
- Signage text shall meet Town standards
- Signs are placed behind sidewalk within right of way

___Roadway Widening/Turn Lanes on State Roads

- All inspections have been coordinated with NCDOT Inspector
- Traffic control installed per approved construction plans

PAVING REQUIREMENTS:

___Notify Town Inspector 48 hours prior to beginning any paving operation.

___Prior to final lift of asphalt, call Town Inspector to schedule inspection for curb and gutter and existing asphalt repair needs.

___ Density meets NCDOT requirements. The contractor shall perform quality control on asphalt by performing a minimum 5 random density tests per 2,000 LF. Superpave mixes are to be compacted 92.0% of the maximum specific gravity (90% for SF9.5A mixes) . Submit test results daily to the Town Inspector

___ Weather temperatures during paving meet minimum requirements (Follow latest edition of NCDOT Super Pave Manual:

TABLE 610-5 PLACEMENT TEMPERATURES FOR ASPHALT	
Asphalt Concrete Mix Type	**Minimum Surface and Air Temperature**
B25.0B, C	35°F
I19.0B, C, D	35°F
S4.75A, SF9.5A, S9.5B	40°F[A]
S9.5C, S12.5C	45°F[A]
S9.5D, S12.5D	50°F

A. For the final layer of surface mixes containing recycled asphalt shingles (RAS), the minimum surface and air temperature shall be 50°F.

MISC. REQUIREMENTS:

___Street lights- spacing not to exceed 250 feet

___Fire hydrants- spacing not to exceed 1,000 feet

STREET ACCEPTANCE

___Final inspection has been scheduled with Construction Site Inspector.

___ Punch list is voided after 60 calendar days (Final inch of pavement will be on punch list.)

___ Inspector has been notified of punch list completion.

___Final inspection approval received by Town Engineer

APPENDIX- D

POLICY FOR STREET IMPROVEMENTS AND MAINTENANCE

Adopted: May 9, 2006

Amended through: May 10, 2016

APPENDIX-D

POLICY FOR STREET IMPROVEMENTS AND MAINTENACE

CONTENTS

Section 1. Purpose

Section 2. Definitions

Section 3. Acceptance of Streets for Maintenance Purposes – General

Section 4. Conditions for accepting streets for maintenance purposes

Section 5. Minimum standards for accepting new streets for maintenance purposes

Section 6. Procedure for requesting streets to be accepted for maintenance purposes

Section 7. Street improvements – General

Section 8. Funding for street improvements

Section 9. Citizen participation in cost of improving streets proposed for acceptance by the Town to minimum standards

Section 10. Unauthorized street modifications and improvements prohibited

Section 11. Effective Date

POLICY FOR STREET IMPROVEMENTS AND MAINTENANCE

Section 1. Purpose

The purpose of this policy is to set forth regulations and standards for streets open to the public and maintained by the Town. Policy is herein established for:

A. Additions within the Town street system
B. Maintenance within the Town street system
C. Improvements within the Town streets system

Section 2. Definitions

A. Town Street means a street that has been accepted by the action of the Waxhaw Board of Commissioners for maintenance purposes.
B. DOT Street means a street or highway that has been accepted for maintenance by resolution of the governing board of the NC Department of Transportation.
C. DOT means the North Carolina Department of Transportation.
D. Engineer means the Town Engineer, or his designated agent or inspector.
E. Street shall mean roadway, shoulders, ditches, pipes, and structures lying within the right-of-way.
F. Board shall mean the Waxhaw Town Board of Commissioners.

Section 3. Acceptance of Streets for Maintenance Purposes - General

A. The Town will provide maintenance and improvements for Town Streets consistent with NCGS 160A-296 and 136-41.1 through 136-41.4 (the Powell Bill) and as described in this Policy as it deems proper. Maintenance may include but is not limited to patching and repaving, storm water, street shoulder, traffic signs and signals, and snow / ice removal.
B. The Town will not provide routine maintenance for DOT Streets except as provided for by interagency agreement (contract for service to DOT) as approved by the Board. However, the Town may provide services such as street name signs and street lighting that are not provided by DOT and that are provided on the Town streets.
C. The Town is not responsible for maintenance or improvements to any street that has not been formally accepted by the Town.

Section 4. Conditions for Accepting Streets for Maintenance Purposes

A. The Town may accept streets for maintenance by the Town upon either of the following:

i. Existing non-dedicated streets (no dedication from plat; not owned by a developer/builder): 1) a petition signed by the landowners holding title to one hundred percent (100%) of the property fronting the street and 2) a finding that the street meets standards for acceptance (each landowner must also execute proper documentation to dedicate a right of way as described in Section 6).

ii. Existing dedicated streets: (dedication from plat or other public dedication but no petition by the developer /owner): 1) a petition signed by the Town Engineer or a person with direct interest and 2) a finding that the street meets standards for acceptance.

iii. New streets: 1) a petition by the developer/owner of the streets and 2) a finding that the street meets standards for acceptance.

In the event a petition is insufficient, said petition may be presented to the Board for further consideration.

B. The Town will not accept any street where the street does not connect to an existing public street maintained by the Town or DOT.

Section 5. Minimum Standards for Accepting Streets for Maintenance Purposes

A. Streets made available for public shall comply with the requirements of the Town of Waxhaw Unified Development Ordinance prior to acceptance for maintenance by the Town.

B. Methods and materials of construction shall be based on engineering analysis including the Town's Engineering Standards and Procedures Manual (when implemented). Streets shall generally meet or exceed the following:

i. The sub-grade must contain a minimum twelve (12") inches compacted earth.

ii. The stone base must contain a minimum eight (8") inches compacted stone.

iii. The base course of asphalt must contain a minimum two (2") inches of SF9.5A asphalt.

iv. When each street has had sixty (60%) percent of the lots on that

street with certificate of occupancies issued a minimum one and one-half (1-1/2") inches of SF9.5A final surface course shall be applied.

v. All streets shall pass a proof roll test on the sub-grade and the stone base and shall be conducted by the Town of Waxhaw Staff with all applicable fees paid.

vi. Prior to the final surface course of asphalt the Town of Waxhaw Engineering Department shall conduct an inspection with the developer of the base course asphalt and repair any damages or failures to the streets.

C. Design and construction standards shall be in accordance with the Town of Waxhaw Unified Development Ordinance and the Town's Engineering Standards and Procedures Manual (when implemented).

D. Procedures and requirements for application, plan submittal, recording and dedication of right-of-way, and petitions for acceptance shall be in compliance Town of Waxhaw Unified Development Ordinance and the Town's Engineering Standards and Procedures Manual (when implemented).

E. In those instances where existing development or improvements prohibit the dedication of the required right-of-way, the Town Board may accept a less than standard width upon the recommendation of the Engineer.

F. In special circumstances involving existing streets, the Engineer may submit a petition to the Town Board to accept a street not meeting minimum standards.

Section 6. Procedure for Requesting Streets to be accepted for Maintenance Purposes

A. The Engineer shall, upon receipt of a proper petition, perform inspections to determine compliance with minimum standards and will inform the petitioners of compliance or deficiencies that must be corrected to gain compliance.

B. Upon inspection and verification of compliance with minimum standards, the Town will review recorded plats and/or surveys as necessary to define required right-of-way.

C. The petitioner will submit any additional right-of-way plats or documents as necessary for the dedication.

D. Upon confirmation of valid right-of-way documentation and upon compliance with minimum standards, the Engineer will submit the petition to the Board for approval.

E. In special circumstances involving existing streets not meeting minimum standards, the Engineer may submit a petition to the Board. The Engineer must describe the special circumstances supporting acceptance, the deficiencies / condition of the street, and an estimate of any repair or upfit costs.

Section 7. Street Improvements - General

Improvements to Town streets will be considered in accordance with this Policy. Improvements to DOT streets will be in accordance with DOT regulations and policies and will not be accomplished by the Town. No improvements will be completed by the Town on streets not formally accepted for maintenance by the Town.

Section 8. Funding for Street Improvements

A. The Board shall establish a street improvements revolving fund and will annually appropriate revenues for street improvements, including designated funds from the Powell Bill.

B. The Board may approve projects to be completed with special funds such as through the Community Development Block Grant Program or through budgeted funds.

Section 9. Citizen Participation in Cost of Improving Streets Proposed for Acceptance by the Town to Minumum Standards

When requested by the Board, the Engineer shall prepare an estimate of the cost of planning, survey, design, and construction required to improve a segment of street to minimum standards for maintenance by the Town.

Upon receipt of the estimate, the Board of Commissioners may inform the petitioners of the amount to be paid by the petitioners. The amount will be a portion or percentage of the total estimate as established by the Board. Upon receipt of petitioners' payments, and any other required documentation for proper dedication, the Engineer will recommend acceptance of the street for the Town maintenance.

Section 10. Unauthorized Street Modification and Improvements Prohibited

No modifications to a Town street will be permitted except as approved in writing by the Board.

Improvements shall be constructed by the Town or by a qualified contractor approved by the Town.

Unauthorized improvements may be removed or modified by the Town and costs for removal or modification may be charged to the person making the unauthorized improvements.

Section 11. Effective Date

The effective date of this amended policy shall be the10th day of May, 2016.

PETITION FOR STREET IMPROVEMENT
TOWN OF WAXHAW, NORTH CAROLINA

We, the undersigned hereby request that improvements to public streets, to be completed as described below. We hereby agree to pay fees to the Town for the improvements in accordance with the Town Policy for Street Improvements and Maintenance.

Improvement Requested:

Paving: _____

_____

Street name – beginning and ending point

Driveway Pipe: _____

_____

Street address, length desired

Storm water System: _____

_____

Describe location of pipe desired

Curb and Gutter: _____

_____

Describe location of curb and gutter desired

Petitioners Signature	Address	Date

TOWN OF WAXHAW
PETITION FOR ADDITION OF PUBLIC STREETS
TO THE SYSTEM OF
THE TOWN OF WAXHAW, NORTH CAROLINA
(Existing Streets)

We, the undersigned, being all, the property owners having an interest in the streets described below do hereby request that the Town of Waxhaw accept said streets for public use and maintenance. We hereby agree to dedicate to the Town of Waxhaw a permanent right-of-way as required by the Town, including sight triangles and drainage easements for the installation and maintenance of streets and other public utilities.

Street Name	To	From	Approximate Length (in ft.)
1.			
2.			
3.			
4.			
5.			

(Attach additional sheets if necessary)

Petitioners:

Name	Address	Date

Accepted by motion of the Town of Waxhaw Board of Commissioners on _____day of _____, 20__.

_____ _____
Mayor Date

TOWN OF WAXHAW
PETITION FOR ADDITION OF PUBLIC STREETS
TO THE SYSTEM OF
THE TOWN OF WAXHAW, NORTH CAROLINA
(Developers / Builders)

I hereby certify, as the owner, that to the best of my knowledge the improvements in the _____ subdivision have been constructed in accordance with the preliminary plan and are shown on a record map filed in the Union County Register of Deeds Office. All work conforms to the construction standards of the Town of Waxhaw Unified development Ordinance and the Town of Waxhaw Policy for Street Improvements and Maintenance.

I, therefore, request that the Town of Waxhaw consider the following streets in the _____ _____ subdivision for maintenance purposes. I understand that the acceptance of said street shall be made only by the Town of Waxhaw Board of Commissioners in accordance with the Town's policy for Street Improvements and Maintenance.

Street Name	To	From	Approximate Length (in ft.)
1.			
2.			
3.			
4.			
5.			
6.			
7.			
8.			
9.			
10.			

(Attach additional sheets if necessary)

_____ _____
Owner Name Date

_____ _____
Address Phone Number

Accepted by motion of the Town of Waxhaw Board of Commissioners on _____day of _____, 20__.

_____ _____
Mayor Date

APPENDIX-E

STREET LIGHTING POLICY

Section 1. Purpose

The purpose of this Policy is to establish standards for the installation and maintenance of street lighting within the Town of Waxhaw, North Carolina. All street lighting will be installed and maintained by Duke Power Company or Union Power Cooperative.

Prior to any installation or acceptance of a streetlight located within the corporate town limits of Waxhaw, the following criteria in the Street Lighting Policy must be met:

Section 2. Installation Standards for Street Lighting of Existing Streets

A. Street lighting for residential and collector streets will be, as required by the Director of Public Services, either decorative in nature or consistent with existing lighting fixtures within the area, with a minimum rating of 9500 lumen, and shall be 100 watt, high pressure sodium or metal halide fixtures. Lighting fixtures shall be located at all intersections and mid-block locations with spacing of fixtures not to exceed 250 feet.

B. Light fixtures on public right-of-way for the purpose of illuminating the roadway ordered by private citizens will not be permitted.

C. A letter of recommendation for the installation of additional lights on existing streets must be made to the Town Manager by the Public Services Director.

Section 3. Individual Requests for Street Lighting of Existing Streets

A. Any requests for street lighting may be submitted to the office of the Director of Public Services. Each request will be considered in accordance with approved standards and any special conditions of merit such as pedestrian activity, traffic values, accident history, crime rate, vertical and horizontal street

alignment and hazardous traffic conditions. All costs associated with the installation of streetlights (including installation and materials) will be the responsibility of the residents and/or the homeowners association. Once lights are installed and accepted by the Town of Waxhaw, the monthly service costs will be paid by the Town.

B. The Town of Waxhaw will not be responsible for any lighting fixtures that have been installed for the purpose of illuminating private property.

C. The Town of Waxhaw will not accept lighting fixtures for dedication until all street lighting is installed and paid for in full to allow lighting at the lowest municipal rate. A letter of certification from the service provider noting full payment by the property owner, developer and/or the homeowner's association will be required prior to acceptance consideration.

Section 4. Requirements for Installation Approval and Town Acceptance of New Residential Subdivisions

Prior to any installation or acceptance of a streetlight located within a subdivision in the corporate town limits of Waxhaw, the following criteria must be met:

A. A Request for Streetlight Installation Form must be submitted to the Waxhaw Town Hall for distribution to and review by a committee consisting of the Public Services Director, the Director of Planning, Zoning and Engineering and any other staff deemed by the Town Manager. This form must be accompanied by the following documents:

1. Copies of any and all contracts entered into by the property developer and the appropriate power service provider (Duke Energy and/or Union Power). This contract must include the description of the lights to be installed with all specifications of the proposed lights; (i.e.: style of light; lumens and the wattages associated with the same) installation and materials costs per light and the monthly service cost per light. The Town of Waxhaw will not consider acceptance of any lights that will be billed at any rate other than the standard municipal rate. In addition, the Town of Waxhaw will not consider any dedication acceptance request until all costs associated with the lights and their installation has been paid in full by the developer and/or the HOA.

2. A lighting plan for the noted subdivision shall be prepared by a qualified lighting designer at the expense of the property developer and submitted to the Town of Waxhaw Planning, Zoning and Engineering Department.

3. Request package must include a detailed map of the subdivision noting the location of each streetlight within the subdivision. In addition, all data must be submitted in electronic format to be compatible with ARC-GIS 9.3 or greater to include shape files or geodata base.

4. Proposed street light installation project must meet all standards for residential subdivision lighting as described in Section 5 of the document.

Section 5. Installation Standards for Residential Subdivision Lighting

For approval of any residential subdivision, all public streets, sidewalks, greenways and other common areas or facilities in subdivisions shall be sufficiently illuminated to ensure the security of property and the safety of persons using such streets, sidewalks, and other common areas or facilities. Standards for residential subdivision lighting for the purposes of this article shall be follows:

A. Streetlights shall be rated a minimum of 9500 lumen, and shall not exceed a maximum of 100 watt for high pressure sodium vapor or metal halide fixtures. Lights shall be located at all intersections and mid-block locations with spacing of fixtures not to exceed 250 feet. (As measured along the street centerline)

B. All roads, driveways, sidewalks, parking lots, greenways and other common areas and facilities in un-subdivided developments shall be sufficiently illuminated to ensure the security of property and the safety of persons using such roads, driveways, sidewalks, parking lots, and other common areas and facilities.

C. All entrances and exits of substantial buildings used for non-residential purposes and in multi-family residential dwellings containing more than four dwelling units shall be adequately lighted to ensure the safety of persons and the security of the building.

D. Streetlights, poles and brackets are to be decorative and shall be subject to approval in the preliminary plat. Street light fixtures shall be the same throughout the subdivision or individual phases of the subdivision.

E. All streetlights shall be placed at least two (2) feet inward (i.e., away from the street) from the sidewalk.

F. Upon the approval of plans and prior to construction, the developer shall pay the electric provider for all costs associated with the installation of the streetlights. The Town will not accept streets for dedication until all street lighting is installed and paid for in full to allow lighting at the lowest municipal rate. A letter of certification from the service provider noting full payment by the property developer and/or the homeowner's association will be required prior to acceptance consideration.

Section 6. Acceptance of Dedication

Upon completion of the installation of approved streetlight, the property developer shall submit to the Town of Waxhaw a letter requesting that the town consider the dedication acceptance of the streetlights. This letter must detail the names of each street, its length and the number of streetlights on the noted street. This request must be submitted in conjunction with the request to accept the streets and sidewalks located in the subdivision. (Guidelines for the acceptance of streets and sidewalks are contained within the Town of Waxhaw Ordinances related to each.) Acceptance of these assets must be done in one action and are not subject to review until all three are eligible for acceptance. This letter of request shall be reviewed by town staff and a recommendation to the Town Manager and Board of Commissioners shall be issued.

The effective date of the original Policy is October 1, 1997.
The effective date of this amended Policy is August 13, 2019.

APPENDIX-F

TIA Memorandum of Understanding

Date: _____

Project Information
Project Name:_____
Project Location: _____
Project Owner: _____

Applicant Information
Applicant Name: _____
Applicant Telephone: _____
Applicant Email: _____

Application Request: _____
(eg. Rezoning, preliminary or final plat, special use permit, site plan, etc.)

Existing
Existing Zoning: _____
Existing Land Use: _____
Parcel Size: _____

Proposed Development
Proposed Zoning: _____
Proposed Land Use: _____
Proposed Size/Density: _____
Proposed Build-Out Year: _____

Scenarios to be Analyzed:
☐ _____ Existing Conditions
☐ _____ Background conditions
☐ _____ Build conditions
☐ _____ Build conditions + 5 years
☐ Other: _____

Background Growth Rate: _____%
Peak Hours: ☐ 6:30–8:30 AM, 4:30–7:00 PM ☐ Other _____

Approved Developments: (Name of Development, Location, Land Use, Density, TIS information if applicable):

Town Projects in the Comprehensive Plan: (Name of Project, Location, Improvements, Year Complete)

Funded TIP/CIP projects: (Name of Project, Location, Improvements, Year Complete)

Trip Generation Table:

Proposed Access:

Intersections to be Studied:

Intersection		Type of Analysis	
		Signalized	Unsignalized
1.		☐	☐
2.		☐	☐
3.		☐	☐
4.		☐	☐
5.		☐	☐
6.		☐	☐
7.		☐	☐
8.		☐	☐
9.		☐	☐
10.		☐	☐

☐ Other Considerations **(i.e. pedestrian, transit, other scenarios)**

☐ Traffic Signal Warrants: _____

☐ Crash Analysis Required: _____

☐ Additional Traffic analysis (i.e. Synchro, VISSIM, SIDRA, etc.): _____

Agreement by all Parties
The undersigned agree to the contents and methodology described in this Memorandum of Understanding (MOU) for completing the required TIA supportive of the development application identified herein. Any changes to the above methodology contemplated by the applicant or transportation consultant must be submitted to the Town in writing and a revised MOU executed before such changes will be accepted for the TIA report. Any additional services incurred by the transportation consultant in addition to the MOU must be approved by the Town, and processed between the applicant and the transportation consultant.

_____
(Applicant & Date)

_____
(Transportation Consultant & Date)

Approved by: _____
(Town Engineer & Date)

NCDOT Involvement Needed? ☐ Yes ☐ No If Yes, contact NCDOT at 704-596-6900 for requirements.

NCDOT Required Scoping

_____
(NCDOT & Date, if Applicable)

Attachments:

1. Location Map
2. Site plan
3. Proposed Trip Distribution

APPENDIX-G

TIA Policy

Approved January 12, 2016

1. Definition and Purpose – A Traffic Impact Analysis (TIA) is a tool used to evaluate the incremental impacts that development, redevelopment and/or change of development use may have on the surrounding transportation system which helps local decision makers evaluate whether a development is appropriate for a site, or identify certain mitigation measures that are necessary to maintain the integrity of the transportation network.

2. Responsibility for TIA – After a completed development application has been filed, and upon initial submittal of a site or sketch plan, the Town shall determine the need for a TIA. If warranted, the transportation consultant assigned by the Town shall prepare the TIA. At the discretion of the North Carolina Department of Transportation (NCDOT) and the Town, a Transportation Technical Memorandum (TTM), in lieu of a full TIA report, may be allowed for some developments. If proposed street connections are not consistent with adopted plans, Town policies, or professional standards, then an explanation or proposed transportation mitigation alternative that is equal or better should be discussed in the study. The North Carolina Department of Transportation (NCDOT) and the Town will be responsible for determining whether the alternative mitigation plan meets and/or exceeds the performance standards of the proposed street connections in the adopted plans and policies. The TIA review schedule will be determined as agreed to on the Town's TIA scoping requirements, generally based on the number of study intersections.

3. Minimum Thresholds for TIAs – A TIA will be **required** to accompany a site/sketch plan when expected gross trip generation is ***1000 total trips or more both entering and exiting the site in a 24-hour period, and/or 100 total trips both entering and exiting the site during either the AM or PM peak (prior to any trip reductions are applied). The gross trip generation will be calculated by the Town based on information provided by the applicant and the final determination for requiring the TIA will be by the Town.*** In the event that a site does not generate 1000 total trips both entering and exiting a site in a 24 hour period, and/or 100 total trips both entering and exiting the site during the AM or PM peak, a TIA may still be required for any site or sketch plan if the subject development reduces an intersection's level-of-service (LOS), and/or poses a potential safety challenge to the public or as otherwise set forth herein. The latest version of the Institute of Transportation Engineers (ITE) Trip Generation Manual shall be used to determine the expected gross traffic volumes a specific site and/or a specific use will generate. The Town may also determine the need for a TIA based on special circumstances associated with the development, and may determine that a TIA is still necessary even if the gross trips fall below this threshold. This may be due to public safety concerns, sight distance, existing congestion issues within the

vicinity of the site, or the nature of the use. The Town may also require a TIA and/or Transportation Technical Memorandum (TTM) in any of the following scenarios:

a. Traffic generated from a non-residential development that could potentially significantly impact adjacent residential neighborhoods

b. Traffic operation problems for current and/or future years on nearby streets are expected to be significantly aggravated by traffic generated from the proposed new development

c. Major and minor thoroughfares near the site are experiencing noticeable delays

d. Traffic safety issues exist at the intersection or street that would serve the proposed new development

e. The proposed land use differs significantly from the adopted Land Use Plan for the Town

f. The internal street or access system is not anticipated to accommodate the expected traffic generation

g. The proposed development project includes a drive through facility, or other uses such as schools that require significant on site circulation that may have an off-site impact to adjoining roads and/or intersections

h. The amount and/or character of traffic is significantly different from a previously approved TIA, or more than 24 months have passed since completion of the previous TIA.

4. Scoping Meeting – A mandatory scoping meeting is required prior to beginning the TIA to discuss the requirements and strategies for a TIA specific to the site and the proposed development. Background information shall be submitted by the applicant five or more business days prior to the scoping meeting and shall include a conceptual site plan showing proposed access points, proposed land use and densities, structure and parking envelopes. The Town, the transportation consultant assigned by the Town, and the applicant(s) are required to attend the mandatory scoping meeting and the NCDOT district staff will be invited and encouraged to attend if access to a state road is involved. The applicant may invite members of his/her development team as needed.

5. Memorandum of Understanding (MOU) – An MOU shall be prepared by the transportation consultant assigned by the Town documenting the understood scope of the project. The MOU shall be signed by the applicant, the Town**,** and the NCDOT District Engineer if access to a state road is involved before the consultant can begin work on the TIA. Failure by the applicant to provide accurate information or failure by the assigned transportation consultant to follow the MOU shall result in disapproval of the TIA. If significant changes are made to the scoping parameters documented in the MOU, a revised MOU will be required.

6. Fees – After the scoping meeting, the transportation consultant assigned by the Town shall submit a summary of consultant fees for preparing the TIA to the Town. Per the MOU, the applicant(s) shall agree to provide payment in full to the Town for

preparation of the TIA so that the Town can release the work to the consultant. The Town may require all or a portion of the estimated fees to be paid to the Town prior to commencement of the work. Any additional services incurred by the transportation consultant in addition to the MOU must be approved by the Town, and agreed to and paid for by the applicant, prior to performance of the additional work.

7. Transportation Mitigation Agreement (TMA) – Upon completion of the TIA, certain on or off-site transportation mitigation measures may be required as recommended by the TIA. If so, the transportation consultant assigned by the Town shall prepare a Transportation Mitigation Agreement (TMA) which will summarize the following:

   a. Development plan

   b. Phasing and timing of development (if applicable)

   c. Site access and points of ingress/egress

   d. On and off-site improvements required to adequately mitigate the project impacts to the Town's transportation system, including vehicular, pedestrian, and bicycle improvements.

   e. Trigger points and deadlines for construction of any improvements.

   The TMA must be signed by the applicant, Town and the NCDOT District or Division Engineer if the mitigation involves a state roadway. All required mitigation measures must be implemented prior to final Certificate of Occupancy (CO), or the applicant(s) shall provide a cost estimate to the Town for review, and provide a payment in lieu for said measures prior to CO.

8. TIA Outline and Contents – The outline and contents of what is required to be included in the TIA will be discussed at the scoping meeting and included in the Memorandum of Understanding (MOU). A detailed summary of the expected content and methodologies to be used in the TIA are discussed below.

   a. Cover/Signature page – Includes the project name, location, name of the applicant, contact information for the applicant, and date of the study. The name, contact information, registration number, signature, and seal of a duly qualified and registered professional engineer in the State of North Carolina are also required to appear on this page.

   b. Table of Contents – Includes a list of all section headings, figures, tables, and appendices included in the TIA report. Page numbers shall denote the location of all information, excluding appendices, in the TIA report.

   c. Executive Summary – Includes a description of the study findings, a general description of the project scope, study horizon years, probable transportation impacts of the project, and mitigation measure recommendations. Technical publications, calculations, documentation, data reporting, and detailed design should not be included in this section.

   d. Project Description – Includes a detailed description of the development, including the size of the parcel, development size, existing and proposed uses for the site,

anticipated completion dates (including phasing). Should also include the square footage of each use and/or the number and size of dwelling units proposed, and should also include a map and copy of the site plan provided by the applicant(s).

e. Site Description – Includes a description of the project location within the Town and region, existing zoning and use (and proposed use if applicable), and key physical characteristics of the site, including general terrain and environmentally sensitive or protected areas.

f. Site Access – Includes a complete description of the ingress/egress of the site should be explained and depicted. It should include number of driveways, their locations, distances between driveways and intersections, access control (full-movement, leftover, right-in/right-out, etc.) types of driveways (two-way, one-way, etc.), traffic controls, etc. Internal streets (lanes, flow, and queuing), parking lots, sidewalks and bicycle lanes, and designated loading/unloading areas should also be described. Similar information for adjacent properties, including topographic grade relationship, should be provided to evaluate opportunities for internal connections. The design, number, and location of access points to collector and arterial roadways immediately adjacent to the site must be fully analyzed. The number of access points should be kept to a minimum and designed to be consistent with the type of roadway facility. Driveways serving the site from state roads should be designed in accordance with the NCDOT's Policy on Street and Driveway Access, and/or the Town standards, as applicable.

g. Study Area – The limits of the study area shall be based on the location, size and extent of the proposed project, and an understanding of existing and future land uses and traffic conditions surrounding the site. The limits of the study area for the TIA shall be reviewed and approved by the Town and NCDOT staff at the mandatory scoping meeting. At a minimum, the study area should include all streets and signalized intersections within a 1-mile radius of the proposed site and/or where site traffic estimated for build-out of the project will constitute 10% or more of any signalized intersection approach during the peak hour. Unsignalized intersections between the required signalized intersections will be added to the scope as directed by the Town. To initially determine the impacts, the Town will maintain a database of recent peak-hour intersection turning-movement counts. The applicable intersection counts will be equated to current year baseline volumes. Based on the proposed development program submitted by the applicant, a preliminary trip generation analysis, distribution and assignment will be performed within the area surrounding the site and compared to the current year base volumes. Due to related impacts or current operational problems, town staff and/or NCDOT staff may require other intersections be included in the study area. A narrative describing the study area should identify the location of the proposed project in relation to the existing transportation system and list the specific study intersections and/or segments. Any unique transportation plans or policies applicable to the area (e.g., CATS bus service and future plans) should be mentioned. A site location map shall be provided and should identify natural features, major and minor roadways within the study area, study intersections, and a boundary of the site under consideration.

h. Existing Conditions – Shall include a narrative and map that represents AM and PM peak-hour turning-movement volumes for all intersections within the study area. Traffic volumes shall be 15-minute interval weekday turning-movement counts (Tuesday through Thursday) and no more than twelve months old. The required count timeframes are from 6:30-8:30 a.m. and 4:30-7:00 p.m.; however, site-specific conditions may necessitate additional or different traffic counting hours and/or days depending on the development program and location within the Town (these unique circumstances will be determined and directed by the Town). For example, 12-hour turning movement counts shall be required to complete the analysis if a traffic signal warrant analysis is required as part of the TIA. The Town will determine if additional peak hours or weekend analyses shall be included in the TIA at the mandatory scoping meeting. For example, if the development is nearby a school that significantly alters traffic volumes at times other than the peak hours described above, additional study hours will be required. Traffic volumes should also represent weeks that have no observed federal, state, or local holidays and periods of the year when local schools are in session. The source of existing traffic volume information should be explicitly stated (e.g., Town counts, new counts collected by the applicant, NCDOT counts, etc.). If previous counts were obtained, only counts collected within the one year of the Scoping Meeting will be deemed acceptable. Summary sheets for existing turning movement counts should be included in the appendix of the TIA report. A separate narrative and map shall be prepared to describe the characteristics of surrounding major roadways, including functional classification, number of lanes, posted speed limit, existing average daily traffic volumes, typical cross section, intersection control, and lineal distance between major roadways. Field notes for the existing conditions investigation may be included in the appendix of the TIA report.

i. Future Year Conditions – Unless otherwise approved by the Town, future year conditions for a single-phase development shall be analyzed for the year the development is expected to be at full occupancy (build-out year) and five years after the build-out year (build-out + 5). For multiple-phased development, the scenarios should be completed in order, with any improvements specified by development included in the subsequent build scenarios, including five years after the full build-out year (build-out + 5). Specific analysis periods to include in the study shall depend greatly upon the development program, proposed project phasing plan, and significant improvements programmed for the surrounding transportation system. The approved offsite developments and transportation projects to be included in the base future-year background conditions for the transportation system within the study area shall be determined during the scoping meeting. Transportation improvements assumed in the future-year background conditions analysis may include those with an expected completion date concurrent with that of the development and funded through either by the Town of Waxhaw, State of North Carolina Transportation Improvement Program, or indicated as a required condition of approval from another nearby development application. Only projects approved by the Town at the scoping meeting may be included in the analysis as future existing infrastructure. Those improvements committed by other projects must be clearly identified in the report as approved offsite development

road improvements. Adjacent development traffic information used in the development of the future year background traffic volumes should be included in the appendix of the TIA report. Unfunded, planned infrastructure projects may be mentioned in the TIA, but the description should specifically identify that these projects are not included in the background condition. Future year background traffic volumes shall be forecasted using historical growth rate information, regional models, and/or TIA reports for development approved by the Town but not yet built. A narrative and map shall be prepared that presents turning movement volumes for each peak hour for all intersections identified within the study area. Future year base traffic volumes, other development volumes, and site traffic volumes should be clearly separated, and combined in the map.

j. Trip Generation – Base trip generation for the proposed land use(s) should be calculated using data published in the latest version of the Institute of Transportation Engineers' (ITE) Trip Generation Manual. Data limitations, data age, choice of peak hour of adjacent street traffic, choice of independent variable, and choice of average rate versus equation shall be discussed at the mandatory scoping meeting. Local trip generation rates may be acceptable if appropriate validation is provided by the applicant to support them. Any deviation from ITE trip generation rates shall be discussed in the mandatory scoping meeting and documented in the MOU if approved by the Town and NCDOT. The NCDOT Municipal School Transportation Assistance (MSTA) calculator should be used to calculate projected trip generations for school sites.

- Internal Capture – Base trip generation may be reduced by rate of internal capture when two or more land uses are proposed using methodology recommended in the most current Trip Generation Handbook published by the Institute of Transportation Engineers. Reductions for internal capture should be applied to multi- or mixed-use sites only, and reductions greater than 10% in any peak hour require consultation and acceptance by the Town and NCDOT. The internal capture reduction should be applied before pass-by trips are calculated.

- Pass-by Trips – Pass-by trips are those made as intermediate trips between an origin and primary destination (i.e., home to work, home to shopping, etc.). However, pass-by trips are not diverted from another roadway. Base trip generation may be reduced by rate of pass-by capture using methodology recommended in the most current Trip Generation Handbook published by the Institute of Transportation Engineers. Pass-by trips associated with the development program may not exceed 10% of the existing peak-hour volume reported for the adjacent public street network. This network shall include the streets that provide primary access to/from the site. For example, a site access drive that connects to a low-volume local street, which its primary access is to a major collector road, the traffic on the major collector shall be used as the adjacent street for pass-by calculation purposes. Evaluation of diverted trips may apply depending on the specifics of each site. A trip generation table shall summarize all trip generation calculations for the project.

k. Trip Distribution – External trip distribution shall be determined on a project-by-project basis using one of several sources of information available to transportation and land planning professionals. Potential sources for determining project trip distribution may include the regional travel demand model, market analysis, existing traffic patterns, or professional judgment. At the Town's direction, multiple trip distributions may be required for differing land use types. Regardless of methodology, the procedures followed and logic for estimating trip distribution percentages must be well-documented in the TIA. Trip distribution percentages proposed for the surrounding transportation network should be discussed during the scoping meeting and shall be approved by the Town and NCDOT before proceeding with the TIA. A map showing the percentage of site traffic on each street included in the study area should be included in the TIA.

l. Trip Assignment – Project traffic shall be distributed to the surrounding transportation system based on the site's trip generation estimates and trip distribution percentages. Future year build-out traffic forecasts (i.e., future year background traffic plus project traffic) shall be represented in graphic formats for AM and PM peak-hour conditions at all intersections included in the study area. If the project will be built in phases, traffic assignments shall be reported for each phase. Pass-by traffic shall be included at the driveways and access points for evaluating driveway volumes. Multiple assignment analyses may be required if the traffic control at the access drives varies (i.e., right-in/right-out vs. stop controlled vs. signalized).

m. Capacity Analysis – Level-of-Service (LOS) and delay are the primary measures of effectiveness for impacts to the transportation system, and is defined by the most current edition of the Highway Capacity Manual (HCM). Unless otherwise noted, Synchro LOS and delay shall be reported for all signalized intersections and approaches identified in the study area. Based on HCM, LOS for unsignalized intersections is not defined as a whole; instead, only the individual stop-controlled or yield approaches should be reported based on the HCM reports determined through the Synchro analysis. Existing signalized intersections shall be modeled based on existing signal timing plans provided by either the Town or NCDOT. Existing signal timing plans should be included in the appendix of the TIA report. If a traffic signal is part of a coordinated system it must be analyzed as such under all conditions. Other standard practices and default input values for evaluating signalized intersections should be consistent with the most recent guidelines published by the NCDOT, Traffic Engineering and Safety Systems Branch, Congestion Management Unit ("Capacity Analysis Guidelines"). The Town may also require safety, traffic simulation, gap and/or other analyses appropriate for evaluating a development application. Additional analyses and/or traffic capacity or simulation tools (such as VISSIM) required for the TIA shall be identified during the scoping meeting. Capacity calculations should be included for the existing and all future year scenarios, as described in Section 7.i. Impacts from the proposed project shall be measured by comparing the future year background conditions to the future year build-out conditions. Requirements for mitigation are described in Section 7.q. All TIA reports submitted to the Town shall use SYNCHRO, SimTraffic or VISSIM analysis software for signalized and unsignalized

intersections, or Sidra Software, for roundabouts, consistent with policies released by the NCDOT. A narrative, table, and map shall be prepared that summarizes the methodology and measured conditions at the intersections reported in LOS (LOS A – F), intersection and approach signal delay for signalized intersections, approach delay for unsignalized intersections, and 95th percentile queue lengths for all movements. Capacity analysis worksheets and auxiliary turn lane warrants for unsignalized intersections should be included in the appendix of the TIA report.

n. Queuing Analysis – 95th percentile and simulation analysis of future year queues shall be consistent with NCDOT's Traffic Engineering and Safety Systems Branch, Congestion Management Unit current practices and published Capacity Analysis Guidelines. Turn lanes and storage lengths for the major street (uncontrolled) approaches at unsignalized intersections shall be identified using volume thresholds published in the NCDOT's Policy on Street and Driveway Access to North Carolina Highways (see Warrant for Left- and Right-Turn Lanes Nomograph, pg. 80). Recommendations for left and right turn lanes serving the site shall be designed to both account for the NCDOT warrants described above and to meet future year capacity needs identified in the TIA report. For projects that include drive-through facilities, pick-up/drop-off areas or entrance gates, a queuing analysis may be required by the Town to ensure that vehicle stacking will not adversely impact the public transportation system. The queuing analysis must be performed using accepted transportation engineering procedures approved by the Town. If a TIA is required for a new school site, the internal circulation and ingress/egress of the site should be modeled using a "dummy signal" in the SYNCHRO software as prescribed by NCDOT Municipal School Transportation Assistance (MSTA) department.

o. Crash Analysis – A summary of crash data (type, number, and severity) for the most recent 3-year period at each study location is required. Traffic Engineering Accident Analysis System reports will be provided by the Town and/or NCDOT and should be included in the appendix of the TIA report. For locations with prevalent crash types and/or frequency, a discussion shall be included describing factors that may be contributing to the incidents. At a minimum, the proposed development features shall not contribute to factors potentially involved in collision rates. If contributing factors are identified, recommendations to eliminate or mitigate these features shall be included.

p. Traffic Signal Warrants – Town staff and NCDOT may consider potential signal locations at the scoping meeting. However, traffic flow progression is of paramount importance when considering a new traffic signal location. A new traffic signal should not cause an undesirable delay to the surrounding transportation system. Installation of a traffic signal at a new location shall be based on the application of warrants criteria contained in the most current edition of the Manual on Uniform Traffic Control Devices (MUTCD) and engineering judgment. Traffic signal warrants should be included in the appendix of the TIA report. Additionally, spacing of traffic signals within the Town must adhere to NCDOT requirements. Pedestrian movements must be considered in the evaluation and adequate pedestrian clearance provided in the signal cycle split assumptions. If a signal

warrant analysis is recommended in the TIA, the Town and/or NCDOT may decide to defer a signal warrant analysis until after the development has opened in order to use actual turning movement counts at an intersection. The TIA recommendations must clearly state that this analysis shall occur at a specified date following the opening of the development. The applicant must issue a bond or letter of credit in the name of the Town for the estimated cost of the signal warrant analysis and resulting signal prior to final approval of the TIA. The cost shall be established based on an engineer's estimate provided by the engineer of record for the applicant; however, final approval of the dollar amount rests with the Town.

q. Mitigation Measure Recommendations – This section of the TIA report shall provide a description of the study's findings regarding impacts of the proposed project on the existing and future transportation system and describe the location, nature, and extent of all mitigation measures recommended to the applicant to improve and/or maintain the future year background conditions level-of-service (LOS) conditions through phasing and ultimate build-out of the project. This mitigation will be based on the build-out year scenario. The applicant is only required to mitigate transportation deficiencies caused by the projected impact of their proposed development, and not unacceptable background conditions or other deficiencies caused by offsite development within the defined study area.

The applicant shall be required to identify mitigation improvements to the roadway network if at least one of the following conditions exists when comparing future year background conditions to future year build-out conditions:

- the total average delay at an intersection or individual approach increases by 25% or greater, while maintaining the same LOS,
- the LOS degrades by at least one level,
- or the LOS is "D" or worse in background conditions and the proposed project shows a negative impact on the intersection or approach

If the background LOS (intersection or approach) is inadequate (i.e., "D", "E" or "F", the applicant will be expected to mitigate only the impact caused by the proposed project. For example if the background LOS of an approach is LOS F with 85 seconds of delay, and the project traffic increases the delay to 95 seconds (LOS F), the applicant will be required to mitigate the added 10 seconds of delay on the approach, not required to mitigate the inadequate background delay. Town staff and NCDOT will review the recommendations in the final version of the TIA and will have the ultimate determination in the scope of the required mitigation measures.

For multi-phase developments, the capacity analyses scenarios shall address the phasing of improvements for each phase of development. The build-out + 5 scenario will only require the analysis of five years beyond the full build-out year, but not used for mitigation purposes.

A narrative and table shall be prepared that summarizes the methodology and measured conditions at the intersections reported in LOS (LOS A–F) and average control delay for each intersection and approach.

A narrative and map shall also be prepared that describes and illustrates recommended improvements, by development phase if necessary, for mitigating the projected impact of the proposed development.

r. Compliance with Adopted Transportation Plans – All TIA reports must include a statement of compliance with plans, programs, and policies adopted by the Town of Waxhaw for maintaining a safe and efficient multi-modal transportation system.

APPENDIX-H

POLICY FOR DRIVEWAY DESIGN & CONSTRUCTION

August 2019

Table of Contents

1 – INTRODUCTION 3
1.1 Purpose & Applicability 3
1.2 Objectives of this Manual 3
2 – PROCESS, PROCEDURES, APPROVALS 3
2.1 General Requirements 3
2.2 Town Requirements for Driveways 4
2.3 Submittal Requirements 5
3 – DRIVEWAY DESIGN CRITERIA 6
3.1 General Criteria 6
3.2 Standard Driveway Types 6
4 – DRIVEWAY LOCATION & SEPARATION REQUIREMENTS 9
4.1 Driveway Placement 9
5 –TURN LANE WARRANTS & DESIGN 11
6 – TRAFFIC IMPACT ANALYSIS (TIA) 14
7 – PAVEMENT MARKINGS & SIGNAGE 15
8 – TRAFFIC CONTROL DEVICES 15
9 – PUBLIC, PRIVATE, & CHARTER SCHOOLS 15

1 – INTRODUCTION

1.1 Purpose & Applicability

The primary purpose of the Town of Waxhaw's Driveway Design & Construction Policy is to provide minimum driveway design standards to individuals that are engaged in the design, permitting, and construction of private land development projects. Town staff will use this policy as the primary guidance document to support a property owner's rights of reasonable access to their site.

The driveway policy is intended to be used for, but not limited to; residential, industrial, mixed-use, and commercial site access to the public right-of-way. This document is also intended to be used in concert with other regulatory documents that have an influence for site access such as *The North Carolina Department of Transportation's Policy on Access & Design*, the *Town of Waxhaw's Unified Development Ordinance*, *Subdivision Regulations*, and the *Town of Waxhaw's Engineering Design & Construction Standards Procedures Manual*.

From a procedural perspective, Town Staff will administer the regulations and guidance set forth in this policy document for all of the land development activities occurring within the Town Limits of Waxhaw that include, but may not be limited to:

- Commercial Site Plan Review
- Subdivision Plan Review
- Conditional Rezoning Process

1.2 Objectives of this Manual

The objectives of the Driveway Manual are identified below;

1. Provide minimum driveway design and access management requirements and guidance to private landowners and/or developers that seek access to the public street

2. Create a tool that allows for the consistent administration of the driveway requirements and policies that govern access to the public street system

2 – PROCESS, PROCEDURES, APPROVALS

2.1 General Requirements

A property owner, developer, and/or public entity that seeks access to the public right-of-way can do so via Town Development Services commercial and subdivision commercial permitting processes. It is important to note that the approval of the development plan (commercial or subdivision) provides approval of each of the driveways/street connections proposed as a part of the subject development plan. This means that no separate driveway permit approval document will be issued as a part of the aforementioned land development plan approval(s) <u>with the following exceptions</u>. Individuals seeking new driveways to existing properties that are not being developed will need to follow the procedures for obtaining a driveway permit as outlined in the Driveway Permit application in Appendix I. Additionally, the developer/design professional will

need to obtain a physical driveway permit from the North Carolina Department of Transportation's District 3 Office (704-218-5100) when any of the previously mentioned access points connect to a public street maintained by the North Carolina Department of Transportation (NCDOT).

2.2 Town Requirements for Driveways

Expiration of Permit

Construction of a driveway must be completed within one year after the issuance of a driveway permit. An extension may be granted upon showing that valid reasons exist for the delay. A request for an extension must be submitted to the Town Engineer and/or designee in writing at least thirty (30) days prior to the permit expiration date to avoid full plan review requirements.

Permit Revocation

A driveway permit may be revoked for failure to comply with the Town's driveway design and construction policies and regulations, the UDO, and/or the terms and conditions of the NCDOT driveway permit. If a driveway permit is revoked, the Town may require the permittee or property owner to physically eliminate the driveway and replace or repair any existing sidewalk, curb & gutter, and associated storm drainage. If the permittee or property owner does not physically eliminate the driveway and replace or repair the sidewalk, curb & gutter, and associated storm drainage within thirty days (30), the Town may do so and charge the expense to the permittee or property owner.

Driveway Abandonment

If a driveway connection is abandoned, the Town may require the permittee and/or property owner to physically eliminate the driveway and replace or repair any existing sidewalk, curb and gutter, and storm drainage. If the permittee and/or property owner does not physically eliminate the driveway and replace or repair the sidewalk within a reasonable period of time, the Town may do so and charge the expense to the permittee or property owner.

Driveway Bond

The Town may, at its sole discretion, authorize the issuance of a certificate of occupancy or authorize the use of a driveway connection prior to completion of all work required in a driveway permit by requiring the permittee to post a bond to ensure the completion of required work.

Driveway Variance

The Town may, at its sole discretion, grant a variance from the driveway policy in order to preserve a tree within a public right-of-way for which a tree removal permit is required under section 9 of the Unified Development Ordinance (UDO) and the granting of such a variance would not be inconsistent with the objectives and intent of the driveway policy.

Driveway Inspection

Each proposed driveway must be inspected by a representative of the Town's Development Services Staff and/or designee after concrete forms are set to final grade, but before any concrete or asphalt has been poured placed. The contractor is required to call the Development Services Department *(704-843-2195)* to schedule this inspection. Next day inspections are available and same-day inspections are possible if the Development Services

Department receives the telephone request between 8:00 a.m. and 9:00 a.m. Monday through Friday. No inspections will be scheduled if the proper approval has not been issued. In case of failure of the contractor or property owner constructing the driveway to conform to the requirements of this Policy, the inspector or other official of the Development Services Department exercising supervision over the work shall have the authority to stop the work immediately and cause the driveway to be barricaded. That official shall have authority to and shall require the removal or alteration of any driveway which does not conform to the requirements documented in this Policy. Both the property owner and the contractor shall be financially responsible for the removal or alteration and/or cost of removal or alteration of such defective driveway.

Driveway Construction
Additionally, the contractor shall obtain a temporary street closure permit from the Development Services Department prior to the closure, blockage, or construction activities in any public travel lanes or sidewalks. Any closure or blockage of any public travel lane shall be performed according to the standards set forth in the Federal Highway Administration's *Manual on Uniform Traffic Control Devices (MUTCD)*, and the latest revision of *The North Carolina Department of Transportations' Roadway Standard Drawings Manual*.

2.3 Submittal Requirements

For proposed driveways to existing properties, no driveway approval will be granted until two copies of the approved plans showing the location and dimensions of all proposed improvements are filed with the Development Services Department. Plans should identify the site by address, adjacent properties, and the approximate distance to the nearest intersecting street or driveway.

Information required on the plans submitted shall include:

- A complete plan view of the site showing existing and proposed buildings with interior parking layout and traffic circulation patterns;
- Existing and proposed driveway locations and dimensions, including but not limited to:
    a. Distance from other streets and driveways on both sides of the roadway
    b. Width at the public right-of-way
    c. Curb radii
- Profile of estimated entrance and exit grades when grades exceed 5%
- Proposed pavement markings
- Maintenance of traffic plans for proposed roadway improvement construction that requires overnight closures or lane shifts;
- Horizontal and vertical sight distance information;
- Existing and/or proposed sidewalks, bicycle paths, or other multi-modal features;
- Street names, primary or secondary road numbers (when applicable), right-of-way and pavement widths and location of street return on corner lots;
- Proposed location of off-street loading and unloading facilities; and
- Retaining walls, drainage structures, utility poles, fire hydrants, traffic control cabinets, and other physical features which affect the driveway location and sight distance.

Non – Residential Change of Use

A new driveway permit will be required for non-residential change of use development plans if they meet either of the following criteria.

1. Current driveway is in disrepair and does not meet the Town's minimum design criteria
2. Where the existing driveway does not meet ADA accessibility requirements

3– DRIVEWAY DESIGN CRITERIA

3.1 General Criteria

The final decisions regarding the appropriate driveway type, placement, and quantity of driveways per site are based on various factors including but not limited to the proposed land-use, traffic characteristics of the adjacent public street, existing site conditions, proposed density, and other environmental factors and considerations. In general, the Development Services Department will follow national design criteria identified in the latest version of the AASHTO Policy on Geometric Design when regulating the minimum requirements for driveway design and driveway placement.

To that end, the Town of Waxhaw has published a series of standard driveway designs provided in the *Engineering Design & Construction Standards Procedures Manual* that have a proven record of meeting the traffic demands for most land development projects seeking residential and commercial driveway access to the public street system. In cases where the standard driveway designs do not meet the development's site-specific needs, the site designer can provide a non-standard driveway design to the Development Services Department for review and consideration.

The site designer is encouraged to do as much advanced coordination of such design as is practical before the construction documents are officially submitted for review to prevent the official permitting schedule for the site from being negatively impacted.

The following section of this document entitled "Standard Driveway Types" will provide a brief definition of each driveway type, its general applicability, and specific design considerations for each respective standard driveway type. The subsequent design considerations in each subsection should not be considered a comprehensive analysis of every aspect of the respective driveway type, but key considerations that should be noted during the site design. The Town Engineer or designee reserves the right to require a different driveway type than what a designer proposes based on safety, proper alignment of the specific driveway type to its appropriate geographic/land-use context, coordination with the public street that the driveway accesses and the influence of the specific driveway on site design.

3.2 Standard Driveway Types

<u>Driveway Type</u>

- **Type I (111.1, 113.1, & 118.1)**

Definition:

Any driveway that provides access to a single-family residence, duplex, or triplex. This driveway has no radius returns and is either constructed as a drop-curb concrete ramp where standard 2'6" vertical curb-and-gutter is present, or constructed to the back of existing curb where valley curb is present. Sidewalks (unless located at back-of-curb) do not change grade when crossing a Type I driveway.

Applicability:

This driveway type should be used for all single-family, duplex, and tri-plex residential driveways.

Design Considerations:

Type I driveways must be designed with sufficient length to accommodate the anticipated number of vehicles such that no parked vehicles will overhang the sidewalk. The design must include at least 20 feet of pavement between the right-of-way and any structure. The minimum driveway width is 10 feet on a local or collector street and 15 feet on a thoroughfare. The maximum width for a Type I driveway is 30 feet.

- **Type II (108.1, 109.1, 110.1, 112.1, 114.1)**

Definition: A drop-curb concrete ramp driveway that provides access to small office, multi-family, retail, recreational, industrial, or institutional buildings. This driveway does not have radius returns. Sidewalks (unless located at back-of-curb) do not change grade when crossing a Type II driveway.

Applicability:

This driveway should be used for any facilities that generate a low to moderate number of vehicle trips (20 – 100 trips/day). Type II driveways are also preferred for urban or highly commercialized areas where high numbers of pedestrians can be expected to travel along the intersecting sidewalk and where too many driveways are present to allow for the spacing necessary to accommodate Type III driveways. Type II driveways are also appropriate for sites with un-channelized vehicular circulation or where it is otherwise important that entering vehicles decelerate significantly to maneuver on site.

Design Considerations:

Type II driveways should always be designed to the minimum width that effectively accommodates the vehicles entering and exiting the site. Typically Type II driveways are designed to accommodate the single unit design vehicle (SU-30). Where larger vehicles are anticipated, the driveway apron should be designed to accommodate the actual wheel paths of the turning vehicle, rather than providing a uniform width, which is often unnecessarily large. Wherever possible, planting strips should be provided to separate the sidewalk from the driveway apron, thereby allowing a constant grade for the sidewalk. The minimum driveway width is 20 feet for one-way Type II Driveways. The maximum width for one-way Type II driveways is 30 feet. The minimum driveway width is 26 feet for two-way Type II Driveways. The maximum width for two-way Type II driveway is 50 feet.

- **Type II – Modified (115.1)**

Definition:

A drop-curb concrete ramp driveway that serves land uses in urban zoning districts. This driveway has small radius returns. Sidewalks do not change grade when crossing a Type II driveway.

Applicability:

Type II-modified driveways can also be used where sufficient planting strips are present and there is an operational need to provide radius returns to accommodate larger turning vehicles while still using a drop-curb style driveway.

Design Considerations:

This driveway should be designed to the smallest width that will accommodate all anticipated turning vehicles. The radius should be equal to or no greater than the width of the planting strip.

- **Type III (120.1)**

Definition:

A street-type driveway with radius returns. Through sidewalks are interrupted across Type III driveways, but wheelchair-accessible ramps are present to provide continuous passage across the driveway. All proposed public street connections will be considered Type III driveways.

Applicability:

This driveway is suitable for facilities with a moderate to high number of vehicle turning movements, or where a substantial number of truck movements are expected to occur. Because type III driveways allow for higher capacity, they are ideal for consolidating access to multiple land uses. This is desirable as a means of increasing the efficiency of vehicles entering and exiting the roadway, and reducing the total number of driveways along a roadway. Type III driveways must be used wherever dedicated left-turn lanes are required in order to facilitate the turns.

Because of the higher vehicle entry and exit speeds and the interruptions they cause to pedestrians, proper spacing is critical for Type III driveways. Type III driveways are generally inappropriate in locations with high pedestrian activity.

Design Considerations:

Type III driveways should always be designed to the minimum width that effectively accommodates the vehicles entering and exiting the site. The overall driveway width and the radius returns should be designed to accommodate the actual wheel paths of the turning vehicle. Since larger radius returns increase the distance required for a pedestrian to cross, they should be designed to the smallest radius which still accommodates the anticipated entering and exiting traffic and which still allows for a reasonable turning speed. Type III driveways should be located on the site where the highest vehicular utilization can occur and where proper channelization can

be provided. Since Type III driveways tend to serve higher volumes of entering and exiting traffic, the driveway stem must also be designed to provide an adequate amount of internal channelization, thereby reducing the potential for entering traffic to back-up into the public right-of-way.

4 – DRIVEWAY LOCATION & SEPARATION REQUIREMENTS

Separation from Signalized Intersection

Traffic signals are a critical component of the transportation system, as they aide in alleviating congestion, metering traffic, and organizing the various transportation demands that motorists and pedestrians place on the public street system. Introducing driveways in close proximity to a signalized intersection can degrade the intersection's capacity, safety, and operations. Therefore, special consideration will be given to driveways that are proposed in a location that could affect an existing or proposed traffic signal. 150ft from signalized intersections (approach and departure side) will be the minimum distance required permit a commercial driveway access. **Driveway placement will be evaluated on a site-specific basis when a site is adjacent to a traffic signal and its property frontage is less than 200' or it is otherwise not possible to provide the minimum separation**.

4.1 Driveway Placement

Separation from Un-Signalized Intersection (Corner Clearance)

In general, 75' is the minimum separation a commercial driveway should have from an un-signalized intersection. Development Services staff will evaluate the site specific conditions when the site property frontage is less than 75' or if a spacing greater than 75' creates safety and/or operational problems within the public street.

Where dual left turns are present at signalized intersections, any new driveway proposed within the functional area of the intersection will be restricted to right turn-in, and right turn-out (commonly referred to as "right-in/right-out") vehicular movements. This will be accomplished via the installation of a raised concrete median island.

Separation from Adjacent Driveways

Driveways too closely spaced to one another have the ability to create sight distance problems, and introduce unnecessary conflicts within the public street network. In circumstances where access is proposed to a non-median divided public street that is classified as a Collector Street or higher, the minimum driveway separation will be 50 ft. This dimension can be reduced to 20 ft when access is proposed to a median-divided public street classified as a Collector Street or higher. ***Note that the previously mentioned driveway spacing will not accommodate every situation, and Development Services staff reserves the right to modified/adjust these dimensions based on the existing/proposed site and roadway conditions.***

Separation from Property Line

In general, 10ft is the minimum driveway separation from a site's property line. This distance is measured from the property line to the radius point of the driveway. In cases where there is no radius for the driveway (Type II, and Type IV), the ten foot measurement will be taken from the tie-

in location of the taper to the existing roadway pavement. The application of the ten foot property line separation requirement should ensure a minimum of 20ft between driveways. In cases where an existing driveway is located closer to the property line than ten feet, Town staff may require additional separation from the property line for the proposed driveway to ensure a minimum of twenty feet of driveway separation is provided.

Sight Distance

One of the most important criteria that is necessary to provide safe access to the public street system is the presence of adequate available Sight Distance. As such, all existing and proposed driveway entrances must conform to the latest version of "*AASHTO'S POLICY OF GEOMETRIC DESIGN*". To provide and maintain an adequate "window of visibility" for the motorist, no object, planting, structure, or sign shall be placed within this triangle at a height between 2.5 feet and 10 feet above the finished grade of the proposed driveway.

Figure 1 should be used as guidance information to assist developers and site designers in properly ensuring adequate approach and departure sight distance for the most common scenarios in Waxhaw. Please note additional sight distances cases are identified in the latest revision of "*AASHTO'S POLICY OF GEOMETRIC DESIGN*".

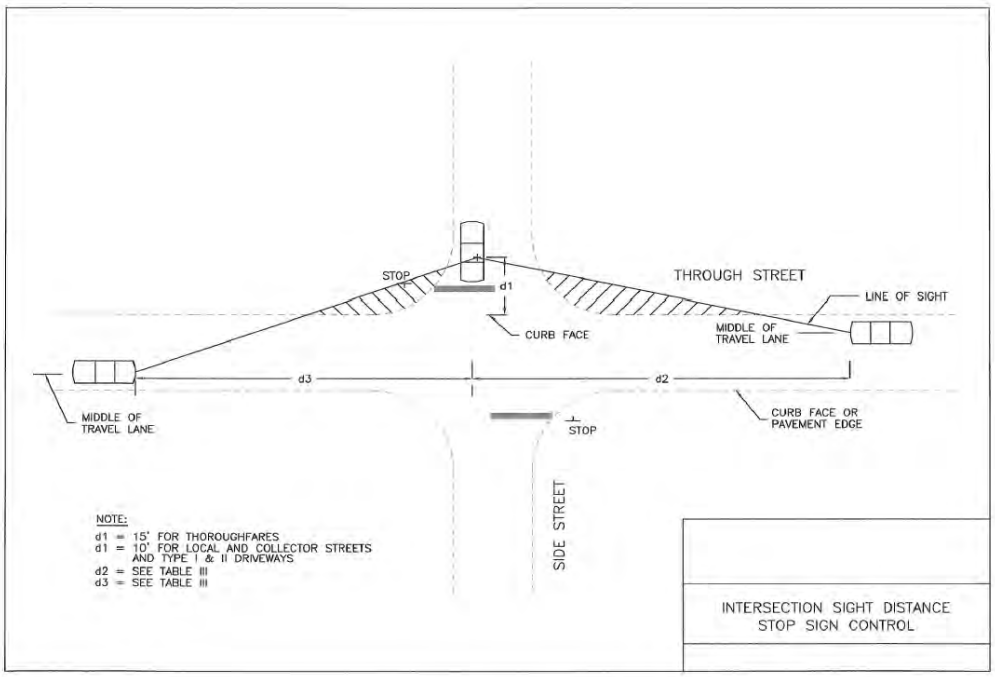

Figure 1: Intersection Sight Distance Stop Sign Control

Design Speed (MPH)	Minimum Intersection Sight Distance for left-turn from stop (ft)	Minimum Intersection Sight Distance for Right Turn from Stop (ft)
15	170	145
20	225	195
25	280	240
30	335	290
35	390	335
40	445	385

Table 1: Intersection Sight Distance for stop-sign and signal-controlled intersections for passenger cars (Tables 9-6 & 9-7, 2011 AASHTO Policy on Geometric Design)

5 –TURN LANE WARRANTS & DESIGN

In general, Figure 2 will be used as the criteria to determine if/when either a left or right turn lane will be required to support the traffic generated by the proposed development. Figures 3, 4, and 5 should serve as design guidelines and criteria to assist project engineers when design left and right turn lanes on and/or for public streets within the Town limits.

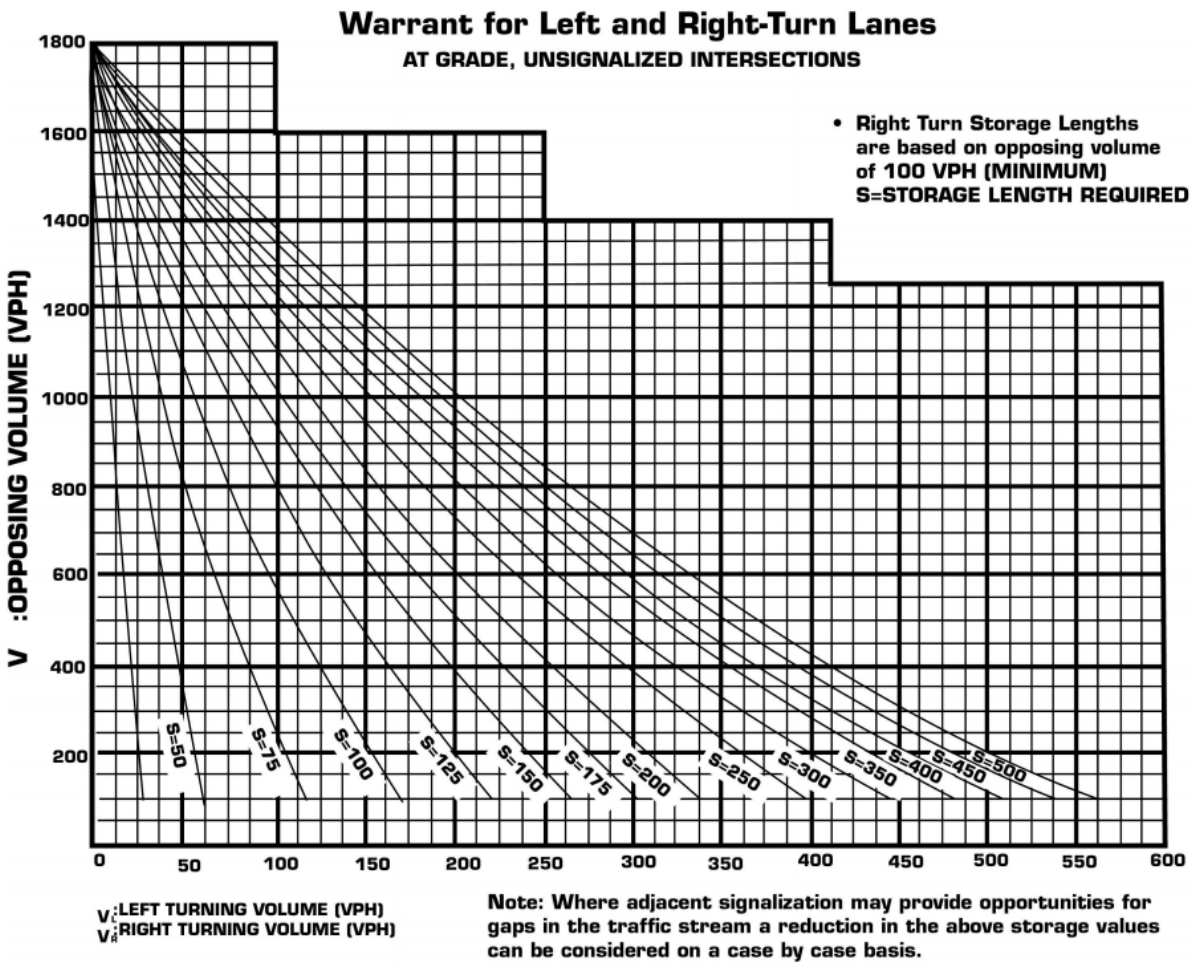

Figure 2: Left and Right Turn Lane Warrants (2003 NCDOT Policy on Street and Driveway Access to North Carolina Highways)

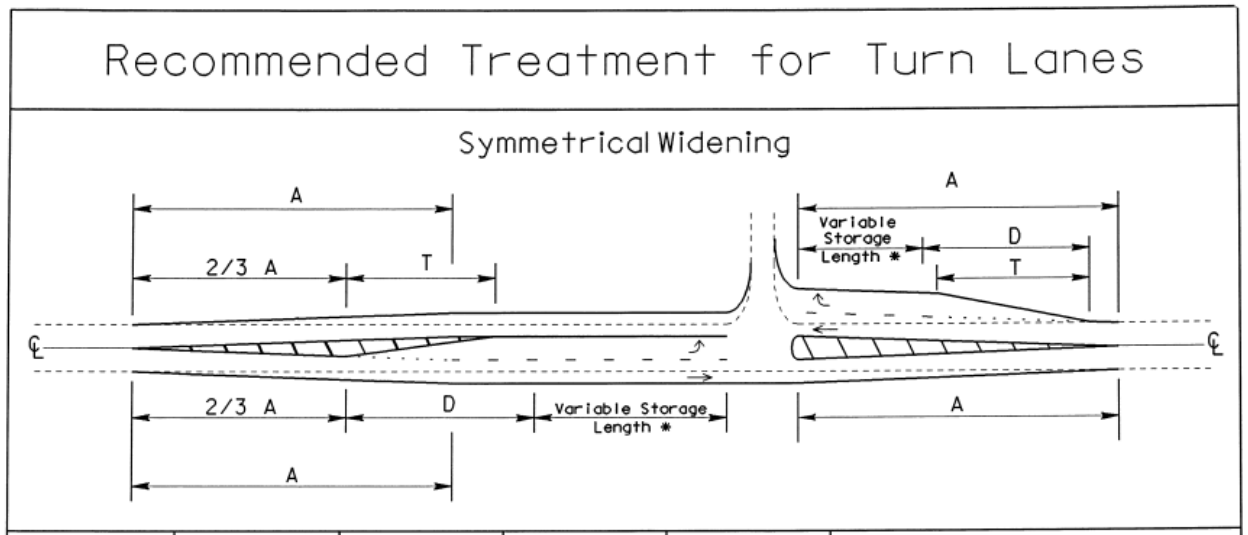

Design Speed (mph)	Posted Speed (mph)	Minimum Deceleration Length (D)	Desirable Deceleration Length (D)	Bay Taper Length (T)
30	≤ 25	100′	150′	75′
35	30	100′	150′	75′
40	35	150′	200′	100′
45	40	150′	250′	100′
50	45	150′	300′	100′
55	50	200′	500′	150′
60	55	250′	575′	200′

Approach / Departure Taper (A)

$A = WS^2/60$ (IF $S \leq 40$ MPH)

$A = WS$ (IF $S > 40$ MPH)

S = Design Speed

W = Width of Lateral Shift

* Storage length for waiting vehicles should be calculated based on the latest version of the Highway Capacity Manual or Policy on Street and Driveway Access to North Carolina Highways.

Figure 3: Recommended Treatment for Turn Lanes (2003 NCDOT Policy on Street and Driveway Access to North Carolina Highways)

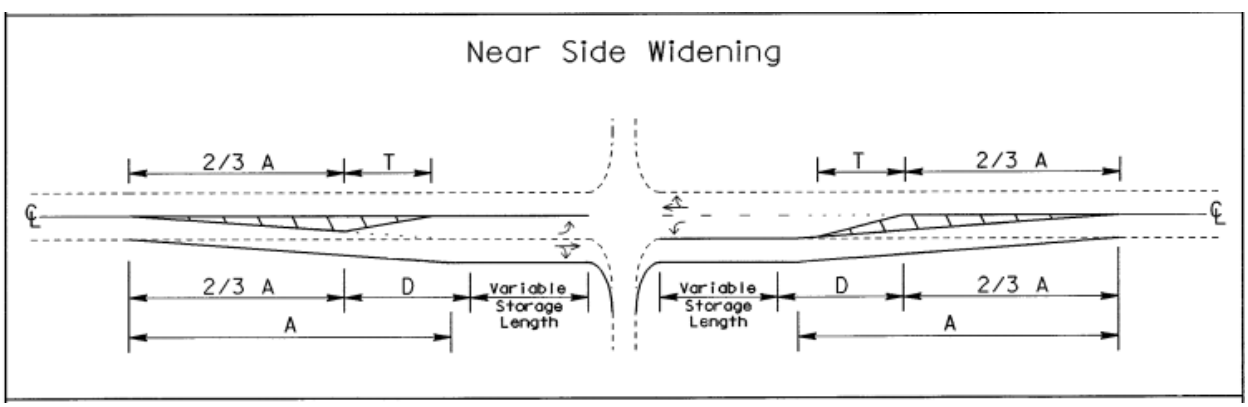

Figure 4: Near Side Widening (2003 NCDOT Policy on Street and Driveway Access to North Carolina Highways)

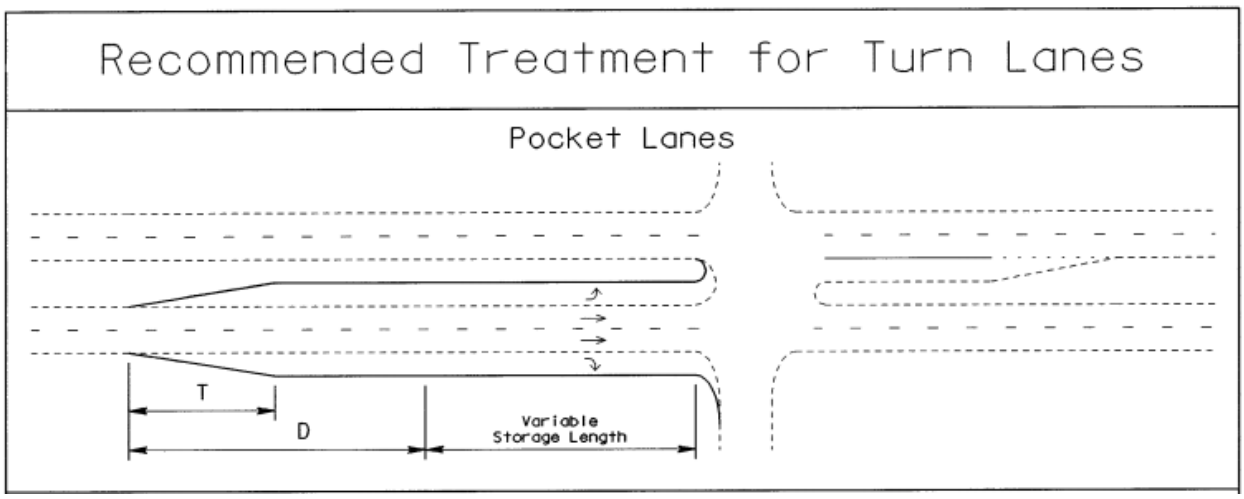

Figure 5: Right-turn Lane (2003 NCDOT Policy on Street and Driveway Access to North Carolina Highways)

Access Restrictions

While providing adequate public safety and insuring efficient street operations will be the overarching criteria in determining whether or not the Town restricts site access, there are a few specific criteria where a property owner and/or private developer should expect for their respective site access to be restricted to vehicular movements less than full-movement.

1. When the site proposes access to an existing public street cross –section is four lanes or greater
2. Within 150ft (approach or departure) of a signalized intersection
3. Whenever site access is proposed where dual – left turns turn lanes are present
4. At locations where a known accident and/or street operations problems exists
5. Where available sight distance isn't present

The criteria above are not intended to represent a comprehensive list of every situation where Development Services staff will restrict site access; however, it provides a general framework of the most common situations where property owners and/or private developers should expect limited site access.

6 – TRAFFIC IMPACT ANALYSIS (TIA)

A Traffic Impact Analysis (TIA) may be required for developments that have the potential to create a significant impact to the adjacent or surrounding public street system. These include but are not limited to large or very intense developments that generate 1,000 daily trips and/or 100 peak hour total peak hour trips as specified in the Town of Waxhaw's Traffic Impact (TIA) Policy. A TIA, and corresponding signal warrant analysis will be required for proposed developments that contemplate the need for a new traffic signal(s) or modifications to existing traffic signals.

7 – PAVEMENT MARKINGS & SIGNAGE

All roadway signs and pavement markings placed on driveway entrances and within the public right-of-way must conform to the latest edition or revision of both the "Manual on Uniform Traffic Control Devices (MUTCD)," and NCDOT's latest version of the "Roadway Standard Drawings Manual" and shall be located and maintained in accordance with the approved construction plan(s).

8 – TRAFFIC CONTROL DEVICES

All traffic control devices placed on driveway entrances, and within the public right-of-way must conform to the latest edition or revision of the "Manual on Uniform Traffic Control Devices (MUTCD)," and NCDOT's latest version of the "Roadway Standard Drawings Manual" and shall be located and maintained in accordance with the approved construction plan(s).

9 – PUBLIC, PRIVATE, & CHARTER SCHOOLS

The regulations and design criteria provided within this document will be used by Waxhaw staff during the review of new school construction plans. In cases where a new public school is proposed, the Union County Public School System will be subject to the Traffic Impact Analysis (TIA) Policy, along with submitting a completed NCDOT Municipal School Transportation Assistance (MSTA) vehicular queue calculator.

Private and Charter Schools will be evaluated on a case-by-case basis to identify that on-site vehicular storage exists. These sites may be required to submit a Transportation Technical Memorandum (TTM) based on the number of students, adequacy of the existing public infrastructure to accommodate the increase in traffic volume, proposed bell times, and future student population growth potential. The TTM will be used to help identify changes in traffic patterns associated with the proposed school and to properly identify any required mitigations necessary to alleviate the increase in traffic caused by the new school construction. Additionally, each proposed school will be required to submit a completed NCDOT Municipal School Transportation Assistance (MSTA) vehicular queue calculator to insure adequate on-site vehicular stacking exists, and vehicular queuing does not spill onto the public right-of-way.

APPENDIX-I

DRIVEWAY PERMIT APPLICATION

This application is required for all new connections to Town maintained streets including an individual single family residence in accordance with the latest Town of Waxhaw *Policy for Driveway Design & Construction*.

If the new driveway is to be located on a state maintained road, contact the North Carolina Department of Transportation at 704-218-5100.

Location of Property Requesting New or Modification of Access:_____

_____

Nearest Public Street Intersection:_____

Development Name:_____

Proposed Location and Type of Driveway(s):

Driveway #1 (circle all that apply) New Existing Residential Commercial/Other

Exact Distance and Direction to Nearest Public Street Intersection:_____

Driveway #2 (circle all that apply) New Existing Residential Commercial/Other

Exact Distance and Direction to Nearest Public Street Intersection:_____

Show proposed driveway(s) on attached sketch or site plan. This plan must show details of proposed driveways including proposed width and radius, pipe length and size, adjacent property lines, driveways on adjacent property, existing and proposed buildings, and parking areas and roadway features.

- I, the undersigned property owner, request access and permission to construct driveway(s) or street(s) on public right-of-way at the above location.
- I agree that no signs or objects will be placed on or over the public right-of-way other than those approved by the Town.
- I agree that the driveway(s) or street(s) will be constructed as shown on the attached plans.
- I agree that the driveway(s) or street(s) as used in this agreement include any approach tapers, storage lanes or speed change lanes as deemed necessary by the Town Engineer.
- I agree that this permit becomes void if construction of driveway(s) or street(s) is not completed within 12 months.
- I agree to construct and maintain the driveway(s) or street(s) in a safe manner so as not to interfere with or endanger the public travel.
- I agree to provide during construction proper signs, signal lights, flaggers and other warning devices for the protection of traffic in conformance with the current "Manual on Uniform Traffic Control Devices for Streets and Highways" and Amendments or Supplements thereto. Information as to the above rules and regulations may be obtained from the Town Engineer.
- I agree that the Town of Waxhaw will assume no responsibility for any damages that may be caused to such facilities, within the highway right-of-way limits, in carrying out its construction.

- **I AGREE TO NOTIFY THE TOWN ENGINEER IN WRITING WHEN THE PROPOSED WORK BEGINS AND WHEN IT IS COMPLETED.**

I agree that the driveway(s) described in this permit application will be constructed according to the approved driveway permit.

Property Owner Name:_____ **Phone: (____)_____-_____**

Property Owner Mailing Address:_____

Applicant's Signature:_____ **Date:**_____

Application Approved by Town Engineer:_____ **Date:**_____
(Signature)

Instructions: Town of Waxhaw Driveway Permit Applications Must Include:

1. **Two original signed Driveway Application Forms.**
2. **Two sets of site plans (or detailed sketch on separate page).**
3. **Mail or hand deliver application forms and site plans to Town Engineer's attention to: 1150 North Broome Street Waxhaw, NC 28173.**

(For Official Use Only)

Date Application Received:_____ Application Received by:_____

APPENDIX- J

TRAFFIC CALMING POLICY

Town of Waxhaw
1150 N. Broome Street
Waxhaw, NC 28173
(704) 843-2195 www.waxhaw.com

`August 13, 2019

TRAFFIC CALMING MISSION

The Town of Waxhaw's goal is to provide safe and pedestrian friendly streets for all of the residents of the town while balancing the need for an efficient transportation network. As part of that goal we understand that traffic must be able to flow freely but to do so as safely possible. This policy is meant to provide safe design criteria for new developments and avenues for citizens to report unsafe conditions, establish a process for review and development of solutions for unsafe areas on existing roads.

Definitions:

- Chicane- Curb extensions that alternate from one side of the street to the other, forming S-shaped curves.
- Chokers- Curb extensions at midblock locations that narrow a street by widening the sidewalk or planting strip.
- Roundabout- A circular junction requiring traffic to circulate counterclockwise around a center island typically used for large volumes of traffic.
- Speed Cushions- Rounded raised areas placed across the roadway.
- Neckdowns- Curb extensions at intersections that reduce the roadway width from curb to curb. Work best for intersections with substantial pedestrian activity.

Program Tools:

The Town of Waxhaw's traffic calming program relies on the "Five E" process; Education, Enforcement, Evaluation, Economics, and Engineering to address problems of excessive traffic speed or volume. These strategies will be implemented using a phased approach, beginning with the least restrictive and least expensive methods (Phase I) and proceeding to more complex solutions (Phase II). Where appropriate, Phase I approaches will be used first. These include targeted enforcement, education, and the use of signs. If these strategies are ineffective, Phase II solutions may be considered. In some cases, based on Town staff evaluation, Phase I may be bypassed in favor of the Phase II approach. In some instances a Phase I approach may be implemented as a temporary mitigation while the Phase II planning process is underway. In either phase, different strategies may be used in combination.

What Roads are covered in this Program?

The control measures provided in this document are intended to be applied to local streets serving predominantly single-family residential neighborhoods. Collector streets that run through neighborhood areas may also be considered for less restrictive traffic calming measures. Streets that are designated as thoroughfares or which are classified as State or Private are not eligible for this program.

All new developments will be reviewed for potential locations where excessive traffic speed may be a concern. Engineering in coordination with the developer will use these strategies in an effort to mitigate future traffic problems.

Paying for Traffic Calming Measures

The cost of the speed cushion installation, maintenance, and signage/markings for the traffic calming device(s) will be the responsibility of the Town. If the subdivision has decorative sign supports, the HOA or homeowners will be responsible for the cost of installation and maintenance of the decorative sign

supports.

When all petition requirements have been met, the individual or HOA shall execute a memorandum of understanding (MOU) with the Town to govern the responsibility of the installation of the traffic calming measure(s).

Speed cushion (hump), chicane, choker, or mini round-about locations will be determined by the Town Engineer and only the standard speed cushion installation (See Town Design Standards) will be allowed on Town maintained streets. **Any traffic calming measures must be approved by Fire, Police, and EMS services.**

TRAFFIC CALMING PROCESS FOR EXISTING STREETS

The process consists of two phases. **Phase 1** includes the property owners' request and Town evaluation. **Phase 2** includes a property owner petition process and Town implementation of appropriate traffic calming measure(s).

Phase 1: Traffic Calming Process

Property Owner Request

A minimum of three owners of separate property along a street or residential area must submit a written request to the Town to perform a traffic evaluation on neighborhood/subdivision roadways when the property owners have a traffic concern of vehicle speed that affects pedestrian safety or excessive volumes of through traffic in a residential neighborhood/subdivision. The Town of Waxhaw Engineer will provide an official request form or the form can be found online at www.waxhaw.com. Additionally, any member on the Board of Commissioners, the Town Manager, The Chief of Police, or a Town Staff Engineer may initiate a traffic calming evaluation at any time.

Evaluation

The purpose of the evaluation is to determine whether or not the street qualifies for one or more of the traffic-calming measures (speed limit reduction/multi-way stop/ electronic radar notifying signage/ speed cushion (hump)/chicanes/chokers/mini round-about). The traffic data collection will occur over a 72-hour period and the evaluation, in its entirety, may take approximately 4 to 6 weeks to complete from the time the completed official request is received. The Town of Waxhaw conducts the evaluation based upon the following criteria:

1. Street must be classified as a two-lane, local residential street.
2. Street must not be a Major or Minor thoroughfare or proposed to be a thoroughfare in the future.
3. Street must have an average annual daily traffic volume that is greater than 250 vehicles per day
4. (VPD) and less than 5,000 VPD.
5. Speed of at least 15% of the traffic on the street exceeds the posted speed limit by at least 5 mph.
6. Street must not operate at a design speed of 40 mph or greater to reduce speeds to 25 mph. (25 mph is the lowest speed limit that will be posted).

7. Application must not have been denied or become void within last (12) months.

Once the evaluation is completed by the Town Engineer, they will notify the applicants in writing of the outcome. If the street does not qualify, the specific reasons will be included in the notification. If the street qualifies, Phase 2 of the Traffic Calming process will begin.

Phase 2: Traffic Calming Process

Property Owner Petition

Phase 2 begins when the applicants receives from the Town written notice that the requested street has met the requirements for traffic calming. The qualifying street calming measure(s) are listed and an official petition form noting the measure(s) is provided to the applicants. At the same time the Town notifies the applicants of the measures and provides them with a petition, the Town will mail a letter to the property owners listed on the petition. This letter is based on tax records and will be mailed to all property owners included on the petition, notifying them that a traffic calming petition is being provided to the applicants. The letter will identify the type and location of the traffic calming device(s). The letter will give contact information for the applicants initiating the petition request. It is the applicants' responsibility to complete the petition by obtaining all necessary signatures and returning it to the Town Engineer. A qualifying petition must be returned to the Town within 90 calendar days of the start of Phase 2 or the petition becomes void. The installation of traffic calming measures on local residential streets requires the submittal of a petition meeting the following criteria:

1. Traffic Calming Petition must be on forms provided by the Town of Waxhaw. The Town will only provide forms where the qualifying criteria under Phase 1 have been met.
2. Town Engineer will define the area that must be petitioned. Generally, the entire length of the street must be petitioned. The only exception is when a street changes character or is bisected by a major or minor thoroughfare.
3. The Traffic Calming Petition must have a minimum of 70% of the properties, within the area defined in Step 2, signing in favor of the petition. Only one person or entity identified as owners per tax records is required to sign in order to qualify a particular property. For example: If a husband and wife are listed, as owners of a piece of property only one must sign the petition in order for the property to qualify. If a home owners group is listed as the owner of record, the President of the home owners association must sign the petition as President and if a property is shown as being an LLC or Incorporated, the person responsible for signing for these business entities must sign for the property to qualify. This signature is required in order to continue with the process. Properties that have an address on a different street but border on the street affected must be included.

Once a completed petition is received, the Town will verify the signatures match the tax records and notify the applicants and identified signatories to the petition in writing upon completion of all qualifying applications. If the petition is returned to the Town with insufficient signatures, then the Town will notify signatories in writing to this fact.

Notice of Public Information Meeting

Residents within the community of a proposed traffic control measure will be given notice of a Public Information Meeting and an opportunity to provide written comments so their views and opinions may be expressed regarding the traffic control measures being proposed. The Town Manager will determine which notifications will be utilized. The notification method(s) selected may include the following:

1. Advertisements in local publications
2. Legal Notice
3. Letters sent to the residents/property owners
4. Posted on Public Bulletin Boards and at the Public Library.
5. Notifications on the Town of Waxhaw website and other electronic outlets but not limited to Facebook, Twitter, etc.
6. Attempts to work with the local HOA (if there is one) or other groups of residents to communicate to the residents of the upcoming meeting and requesting participation.
7. Flyer/notification placed in the Town Newsletter.

Upon receipt of the information from the Town Manager the Board of Commissioners shall consider at a scheduled meeting and make a determination to approve the request as presented, deny the request or modify the request.

TYPES OF TRAFFIC CALMING MEASURES

The Town of Waxhaw may utilize several types of traffic calming measures when a residential street qualifies for traffic calming: speed limit reduction, multi-way stops, electronic radar notifying signage, speed cushions (humps), chicanes, chokers, and/or mini round-about.

Electronic radar notifying signage are designed to be installed analogous with normal speed limit signs. These electronic radar signs are meant to notify the vehicle operator of their speed and, when appropriate, adjust their speed.

Chicanes, chokers, and mini roundabouts are horizontal traffic calming measures that are designed to limit or narrow the travel lanes. These horizontal measures diminish the linearity of traffic flow, forcing vehicles to slow as the travel lanes narrow and/or curve. **Temporary installation of these horizontal traffic calming measures will be implemented and tested before permanent action is taken. A public input period, which conforms to Phase Two's public information meeting parameters, will be held to determine if these horizontal measures will be permanently installed.**

Other criteria, in addition to the standards previously listed in this policy, may be required for each measure to qualify for implementation. The additional criteria for each measure are listed below:

Multi-way Stops

A common traffic calming measure is the installation of the 3-way or 4-way stop signs. The following, additional, criteria are used to determine if multi-way stops are feasible for any specific location:

1. Speed of at least 15% of traffic must exceed posted speed limit by 5 mph.
2. The longest leg of a side street of the intersection being considered must exceed 400 ft. in length.
3. The intersection being considered must be at least 300 ft. from another stop condition.

Multi-way stops are limited in effectiveness and will be limited in application

Speed Cushions and Humps

Speed cushions are a speed control device generally constructed of asphalt and designed to cause a driver to slow to approximately 25 MPH. Greater speeds could cause the driver to feel discomfort as the car hits the cushion. Roads that have these devices typically see a 5% to 10% reduction in speeds. These devices are used on residential streets intended for use by local residents. They are not used on collector types of roads.

Electronic radar notifying signage are designed to be installed analogous with normal speed limit signs. These electronic radar signs are meant to notify the vehicle operator of their speed and, when appropriate, adjust their speed.

1. Speed of at least 15% of traffic must exceed posted speed limit by 5 mph.
2. Grade of the street shall not exceed 8% for vertical traffic calming measures.
3. Speed cushion location shall be located at least 300 ft. from a curve with a horizontal radius of less than 300 ft.
4. Speed limit must be posted at 25 mph.
5. For Speed Cushion (Hump), recommendation(s) and placement(s) must be approved by Fire, EMS, and Police vehicles.

Speed Cushions/Humps have decided disadvantages. Horizontal control will be the preferred method of calming over vertical control

Removal of a traffic calming device

If a minimum of three property owners desire to have a traffic calming device removed, they must follow the same procedures outlined above for the installation of a device. Traffic calming devices cannot be petitioned for removal until a minimum of one year after installation. If petition qualifies for the removal of the device there is no cost to the property owners for speed limit or multi-way stops, however if the device is a speed cushion the applicants requesting the devices to be removed will be required to pay to the Town upfront the cost of removal. If any traffic calming device is petitioned and removed, another device may not be requested for five years from the date of the received removal petition.

APPENDIX-K

EROSION AND SEDIMENTATION CONTROL ORDINANCE

December 2016

AN ORDINANCE TO AMEND TITLE XV OF THE TOWN OF WAXHAW CODE OF ORDINANCES

BE IT ORDAINED by the Board of Commissioners of the Town of Waxhaw that Title XV of the Town of Waxhaw Code of Ordinances be amended to add Chapter 159, Erosion and Sedimentation Control, as follows:

Section 1. **TITLE XV, LAND USAGE**

ADD:

CHAPTER 159: EROSION AND SEDIMENTATION CONTROL

PREAMBLE
159.01 PURPOSE
159.02 JURISDICTION
159.03 DEFINITIONS
159.04 EXCLUSIONS
159.05 GENERAL REQUIREMENTS AND OBJECTIVES
159.06 MANDATORY STANDARDS FOR LAND DISTURBING ACTIVITIES
159.07 DESIGN AND PERFORMANCE STANDARDS
159.08 STORMWATER OUTLET PROTECTION
159.09 BORROW AND WASTE AREAS
159.10 ACCESS AND HAUL ROADS
159.11 OPERATIONS IN LAKES OR NATURAL WATERCOURSES
159.12 RESPONSIBILITY FOR MAINTENANCE
159.13 ADDITIONAL MEASURES
159.14 EXISTING UNCOVERED AREAS
159.15 PERMITS
159.16 EROSION AND SEDIMENTATION CONTROL PLANS
159.17 TRANSFERS OF PLANS
159.18 INSPECTIONS AND INVESTIGATIONS
159.19 PENALTIES
159.20 INJUNCTIVE RELIEF
159.21 RESTORATION OF AREAS AFFECTED BY FAILURE TO COMPLY
159.22 APPEALS
159.23 SEVERABILITY
159.24 EFFECTIVE DATE

PREAMBLE

The sedimentation of streams, lakes and other waters of this State constitute a major pollution problem. Sedimentation occurs from the erosion or depositing of soil and other materials into the waters, principally from construction sites and road maintenance. The continued development of this Town will result in an intensification of pollution through sedimentation unless timely and appropriate action is taken. Control of erosion and sedimentation is deemed vital to the public interest and necessary to the public health and welfare, and expenditures of funds for erosion and sedimentation control programs shall be deemed for a public purpose. It is the purpose of this Ordinance to provide for the creation, administration, and enforcement of a program and for the adoption of minimal mandatory standards which will permit development of this Town to continue with the least detrimental effects from pollution by sedimentation.

159.01 PURPOSE. This Ordinance is adopted for the purpose of:

(1) Regulating certain land-disturbing activity to control accelerated erosion and sedimentation in order to prevent the pollution of water and other damage to lakes, watercourses, and other public and private property by sedimentation; and

(2) Establishing procedures through which these purposes can be fulfilled.

159.02 JURISDICTION.

This Ordinance is hereby adopted by the Board of Commissioners to apply to all areas within the corporate limits of the Town of Waxhaw.

The Commission shall have jurisdiction, to the exclusion of local governments, to adopt rules concerning land-disturbing activities that are:

a. Conducted by the State.
b. Conducted by the United States.
c. Conducted by persons having the power of eminent domain other than a local government.
d. Conducted by a local government.
e. Funded in whole or in part by the State or the United States.
f. Related to oil and gas exploration and development on the well pad site.

In addition, certain exclusions are set forth in Section 159.04.

Where a conflict exists between any limitation or requirement contained in this Ordinance and those in any other ordinance, regulation, or plan, the more restrictive limitation or requirement shall apply. Except as otherwise provided herein, this ordinance shall not repeal, abrogate, or revoke any other ordinance, regulation, or plan.

159.03 DEFINITIONS.

The words and phrases used in this Ordinance shall have the meaning assigned in this Section provided, unless the context clearly indicates otherwise. These definitions are derived from the North Carolina Sedimentation Control regulations, 15A NCAC § 4A.0105 and the Sedimentation Pollution Control Act of 1973, NCGS § 113A-52.

Accelerated Erosion – means any increase over the rate of natural erosion as a result of land disturbing activity.

Act – means the North Carolina Sedimentation Pollution Control Act of 1973 and all rules and orders adopted pursuant to it, as amended from time to time.

Adequate Erosion Control Measure, Structure, or Device – means one which controls the soil material within the land area under responsible control of the person conducting the land- disturbing activity, as such controls are specified in the Ordinance.

Affiliate – a person that directly or indirectly, through one or more intermediaries, controls, is controlled by, or is under common control of another person.

Being Conducted – means a land-disturbing activity has been initiated and permanent stabilization of the site has not been completed.

Board of Commissioners – means the Town of Waxhaw Board of Commissioners.

Borrow – means fill material which is required for on-site construction and is obtained from other locations.

Buffer Zone – means the strip of land adjacent to a lake or natural watercourse.

Town of Waxhaw Erosion Control Inspector/ Erosion Control Inspector/ Inspector – includes the Town of Waxhaw Development Services Director, who is principally responsible for the administration of this Section, or his duly authorized designee. This term shall also include any persons, agents or other representatives of the town as authorized by the Development Services Director.

Completion of Construction or Development – means that no further land-disturbing activity is required on a phase of a project except that which is necessary for establishing a permanent ground cover.

Commission/NCSCC – means the North Carolina Sedimentation Control Commission.

Department - means the North Carolina Department of Environmental Quality.

Development Services Department – means the Town of Waxhaw Development Services Department

Discharge Point – means that point at which runoff leaves a tract.

District/SWCD – means the Union Soil and Water Conservation District (also referred to as the "SWCD") created pursuant to Chapter 139 of the North Carolina Statutes.

Energy Dissipater – means a structure or a shaped channel section with mechanical armoring placed at the outlet of pipes or conduits to receive and break down the energy from high velocity flow.

Erosion – means the wearing a way of land surface by the action of wind, water, gravity, or any combination thereof.

Ground Cover – means any natural vegetative growth or other material which renders the soil surface stable against accelerated erosion.

Lake or Natural Watercourse – means any stream, river, brook, swamp, creek, run, branch, and any reservoir, lake or pond, natural or impounded, in which sediment may be moved or carried in suspension, and which could be damaged by accumulation of sediment.

Land-Disturbing Activity – means any use of the land by any person in residential, industrial, educational, institutional, or commercial development, highways and road construction and maintenance that results in a change in the natural cover or topography and that may cause or contribute to sedimentation.

Local Government – means any county, village, town, or city, or any combination of counties, villages, towns and cities acting through a joint program with the Town pursuant to the provisions of the Act.

NCSCC – means the North Carolina Sedimentation Control Commission.

Natural Erosion – means the wearing away of the earth's surface by water, wind or other natural agents under natural environmental conditions undisturbed by man.

Parent – an affiliate that directly or indirectly, through one or more intermediaries, controls another Person.

Person – means any individual, partnership, firm, association, joint venture, public or private corporation, trust, estate, commission, board, public or private institution, utility, cooperative, interstate body, or other legal entity.

Person Conducting Land-Disturbing Activity – means any person who may be held responsible for a violation unless expressly provided otherwise by this Ordinance, the Act, or any order adopted pursuant to this Ordinance or the Act.

Person Responsible for the Violation – as used in this Ordinance and G.S. 113A-64 means:

(1) The developer or other person who has or holds themselves out as having financial or operational control over the land-disturbing activity; and/or

(2) The landowner or person in possession or control of the land who has directly or indirectly allowed the land-disturbing activity or has benefited from it or has failed to comply with any

provision of this Ordinance, the Act, or any order adopted pursuant to this Ordinance or the Act.

Phase of Grading – means one of two types of grading, rough or fine.

Plan – means a complete Erosion and Sedimentation Control Plan.

Sediment – means solid particulate matter, both mineral and organic, that has been or is being transported by water, air, gravity, or ice from its site of origin.

Sedimentation – means the process by which sediment resulting from accelerated erosion has been or is being transported off the site of the land-disturbing activity or into a lake or natural watercourse.

Siltation – means sediment resulting from accelerated erosion which is removable by properly designed, constructed, and maintained control measures; and which has been transported from its point of origin within the site of a land-disturbing activity; and which has been deposited in or is in suspension in water.

Storm Drainage Facilities – means the system of inlets, conduits, channels, ditches and appurtenances which serve to collect and convey storm water through and from a given drainage area.

Storm Water Runoff – means the direct runoff of water resulting from precipitation in any form.

Subsidiary – an Affiliate that is directly or indirectly, through one or more intermediaries, controlled by another person.

SWCD/ Union SWCD – means the Union Soil and Water Conservation District.

Ten-Year Storm – means the surface runoff resulting from a rainfall of an intensity expected to be equaled or exceeded, on the average, once in ten years, and of a duration which will produce the maximum peak rate of runoff, for the watershed of interest under average antecedent wetness conditions.

Town – means Town of Waxhaw.

Tract – means all contiguous land and bodies of water being disturbed or to be disturbed as a unit, regardless of ownership.

Twenty-five Year Storm – means the surface runoff resulting from a rainfall of an intensity expected to be equaled or exceeded, on the average, once in 25 years, and of a duration which will produce the maximum peak rate of runoff, from the watershed of interest under average antecedent wetness conditions.

Two-Year Storm – means the surface runoff resulting from a rainfall of an intensity expected to be equaled or exceeded, on the average, once in 2 years, and of a duration which will produce the

maximum peak rate of runoff, from the Watershed of interest under average antecedent wetness conditions.

Uncover(s)(ed)(ing) – means the removal of ground cover from, on, or above the soil surface.

Undertaken – means the initiating of an activity, or phase of activity, which results or will result in a change in the ground cover or topography of a tract.

Velocity(ies) – means the average speed of flow through the cross section of the main channel at the peak flow of the storm of interest. The cross section of the main channel shall be that area defined by the geometry of the channel plus the area of flow below the flood height defined by vertical lines at the main channel banks. Overload flows are not to be included for the purpose of computing velocity of flow.

Waste – means surplus materials resulting from on-site construction and disposed of at locations either on or off site other than the initial source of the materials.

Watershed – means the region drained by or contributing water to a stream, lake or other body of water.

Working Days – means days exclusive of Saturday and Sunday during which weather conditions or soil conditions permit land-disturbing activity to be undertaken.

159.04 EXCLUSIONS.

This Section shall not apply to the following land-disturbing activities:

1) Activities, including the production and activities relating or incidental to the production of crops, grains, fruits, vegetables, ornamental and flowering plants, dairy, livestock, poultry, and all other forms of agriculture undertaken on agricultural land for the production of plants and animals useful to man, including, but not limited to:
   a. Forages and sod crops, grains and feed crops, tobacco, cotton, and peanuts.
   b. Dairy animals and dairy products.
   c. Poultry and poultry products.
   d. Livestock, including beef cattle, llamas, sheep, swine, horses, ponies, mules, and goats.
   e. Bees and apiary products.
   f. Fur producing animals.
   g. Mulch, ornamental plants, and other horticultural products. For purposes of this section, "mulch" means substances composed primarily of plant remains or mixtures of such substances.

(2) Activities undertaken on forestland for the production and harvesting of timber and timber products and conducted in accordance with best management practices set out in Forest Practice Guidelines Related to Water Quality, as adopted by the Department.

(3) Activities for which a permit is required under the Mining Act of 1971, Article 7 of

Chapter 74 of the General Statutes.

(4) For the duration of an emergency, activities essential to protect human life, including activities specified in an executive order issued under G.S. 166A-19.30(a)(5).

(5) Activities undertaken to restore the wetland functions of converted wetlands to provide compensatory mitigation to offset impacts permitted under Section 404 of the Clean Water Act.

(6) Activities undertaken pursuant to Natural Resources Conservation Service standards to restore the wetlands functions of converted wetlands as defined in Title 7 Code of Federal Regulations § 12.2

159.05 GENERAL REQUIREMENTS AND OBJECTIVES.

(A) Plan Required. No Person shall initiate any land-disturbing activity which uncovers more than twelve thousand (12,000) square feet of land for commercial, industrial, or subdivision development without having a plan approved by the Erosion Control Inspector. Land-disturbing activities resulting from single-family residential development on an individual lot which disturbs one (1) acre of land or less are excluded from plan submittal and approval, provided that erosion control devices are installed in accordance with the details for residential lot development found in the Town of Waxhaw Engineering, Standards and Procedures Manual. Single-family residential development exceeding one (1) acre of land disturbed will be required to submit for plan approval. Land-disturbing activities resulting from single-family residential development on multiple contiguous lots which disturb a total of one (1) acre of land or less may conduct such activity with a single approved plan encompassing all the lots or with separate approved ESC Installation and Maintenance Agreements for each lot.

(B) ESC Installation and Maintenance Agreement Required. No person shall initiate any Land-Disturbing Activity for the purpose of new single-family residential development on an individual lot to a maximum of one (1) acre, without having an ESC Installation and Maintenance Agreement approved by the Erosion Control Inspector.

(C) Protection of Property. Persons conducting land-disturbing activity shall take all reasonable measures to protect all public and private property from damage caused by such activity.

(D) Basic Control Objectives. A plan may be disapproved pursuant to Section 159.16 of this Ordinance if the plan fails to address the following control objectives:

(1) Identify Critical Areas – On-site areas which are subject to severe erosion, and off- site areas which are especially vulnerable to damage from erosion and/or sedimentation, are to be identified and receive special attention.

(2) Limit Time of Exposure – All land-disturbing activity is to be planned and conducted to limit exposure to the shortest feasible time.

(3) Limit Exposed Areas – All land-disturbing activity is to be planned and conducted to minimize the size of the area to be exposed at any one time.

(4) Control Surface Water – Surface water runoff originating upgrade of exposed areas should be controlled to reduce erosion and sediment loss during the period of exposure.

(5) Control Sedimentation – All land-disturbing activity is to be planned and conducted so as to prevent off-site sedimentation damage.

(6) Manage Storm Water Runoff – When the increase in the velocity of storm water runoff resulting from a land-disturbing activity is sufficient to cause accelerated erosion of the receiving watercourse, plans are to include measures to control the velocity to the point of discharge so as to minimize accelerated erosion of the site and increased sedimentation of the stream.

159.06 MANDATORY STANDARDS FOR LAND DISTURBING ACTIVITIES.
No land-disturbing activity subject to the control of this Ordinance shall be undertaken except in accordance with the following mandatory standard:

(A) Buffer Zone.

(1) No land-disturbing activity during periods of construction or improvement to land shall be permitted in proximity to a lake or natural watercourse unless a buffer zone is provided along the margin of the watercourse of sufficient width to confine visible siltation within the twenty-five percent (25%) of the buffer zone nearest the land- disturbing activity.

(2) Unless otherwise provided, the width of the buffer zone begins and is measured landward from the normal pool elevation of impounded structures (lakes) to the nearest edge of the disturbed area and/ or five feet from the edge of the top of the bank of streams or rivers to the nearest edge of the disturbed area. Natural or artificial means of confining visible siltation must be placed, constructed or installed outside the undisturbed buffer zone.

(3) For any watercourse, where more than one stream buffer width is imposed by Town of Waxhaw Code of Ordinance or other local, state or federal law(s), rule(s), or regulation(s), the greater buffer width stipulated shall apply.

(B) Graded Slopes and Fills. The angle for graded slopes and fills shall be no greater than the angle which can be retained by vegetative cover or other adequate erosion control devices or structures. In any event, slopes left exposed will, within 14 calendar days of completion of any phase of grading, be planted or otherwise be provided with ground cover, devices, or structures sufficient to restrain erosion.

(C) Ground Cover. Whenever more than one (1) acre of land is uncovered or new residential development on an individual lot is initiated, the person conducting the land-disturbing activity shall install such sedimentation and erosion control devices and practices as are sufficient to retain the sediment generated by the land-disturbing activity within the boundaries of the tract during construction upon and development of said tract, and shall plant or otherwise provide a permanent ground cover sufficient to restrain erosion after completion of construction or development. Provisions for a ground cover sufficient to restrain erosion must be accomplished within 15 working days or 60 calendar days, whichever is shorter following completion of construction or

development.

(D) Prior Plan Approval . No Person shall initiate any land-disturbing activity on a tract if more than one (1) acre of land is to be uncovered, excluding single- family residential development in accordance with Subsection 159.05(B), unless, thirty or more days prior to initiating the activity, a plan is filed with and approved by the Erosion Control Inspector. The Erosion Control Inspector shall forward to the North Carolina Director of the Division of Water Quality a copy of each plan for a land-disturbing activity that involves the utilization of ditches for the purpose of de watering or lowering the water table of the tract.

(E) Zoning Permits. Any person requesting a grading permit in association with a land- disturbing activity on a tract which involves the uncovering of more than twelve thousand (12,000) square feet of land or new residential development on an individual lot, shall be required to have an approved Erosion and Sedimentation Control Plan or ESC Installation and Maintenance Agreement in accordance with this Ordinance.

159.07 DESIGN AND PERFORMANCE STANDARDS.
Erosion and sedimentation control measures, structures, and devices shall be so planned, designed, and constructed as to provide protection from the calculated maximum peak rate of storm water runoff from the ten-year storm. Storm water runoff rates shall be calculated using the procedures in the USDA, Natural Resources Conservation Service's "National Engineering Field Manual for Conservation Practices," or other acceptable calculation procedures.

159.08 STORMWATER OUTLET PROTECTION.

(A) Persons shall conduct land-disturbing activity so that the post-construction velocity of the ten-year storm runoff in the receiving watercourse to the discharge point does not exceed the greater of:

(1) The velocity established in Table 159.08-1 of this Section; or

(2) The velocity of the ten-year storm runoff in the receiving watercourse prior to the land-disturbing activity.

(B) If the conditions of Section 159.08 (A) cannot be met, then the receiving watercourse to and including the discharge point shall be designed and constructed to withstand the expected velocity anywhere the velocity exceeds the "prior to land-disturbing activity" velocity by ten percent (10%).

(C) Acceptable Management Measures. Measures applied alone or in combination to satisfy the intent of this section are acceptable if there are no objectionable secondary consequences. The Town recognizes that the management of storm water runoff to minimize or control downstream channel and bank erosion is a developing technology. Innovative techniques and ideas will be considered and may be used when shown to have the potential to produce successful results. Some alternatives are to:

(1) Avoid increases in surface runoff volume and velocity by including measures to promote

infiltration to compensate for increased runoff from areas rendered impervious.

(2) Avoid increases in storm water runoff discharge velocities by using vegetated or roughened swales and waterways in lieu of closed drains and high velocity paved sections.

(3) Provide energy dissipaters at outlets of storm drainage facilities to reduce flow velocities to the point of discharge. These may range from simple rip-rapped sections to complex structures.

(4) Protect watercourses subject to accelerated erosion by improving cross sections and/or providing erosion-resistant lining.

(D) Exceptions. This rule shall not apply where it can be demonstrated that storm water discharge velocities will not create an erosion problem in the receiving watercourse.

(E) Maximum permissible velocity for storm water discharges shall be regulated in accordance with Table 159.08-1.

Table 159.08-1 Maximum Permissible Velocities

Material	Feet/ Second	Meters/ Second
Fine sand (noncolloidal)	**2.5**	**0.8**
Sandy loam (noncolloidal)	**2.5**	**0.8**
Silt loam (noncolloidal)	**3.0**	**0.9**
Ordinary firm loam	**3.5**	**1.1**
Fine gravel	**5.0**	**1.5**
Stiff clay (very colloidal)	**5.0**	**1.5**
Graded, loam to cobbles (noncolloidal)	**5.0**	**1.5**
Graded, silt to cobbles (colloidal)	**5.5**	**1.7**
Alluvial silts (noncolloidal)	**3.5**	**1.1**
Alluvial silts (colloidal)	**5.0**	**1.5**
Coarse gravel (noncolloidal)	**6.0**	**1.8**
Cobbles and shingles	**5.5**	**1.7**
Shales and hard pans	**6.0**	**1.8**

159.09 BORROW AND WASTE AREAS.

When the Person conducting the land-disturbing activity is also the person conducting the borrow or waste disposal activity, areas from which borrow is obtained and which are not regulated by the provisions of the Mining Act of 1971, and waste areas for surplus materials other than landfills regulated by the North Carolina Department of Environment and Natural Resources's Division of Solid Waste Management, shall be considered as part of the land- disturbing activity where the borrow material is being used or from which the waste material originated. When the person conducting the land-disturbing activity is not the person obtaining the borrow and/or disposing of the waste, these areas shall be considered a separate land- disturbing activity.

159.10 ACCESS AND HAUL ROADS.
Temporary access and haul roads, other than public roads, constructed or used in connection with any land-disturbing activity shall be considered a part of such activity.

159.11 OPERATIONS IN LAKES OR NATURAL WATERCOURSES.
Land-disturbing activity in connection with construction in, on, over, or under a lake or natural watercourse shall be planned and conducted in such a manner as to minimize the extent and duration of disturbance of the stream channel. The relocation of a lake, stream or other watercourse where relocation is an essential part of the proposed activity, shall be planned and executed so as to minimize changes in the lake, stream or other watercourse flow characteristics, except when justification acceptable to the Town for significant alteration to flow characteristic is provided.

159.12 RESPONSIBILITY FOR MAINTENANCE.
During the development of a site, the person conducting the land-disturbing activity shall install and maintain all temporary and permanent erosion and sedimentation control measures as required by the approved plan or any provision of this Ordinance or the Act, or any order adopted pursuant to this Ordinance or the Act. After site development, the landowner or person in possession of the land shall install and/or maintain all necessary permanent erosion and sediment control measures, except those measures installed within a road or street right-of-way or easement accepted for maintenance by a governmental agency.

159.13 ADDITIONAL MEASURES.
Whenever the Erosion Control Inspector determines that significant sedimentation is occurring as a result of land-disturbing activity, despite application and maintenance of protective practices, the person conducting the land-disturbing activity will be required to and shall take additional protective action.

159.14 EXISTING UNCOVERED AREAS.

(A) All uncovered areas existing on the effective date of this Ordinance which resulted from land-disturbing activity which exceed one (1) acre of land, that are subject to continued accelerated erosion and are causing off-site damage from sedimentation, shall be provided with a ground cover or other protective measures, structures, or devices sufficient to restrain accelerated erosion and control off-site sedimentation.

(B) The Erosion Control Inspector will serve upon the landowner or other person in possession or control of that land a written notice of violation by registered or certified mail, return receipt requested, or other means reasonably calculated to give actual notice. The notice will set forth the measures needed to comply, and will state the time within which such measures must be completed. In determining the measures required and the time allowed for compliance, the Erosion Control Inspector shall take into consideration the economic feasibility, technology, and quantity of work required, and shall set reasonable and attainable time limits of compliance.

(C) The Erosion Control Inspector reserves the right to require preparation and approval of a plan in any instance where extensive control measures are required.

159.15 PERMITS.

(A) No person shall undertake any land-disturbing activity subject to this Ordinance without having first obtained a Plan Certificate and Letter of Approval or ESC Installation and Maintenance Agreement Approval from the Erosion Control Inspector, except that no Plan Certificate and Letter of Approval or ESC Installation and Maintenance Agreement Approval shall be required for any Land-Disturbing Activity:

(1) For the purpose of fighting fires; or
(2) For the stock piling of raw or processed sand, stone, or gravel in material processing plants and storage yards, provided that sediment control measures have been utilized to protect against off-site damage; or
(3) That does not disturb more than one (1) acre in surface area.
In determining the area, lands under one or diverse ownership being developed as a unit will be aggregated.

(B) Although a Plan Certificate and Letter of Approval is not required for land-disturbing activity comprising less than one (1) acre for residential projects, such activity shall be subject to all other requirements of this Ordinance and any other applicable standards or ordinances adopted by the Town of Waxhaw.

(C) Submittals for erosion and sediment control plan approval and erosion control inspections shall be subject to any and all relevant fees as adopted by the Board of Commissioners and prescribed in the Town of Waxhaw Code of Ordinances. Fees shall accompany plan submittals, otherwise the submittal shall be determined incomplete and shall be returned to the applicant.

159.16 EROSION AND SEDIMENTATION CONTROL PLANS.

(A) Persons conducting land-disturbing activity shall be responsible for preparing a plan for all land-disturbing activities subject to this Ordinance whenever the proposed activity is to be undertaken on a tract disturbing more than one (1) acre of land, excluding single-family residential development addressed in Section 159.05 (B).

(B) Seven complete copies of the plan shall be filed with the Control Inspector in the office of the Town of Waxhaw Development Services Department at least 30 days prior to the commencement of the proposed activity. A fee, made payable to the Town of Waxhaw, shall be charged for each plan review. Such fee shall be in accordance with a fee schedule adopted by the Town of Waxhaw Board of Commissioners. No plan shall be considered complete unless accompanied by such fee and a performance bond in the form of a certified check, cash or irrevocable letter of credit, in an amount deemed sufficient by the Engineering Department to cover all costs of protection or other improvements required to establish protective cover on the site in conformity with this ordinance. The performance bond shall remain effective until work has been completed, inspected and approved by the Development Services Department.

(C) The Erosion Control Inspector shall transmit a copy of the complete plan to the Union Soil and

Water Conservation District (SWCD) for their review. The SWCD shall be given up to twenty (20) days to make comment on the plan. Failure of the SWCD to submit its comments to the Erosion Control Inspector within such time period shall not delay final action on the proposed plan by the Erosion Control Inspector.

(D) The Erosion Control Inspector shall render a decision on a plan within thirty (30) days of submittal. The Erosion Control Inspector shall condition approval of a draft plan upon the applicants' compliance with local, state and federal water quality laws, regulations, ordinances and rules. Such decision shall be approval, approval with modifications, approval with performance reservations, or disapproval. Failure to approve, approve with modifications or performance reservations, or disapprove a complete plan within thirty (30) days of receipt shall be deemed approval.

(E) Any final decision made pertaining to the proposed plan shall be filed in the Town of Waxhaw Development Services Department (or as otherwise designated by the Town) and sent to the applicant by first class mail.

(F) Denial of a plan or a revised plan must specifically state in writing the reasons for disapproval. The Erosion Control Inspector must approve, approve with modifications, or disapprove a revised plan within fifteen (15) days of receipt, or it is deemed to be approved.

(G) Plan approval shall expire three (3) years following the date of approval, if no land- disturbing activity has been undertaken, or if no land-disturbing activity has occurred with three (3) years. If, following commencement of a land-disturbing activity pursuant to an approved plan, the Erosion Control Inspector determines that the plan is inadequate to meet the requirements of this ordinance, the Erosion Control Inspector may require any revision of the plan that is necessary to comply with this ordinance.

(H) Persons conducting land-disturbing activities which are addressed by Section 159.16 shall have secured a Plan Certificate and Letter of Approval (in accordance with procedures described herein) before any land-disturbing activities commence. A copy of the approved plan and the Certificate of Plan Approval shall be maintained at the job site by the persons conducting the land-disturbing activity. After approving the plan, if the Erosion Control Inspector, either upon review of such plan or on inspection of the job site, determines that a significant risk of accelerated erosion or off-site sedimentation exists, the Inspector may require that a revised plan be submitted. Pending the preparation and approval of the revised plan, work shall cease or shall continue under conditions outlined by the Erosion Control Inspector.

(I) A plan may be disapproved unless accompanied by an authorized statement of financial responsibility and ownership. This statement shall be signed by the person financially responsible for the land-disturbing activity or their attorney-in-fact. The statement shall include the mailing and street addresses of the principal place of business of the person financially responsible and of the owner of the land or their registered agents. If the person financially responsible is not a resident of North Carolina, a North Carolina agent must be designated in the statement for the purpose of receiving notice of compliance or non-compliance with the plan, the Act, this ordinance, or rules or orders adopted or issued pursuant to this ordinance. If the applicant is not the owner of the land

to be disturbed, the draft erosion and sedimentation control plan must include the owner's written consent for the applicant to submit a draft erosion and sedimentation control plan and to conduct the anticipated land disturbing activity.

(J) The person submitting a plan to the Erosion Control Inspector is, prior to submission of the plan, solely and exclusively responsible for determining whether the proposed land-disturbing activities require any form of state or federal environmental certification or documentation. Any plan submitted for a land-disturbing activity for which an environmental document is required by the North Carolina Environmental Policy Act (G.S. 113A-1, et seq.) shall be deemed incomplete until a complete environmental document is available for Town review. The Erosion Control Inspector, upon discovery that an environmental certification or documentation is required but was not obtained, shall promptly notify the person submitting the plan that the thirty (30) day time limit for review of the plan pursuant to Section 159.16 (D) of this Ordinance shall not begin until a complete environmental document or certificate is available for review by the Erosion Control Inspector. However, no term or condition in the Ordinance shall be interpreted to place the burden for determining the necessity for an environmental certificate or documentation upon the Erosion Control Inspector, and the person submitting the plan, as well as any other persons specified by law, rule or regulation, shall remain solely and exclusively responsible for such determination.

(K) The plan required by this section shall contain architectural and engineering drawings, maps, assumptions, calculations, and narrative statements as needed to adequately describe the proposed development of the tract and the measures planned to comply with the requirements of this Ordinance. Any erosion and sediment control measures and/or devices must be drawn to scale and contour when deemed applicable by the Erosion Control Inspector. Plan content may vary to meet the needs of specific site requirements. Detailed guidelines for plan preparation shall be found in the Town of Waxhaw Engineering, Standards and Procedures Manual. The Erosion Control Inspector shall automatically disapprove a plan if it is determined that implementation of the plan would result in a violation of rules adopted by the Environmental Management Commission to protect riparian buffers along surface waters.

(L) A plan may be disapproved upon a finding that an applicant, or a parent, subsidiary, or other affiliate of the applicant:

(1) Is conducting or has conducted land-disturbing activity without an approved plan, or has received notice of violation of a plan previously approved by the NCSCC or the Town pursuant to the Act and has not complied with the notice within the time specified in the notice.

(2) Has failed to pay a civil penalty assessed pursuant to the Act or a local ordinance adopted pursuant to the Act by the time the payment is due.

(3) Has been convicted of a misdemeanor pursuant to G.S. 113A-64(b) or any criminal provision of a local ordinance adopted pursuant to the Act; or

(4) Has failed to substantially comply with applicable local, State or Federal laws, regulations, rules or ordinances adopted pursuant to the Act. For purposes of this subsection 159.16 (L), an

applicant's record may be considered for only the two (2) years prior to the application date.

(M) Applications for amendment of a plan in written and/or graphic form may be made at any time under the same format as the original application. Until such time as said amendment is approved by Erosion Control Inspector, land-disturbing activity shall not proceed except in accordance with the plan as originally approved.

(N) Any person engaged in land-disturbing activity who fails to file a plan in accordance with this Ordinance, or who conducts a land-disturbing activity except in accordance with provisions of an approved plan shall be deemed in violation of this Ordinance.

159.17 TRANSFER OF PLANS.

(A) The Town of Waxhaw may transfer a plan if all of the following conditions are met:
(1) The successor-owner of the property submits to the local government a written request for the transfer of the plan and an authorized statement of financial responsibility and ownership.
(2) The local government finds all of the following:

a. The plan holder is one of the following:

(i) A natural person who is deceased.

(ii) A partnership, limited liability corporation, corporation, or any other business association that has been dissolved.

(iii) A person who has been lawfully and finally divested of title to the property on which the permitted activity is occurring or will occur.

(iv) A person who has sold the property on which the permitted activity is occurring or will occur.

b. The successor-owner holds title to the property on which the permitted activity is occurring or will occur.

c. The successor-owner is the sole claimant of the right to engage in the permitted activity.

d. There will be no substantial change in the permitted activity.

(B) The plan holder shall comply with all terms and conditions of the plan until such time as the plan is transferred.
(C) The successor-owner shall comply with all terms and conditions of the plan once the plan has been transferred.
(D) Notwithstanding changes to law made after the original issuance of the plan, the local government may not impose new or different terms and conditions in the plan without the prior express consent of the successor-owner. Nothing in this subsection shall prevent the local government from requiring a revised plan pursuant to Section 159.16(G).

(E) Denials of transfer requests may be appealed pursuant to Section 159.22(A)

159.18 INSPECTIONS AND INVESTIGATIONS.

(A) The Erosion Control Inspector will periodically inspect land-disturbing activities to ensure compliance with the Act, this ordinance, or rules or orders adopted or issued pursuant to this ordinance, and to determine whether the measures required in the plan are effective in controlling erosion and sediment resulting from land-disturbing activity. Notice of the right to inspect shall

be included in the certificate of approval of each plan. The landowner, the financially responsible party, or the landowner's or the financially responsible party's agent shall perform an inspection of the area covered by the plan after each phase of the plan has been completed and after establishment of temporary ground cover in accordance with 159.06 (C). The person who performs the inspection shall maintain and make available a record of the deviation from the approved erosion control plan, identify any measures that may be required to correct the deviation, and document the completion of those measures. The record shall be maintained until permanent ground cover has been established as required by the approved erosion and sedimentation control plan.

(B) No person shall willfully resist, delay, or obstruct the Erosion Control Inspector, while inspecting or attempting to inspect a land-disturbing activity under this section.

(C) If it is determined that a person engaged in the land-disturbing activity has failed to comply with the Act, this Ordinance, or rules, or orders adopted or issued pursuant to this Ordinance, or has failed to comply with an approved plan, a notice of violation shall be served upon that person. The notice shall be served by registered or certified mail or by any means authorized under GS 1A-1, Rule 4. The Notice of Violation shall specify a date by which**,** or a cure period within which, the person must comply with this Ordinance, and inform the person of the actions that need to be taken to comply with this Ordinance. The Notice shall set forth the measures necessary to achieve compliance with the plan, specify a reasonable time period within which such measures shall be completed, and warn that failure to correct the violation within the time period stated is subject to a civil penalty and other enforcement actions. However, no time period for compliance need be given for failure to submit a plan for approval, for obstructing, hampering or interfering with an authorized representative while in the process of carrying out his official duties, or for the penalty that may be assessed pursuant to this Ordinance for the day the violation is assessed by the Erosion Control Inspector. Any person who fails to comply within the time specified in the Notice is subject to additional civil and criminal penalties for a continuing violation as provided in this Ordinance.

If the person engaged in the land-disturbing activity has not received a previous notice of violation under this section, the Erosion Control Inspector shall deliver the notice of violation in person and shall offer assistance in developing corrective measures. Assistance may be provided by referral to a technical assistance program in the Department, referral to a cooperative extension program, or by the provision of written materials such as Department guidance documents. If the Erosion Control Inspector is unable to deliver the notice of violation in person within 15 days following discovery of the violation, the notice of violation may be served in the manner prescribed for service of process by G.S. 1A-1, Rule 4, and shall include information on how to obtain assistance in developing corrective measures.

(D) The Erosion Control Inspector shall have the power to conduct such investigation as may be reasonably deemed necessary to carry out duties as prescribed in this ordinance, and for this purpose to enter at reasonable times upon any property, public or private, for the purpose of investigating and inspecting the sites of any land-disturbing activity. No person shall refuse entry or access to the Erosion Control Inspector who requests entry for purposes of inspection, and who presents appropriate credentials, nor shall any person obstruct, hamper, or interfere with any such representative while in the process of carrying out their official duties as provided in this Ordinance.

(E) The Erosion Control Inspector shall also have the power to require written statements, or the filing of reports under oath, with respect to pertinent questions relating to land-disturbing activity.

(F) On any tract on which five (5) or more acres are disturbed, the person conducting land-disturbing activity will be responsible for self-inspection of erosion and sedimentation control facilities at least once every seven (7) days or within 24 hours of a storm event of greater than 0.5 inches of rain per 24-hour period.

159.19 PENALTIES; STOP WORK ORDERS .

(A) Civil Penalties.

(1) Any person who violates any of the provisions of the applicable State, Federal or local laws, rules, regulations or ordinances, including this Ordinance, or rules or orders adopted or issued pursuant to applicable State, Federal or local laws, rules, regulations or ordinances, including this Ordinance, or who initiates or continues a
land-disturbing activity for which an erosion and sedimentation control plan is required except in accordance with the terms, conditions, and provisions of an approved plan, is subject to a civil penalty. The maximum civil penalty for a violation is five thousand dollars ($5,000). A civil penalty may be assessed from the date of the violation. Each day of a continuing violation shall constitute a separate violation. When the person has not been assessed any civil penalty under this subsection for any previous violation and that person abated continuing environmental damage resulting from the violation
within 180 days from the date of the notice of violation, the maximum cumulative total civil penalty assessed under this subsection for all violations associated with the land- disturbing activity for which the erosion and sedimentation control plan is required is twenty-five thousand dollars ($25,000).

(2) The Erosion Control Inspector shall determine the amount of the civil penalty and shall notify the person who is assessed the civil penalty of the amount of the penalty, the reason for assessing the penalty, the option available to that person to request a remission of the civil penalty under G.S. 113A-64.2, the date of the deadline for that person to make the remission request regarding this particular penalty, and, when that person has not been assessed any civil penalty under this section for any previous violation, the date of the deadline for that person to abate continuing environmental damage resulting from the violation in order to be subject to the maximum cumulative total civil penalty under subdivision (1) of this subsection. The notice of assessment shall be served by any means authorized under G.S 1A-1, Rule 4, and shall direct the violator to either pay the assessment or contest the assessment within 30 days by filing a petition for a contested case under Article 3 of Chapter 150B of the General Statutes. If a violator does not pay a civil penalty assessed by the Town of Waxhaw within 30 days after it is due, the Erosion Control Inspector may institute a civil action to recover the amount of the assessment. The civil action may be brought in the superior court of any county where the violation occurred or the violator's residence or principal place of business is located. A civil action must be filed within three years of the date the assessment was due. An assessment that is not contested is due when the violator is served with a notice of assessment. An assessment that is contested is

due at the conclusion of the administrative and judicial review of the assessment.

(3) In determining the amount of the penalty, items which may be considered are the degree and extent of harm caused by the violation, the cost of rectifying the damage, the amount of money the violator saved by non-compliance, whether the violation was committed willfully and the prior record of the violator in complying with or failing to comply with this Ordinance.

(4) The clear proceeds of civil penalties collected by the Town must be remitted to the Civil Penalty and Forfeiture Fund in accordance with G.S 115C-457.2.

(B) Criminal Penalties. Any Person who knowingly or willfully violates any provision of this Ordinance, or rule, regulation or order adopted or issued pursuant to this Ordinance, or who knowingly or willfully initiates or continues a land-disturbing activity for which a plan is required, except in accordance with the terms, conditions, and provisions of an approved plan, shall be guilty of a Class 2 misdemeanor which may include a fine not to exceed $5,000.00.

(C) Stop Work Orders

(1) The Erosion Control Inspector may issue a stop-work order if he finds that a land-disturbing activity is being conducted in violation of this Section or of any rule adopted or order issued pursuant to this Section, that the violation is knowing and willful, and that either:

(a) Off-site sedimentation has eliminated or severely degraded a use in a lake or natural watercourse or that such degradation is imminent.
(b) Off-site sedimentation has caused severe damage to adjacent land or that such damage is imminent.
(c) The land-disturbing activity is being conducted without an approved plan.

(2) The stop-work order shall be in writing and shall state what work is to be stopped and what measures are required to abate the violation. The order shall include a statement of the findings made by the Town of Waxhaw pursuant to subsection (a) of this section, and shall list the conditions under which work that has been stopped by the order may be resumed. The delivery of equipment and materials which does not contribute to the violation may continue while the stop-work order is in effect. A copy of this section shall be attached to the order.

(3) The stop-work order shall be served by the sheriff of Union County or by some other person duly authorized by law to serve process as provided by G.S. 1A-1, Rule 4, and shall be served on the person at the site of the land-disturbing activity who is in operational control of the land-disturbing activity. The sheriff or other person duly authorized by law to serve process shall post a copy of the stop-work order in a conspicuous place at the site of the land-disturbing activity. The Town of Waxhaw shall also deliver a copy of the stop-work order to any person that the Town of Waxhaw has reason to believe may be responsible for the violation.

(4) The directives of a stop-work order become effective upon service of the order. Thereafter, any person notified of the stop-work order who violates any of the directives set out in the order may be assessed a civil penalty as provided in Section 159.18(A). A stop-work order issued pursuant to this section may be issued for a period not to exceed five days.

(5) The Erosion Control Inspector shall designate an employee (which may be the Erosion Control Inspector) to monitor compliance with the stop-work order. The name of the employee so designated shall be included in the stop-work order. The employee so designated, or the Erosion Control Inspector, shall rescind the stop-work order if all the violations for which the stop-work order are issued are corrected, no other violations have occurred, and all measures necessary to abate the violations have been taken. The Erosion Control Inspector shall rescind a stop-work order that is issued in error.

(6) The issuance of a stop-work order shall be a final agency decision subject to judicial review in the same manner as an order in a contested case pursuant to Article 4 of Chapter 150B of the General Statutes. The petition for judicial review shall be filed in the superior court of the county in which the land- disturbing activity is being conducted.

(7) As used in this section, days are computed as provided in G.S. 1A-1, Rule 6.

(8) The Attorney for the Town of Waxhaw shall file a cause of action to abate the violations which resulted in the issuance of a stop-work order within two business days of the service of the stop-work order. The cause of action shall include a motion for an ex parte temporary restraining order to abate the violation and to effect necessary remedial measures. The resident superior court judge, or any judge assigned to hear the motion for the temporary restraining order, shall hear and determine the motion within two days of the filing of the complaint. The clerk of superior court shall accept complaints filed pursuant to this section without the payment of filing fees. Filing fees shall be paid to the clerk of superior court within 30 days of the filing of the complaint.

159.20 INJUNCTIVE RELIEF.

(A) Whenever the Erosion Control Inspector has reasonable cause to believe that any person is violating or threatening to violate this Ordinance or any term, condition, or provision of an approved plan, he/ she may, either before or after the institution of any other action or proceeding authorized by this Ordinance, institute a civil action for injunctive relief to restrain the violation or threatened violation. The action shall be brought in the superior court in Union County.

(B) Upon determination by a court that an alleged violation is occurring or is threatened, the court shall enter any order of judgment that is necessary to abate the violation, to ensure that restoration is performed, or to prevent the threatened violation. The institution of an action for injunctive relief under this section shall not relieve any party to the proceedings from any civil or criminal penalty prescribed for violations of this Ordinance.

159.21 RESTORATION OF AREAS AFFECTED BY FAILURE TO COMPLY.

The Erosion Control Inspector may require a person who engaged in a land- disturbing activity and failed to retain sediment generated by the activity as required by subsection 159.06 (C) to restore the waters and land affected by the failure so as to minimize the detrimental effects of the resulting pollution by sedimentation. This authority is in addition to any other civil or criminal penalty or injunctive relief authorized under this Ordinance.

159.22 APPEALS.

Procedures which constitute the appeals process, related to the following actions:

(A) Plan Approval With Modifications or Plan Disapproval. The appeal of an approval, approval with modifications or disapproval of a plan made by the Erosion Control Inspector with regard to this Ordinance shall be governed by the following provisions:

(1) The order of approval, disapproval, or modification of any proposed Plan made by the Erosion Control Inspector shall entitle the Person challenging such decision to a public hearing before the Town of Waxhaw Board of Adjustment if such Person submits written demand for a hearing and completes the necessary forms and pays the required appeals fee within fifteen (15) days following the date the decision was filed in the Town of Waxhaw Development Services Department office or mailed to the applicant, whichever date is later. Such written request and completed forms shall be submitted to the Clerk of the Board of Adjustment or his designee. Forms shall be available at the Town of Waxhaw Town Hall, or as directed by the Erosion Control Inspector. A fee for such public hearing shall be in accordance with a fee schedule adopted by the Town of Waxhaw Board of Commissioners. No request shall be considered complete unless accompanied by such fee.

(2) Notice of the Board of Adjustment public hearing shall be sent by first class mail to the applicant at least ten (10) days prior to the public hearing and to any person who has submitted written request to receive such notice at least ten (10) days prior to the date of the public hearing. The hearing shall be held no later than thirty (30) days after the date of receipt of said written request.

(3) A hearing shall be conducted by the Board of Adjustment. A concurring vote per the Board of Adjustment's officially adopted by-laws will be necessary to reverse any order, requirement, decision, or determination of any official charged with the enforcement of this Ordinance, or to decide in favor of an appellant any matter upon which is required to pass or to grant variance from the provisions of this Ordinance. The Town shall keep minutes of the proceedings, showing the votes of each member upon each question and the attendance of each member at such hearings. The final disposition of the Town shall be based on findings of fact.

(4) A party dissatisfied with the decision of the Board of Adjustment following the public hearing shall appeal such decision to the NCSCC pursuant to Title 15, Chapter 4B, Section .0018(d) of the North Carolina Administrative Code and as provided by NC GS 113A-61(c)

B) Plan Disapproval Due To Prior Violation, Unpaid Penalties, or Non-compliance. In the event that a plan is disapproved pursuant to Subsection 159.16 (L) of this Ordinance, the Town of Waxhaw Control Inspector shall notify the Director of the Division of Land Resources of such disapproval, along with the reasons therefore, within ten (10) days after the date of the decision. The Erosion Control Inspector shall advise the applicant and the Director of the Division of Land Resources in writing as to the specific reasons that the plan was disapproved. The applicant may appeal the Erosion Control Inspector's disapproval of the plan pursuant to Subsection 159.16 (L) of this Ordinance directly to the NCSCC.

(C) Issuance of Notice of Violation, Penalties, or Order of Restoration. The appeal of Issuance of Notice of Violation, Assessment of Civil Penalty, or Order of Restoration made by the Town of Waxhaw with regard to this Ordinance shall be governed by the following provisions:

(1) The issuance of a notice of violation, assessment of a civil penalty, or an order of restoration by the Erosion Control Inspector shall entitle the person alleged to be in violation of the Ordinance (petitioner) to appeal within thirty days by filing a petition for a contested case with the State Office of Administrative Hearings under Article 3 of Chapter 150B.

159.23 SEVERABILITY. If any section or specific provision or standard of this ordinance is found by a court to be unconstitutional or invalid for any reason, the decision of the court shall not affect the validity of any other section, provision, or standard of these regulations, except the provision in question. The other portions of these regulations not affected by the decision of the court shall remain in full force and effect.

159.24 EFFECTIVE DATE. This ordinance shall become effective upon approval of the North Carolina Sedimentation Control Commission.

Attest:

Melody Shuler, Town Clerk	Stephen E. Maher, Mayor

APPENDIX-L

EROSION CONTROL FINANCIAL RESPONSIBILITY FORM

No person may initiate any land-disturbing activity as defined in Chapter 159 of the Town of Waxhaw Town Code prior to completion of this form, and an applicable and acceptable erosion and sedimentation control plan has been approved by the Development Services Department. (Please type or print)

Part I

Name of Project:_____

Address where land disturbing activity will take place: _____
_____
_____
_____

Approximate date disturbing activity will commence: _____

Purpose of development (residential, commercial, industrial, etc.): _____

Total acreage of land to be disturbed or uncovered: _____

Amount of fee enclosed (show calculation): _____
_____
_____

Agent to contact should sediment control issues arise during land disturbing activity:

Name: _____
Address: _____
State: _____Zip code:_____
Phone: _____Email:_____

Landowner(s):

Name: _____
Address: _____
State: _____Zip code:_____
Phone: _____Email:_____

Name: _____
Address: _____
State: _____Zip code:_____
Phone: _____Email:_____

Indicate Book and Page where deed of the property where land disturbing activity will take place is recorded:

Book: _____Page: _____
Book: _____Page: _____

APPENDIX-L

EROSION CONTROL FINANCIAL RESPONSIBILITY FORM

Book: _____ Page: _____

Book: _____ Page: _____

Indicate tax map and parcel number of the property where land disturbing activity will take place is recorded:

Tax Map:_____ Parcel: _____
Tax Map:_____ Parcel: _____
Tax Map:_____ Parcel: _____
Tax Map: Parcel: _____

Part II

Person(s) or firm(s) who are financially responsible for the land disturbing activity:

Name: _____
Address: _____
State: _____ Zip code:_____
Phone: _____ Email:_____

Name: _____
Address: _____
State: _____ Zip code:_____
Phone: _____ Email:_____

Name: _____
Address: _____
State: _____ Zip code:_____
Phone: _____ Email:_____

If the financially responsible party is not a resident of North Carolina, give the name and address of a North Carolina Agent:

Name: _____
Address: _____
State: _____ Zip code:_____
Phone: _____ Email:_____

If the financially responsible party is a partnership or other person engaging in business under an assumed name, attach a copy of the Certificate of Assumed Name. If the financially responsible party is a corporation, give the name and address of the registered agent.

Name: _____
Address: _____
State: _____ Zip code:_____
Phone: _____ Email:_____

APPENDIX-L

EROSION CONTROL FINANCIAL RESPONSIBILITY FORM

The above information is true and correct to the best of my knowledge and belief and was provided by me under oath. I agree to provide corrected information should there be any change in the information provided herein. (This form must be signed by the financially responsible person if an individual or his attorney in fact, or if not an individual, by an officer, director, partner, or registered agent with authority to execute instruments for the financially responsible person)

Name: _____
Address: _____
State: _____Zip code:_____
Phone: _____Email:_____

I, _____, a Notary Public of _____ County, North Carolina, do hereby certify that _____ personally appeared before me this day, and being duly sworn, stated that in his presence _____ _____ (signed) (acknowledged the execution of) the foregoing instrument.

Witness my hand and official seal, this the _____ day of _____, 20___ .

(Official Seal) _____
Notary Public

My commission expires _____, 20___.

APPENDIX-L

Erosion Control Plan Checklist

This Erosion Control Plan Checklist shall accompany all plan submittals or the submittal shall be considered incomplete. Items not applicable should be marked "N.A." Refer to Town of Waxhaw Engineering, Standards and Procedures Manual, Title XV, Chapter 159, and NCDEQ Design Manual, latest edition. Prior to Erosion and Sedimentation Control Plan approval, all applicable plan submittals and approvals from the Department of Development Services shall be obtained, including but not limited to watershed, roadway and storm drainage, Town and State driveway permits and encroachments. All plans must be submitted concurrently with the erosion control plans.

_____Maximum plan sheet size is 24"x 36".

_____Show a north arrow and vicinity map on the erosion control plan.

_____Show a final grading plan, if different from the erosion control plan (2' contours).

_____The maximum scale is 1" = 50'.

_____Show all property lines and right-of-ways.

_____Show sidewalks in accordance with the Town of Waxhaw Engineering, Standards and Procedures Manual.

_____Show a legend. Call out each measure on the plan. The legend symbols and plan should match.

_____Show water and sewer erosion control measures on erosion control plan. Show the size and location of existing and proposed storm and sewer structures.

_____Show existing and proposed *(*2 foot or 1 foot*)* contours.

_____Show denuded areas (outline in BOLD on plans <u>and</u> note denuded acreage on plans).

_____Show planned and existing buildings locations and FFE.

_____Show planned and existing roads locations, elevations and profiles.

_____Show lot and/or building numbers.

_____Show seeps, springs, or wetland limits.

_____Show all easement lines (gas, electric, water, sewer, etc.).

_____Show boundaries of the total tract of land where disturbing activity will take place.

_____Show borrow, waste areas, and stockpiled soil locations.

APPENDIX-L

Erosion Control Plan Checklist

_____Show existing and planned drainage areas including off-site areas that drain through the project area.

_____Indicate the size of drainage areas above drainage structures.

_____Show soil type(s) and special characteristics.

_____Show design calculations for peak discharges of runoff.

_____Show a watershed plan.

_____Show a storm drainage plan.

_____Show design calculations per the Town storm water design manual.

_____Show design calculations per the Town of Waxhaw Engineering, Standards and Procedures Manual, cross-sections and method of stabilization of existing and planned channels per the NCDEQ Design Manual, latest edition.

_____Show design and construction details of energy dissipaters below storm outlets including the size of stone used for rip rap per the NCDEQ Design Manual, latest edition.

_____Show design calculations and construction details to control groundwater per the NC DENR Design Manual, latest edition.

_____Impervious Coverage:

Existing	_____	Parcel Area	_____
Proposed	_____	% Coverage	_____

_____NCDOT Driveway Permit and/or Town of Waxhaw Driveway Permit/Encroachments

_____Copies of written approvals from US Army Corps of Engineers and/or NC Dept. Environmental Quality and other applicable approvals.

_____Show all perennial and intermittent stream buffers and show widths. Add note requiring orange net fencing along all stream buffers.

_____The Developer must obtain the written permission of the adjacent property owner(s) for any off-site grading or construction prior to construction drawing approval.

_____Show the name of the first watercourse into which storm water leaving the site is tributary.

_____Show the location of all temporary and permanent erosion and sedimentation control measures.

APPENDIX-L

Erosion Control Plan Checklist

_____Show construction detail drawings for all temporary and permanent erosion and sedimentation control measures per the Town of Waxhaw Engineering, Standards and Procedures Manual.

_____Show all design calculations for sediment basins and sediment traps per the NCDEQ Design Manual, latest edition. Note: Minimum of 3 coir fiber baffles per the NCDEQ Design Manual.

_____Label basin contours. Tie into existing contours. Show basin dimensions and weir lengths on the plans.

_____Show wetland protection measures (Orange net fence).

_____Show temporary stream crossings (work along streams, lakes, ponds and wetlands) and details of how each will be stabilized.

_____Show maintenance requirements of temporary erosion and sedimentation control measures during construction.

_____Indicate the name and phone number of the person who is responsible for maintenance of temporary measures during construction on the plans.

_____Show maintenance requirements of permanent erosion and sedimentation control measures following construction.

_____Indicate the name and phone number of the person who is responsible for maintenance of permanent measures following construction on the plans.

_____Show all areas and acreage to be vegetatively stabilized.

_____Drainage area maps clearly and legibly depicts on-site and off-site areas (colored coded maps encouraged). All drainage area maps indicate project limits and are at a legible scale.

_____Show planned vegetation with details of plants, seed, mulch, and fertilizer. Include seeding requirement from the Town of Waxhaw Engineering, Standards and Procedures Manual.

_____Show specifications for permanent and temporary vegetation.

_____Indicate the specified method of soil preparation.

_____Attach the Financial Responsibility Form from the Town of Waxhaw Engineering, Standards and Procedures Manual.

APPENDIX-L

Erosion Control Plan Checklist

_____Attach bid specifications regarding erosion and sedimentation control measures.

_____Indicate setback for streams outside the designated floodplains - 5 times width of top of bank or 20 feet on each side, whichever is greater, as measured from the top of bank.

_____100-year flood plain (old and, if needed, new) and base flood elevation._ valves, hydrants, sanitary sewer lines, manholes, gas lines, valves, telephone, cable television, and electric lines and poles.

_____Deviations from the Town of Waxhaw Engineering, Standards and Procedures Manual must be clearly noted on the plan. *(The Developer must request any deviation from the manual in writing along with justification for review and recommendation by Staff prior to plan review).* Modifications to the Town of Waxhaw standard details require that the Town's title block be removed from the detail.

_____The following notes will be included on all plan sets:

1. If disturbing less than 1 acre, add this note: Ground cover on exposed slopes shall be applied within 14 working days following completion of any phase of grading. Permanent ground cover for all disturbed areas shall be applied within 15 working days or 60 calendar days, whichever is sooner. Slopes left exposed will, within 14 calendar days of completion of any phase of grading, be planted or otherwise provided with temporary or permanent ground cover, devices, or structures sufficient to restrain erosion.

2. If disturbing 1 acre or more, add this note: As required by the NPDES General Permit NCG010000, all perimeter dikes, swales, ditches, perimeter slopes and all slopes steeper than 3 horizontal to 1 vertical (3:1) shall be provided temporary or permanent stabilization with ground cover as soon as practicable but in any event within 7 calendar days from the last land disturbing activity. All other disturbed areas shall be provided temporary or permanent stabilization with ground cover as soon as practicable but in any event within 14 calendar days from the last land disturbing activity. Ground stabilization timeframe exemptions can be found in the NPDES General Permit NCG010000 under Section 2.b. Ground Stabilization.

3. No land disturbing activity, except that which is required to install erosion control measures, may commence prior to approval by the Director of Development Services.

4. Additional erosion control measures may be required based upon specific site conditions.

5. Contact the Town of Waxhaw Development Services Department, at 704-843-2195, for a pre- construction meeting prior to any land disturbing activity.

Erosion Control Plan Checklist

6. Remove all temporary erosion control devices and structures only after site is fully stabilized and approval has been obtained from the Town of Waxhaw Development Services Department.

7. All erosion control designs shall be in accordance with the Town of Waxhaw Engineering, Standards and Procedures Manual, and the NCDEQ Erosion and Sedimentation Control Planning and Design Manual, latest edition.

8. For phased erosion control plans, the Contractor shall meet with the Erosion Control Specialist prior to commencing each phase of erosion control measures.

9. Site grading is to be covered under the General Stormwater Permit NCG010000. Any land disturbing activity > 1 acre requires compliance with all conditions of this general permit under the NPDES. Any noncompliance is a violation of the Clean Water Act and may require enforcement by NCDEQ.

10. Contractor is to keep street clear of mud and other debris.

11. The Professional Engineer registered with the State of North Carolina who prepared the Erosion Control Plan is solely responsible for identification and location of all environmental wetlands, perennial and intermittent streams and buffers shown on the plans.

12. The Town of Waxhaw is not responsible for the accuracy and adequacy of the design, dimensions, and elevations, which shall be confirmed and correlated at the job site. The Town of Waxhaw, through the approval of this document, assumes no responsibility for the completeness and/or accuracy of this document.

13. Silt sacks will be placed in basins/inlets along roadways after initial asphalt surface work is completed.

14. The financially responsible party/agent or the landowner/agent of a land disturbing activity > one acre is required to self-inspect the project. A self inspection, as well as documentation of a project after each phase of the project, is required.

_____Include scheduling notes and construction notes as well as all pertinent Erosion Control Details from the Town of Waxhaw Engineering, Standards and Procedures Manual on all plan sheets.

_____Provide construction sequence notes as well as any additional notes necessary to describe the basic sequence of events on the site.

_____Projects disturbing one acre or more in area are automatically covered by the NPDES

APPENDIX-L

Erosion Control Plan Checklist

General Stormwater Permit NG010000 for construction related activities, provided that basin design requirements and ground stabilization requirements from that permit are included on the erosion control plan. To meet this requirement, include the ground stabilization timeframe table from the Town of Waxhaw Engineering, Standards and Procedures Manual and basin design requirements on the erosion control plan and/or detail sheet, if disturbing 1 acre or more.

_____NPDES General Stormwater Permit NG010000 requires plans to identify areas where the 7 and 14 day ground stabilization requirements will apply. Please show areas on erosion control plan by using hatching, labeling, or other similar conventions.

_____Erosion Control Review Fee.

_____Bond Amount in the form of certified check, cash, or irrevocable letter of credit.

_____Grading more than one acre without an approved Erosion Control Plan is a violation of the Town of Waxhaw Erosion and Sedimentation Control Ordinance.

_____Driveway permit for construction entrances in NCDOT right-of-way must be presented at pre-construction meeting.

APPENDIX- M

ENGINEERING CONSTRUCTION DOCUMENT REVIEW CHECKLIST

October 18, 2018

ENGINEERING DIVISION

CONSTRUCTION DOCUMENT REVIEW CHECKLIST

DEVELOPMENT SERVICES DEPARTMENT
1150 N. Broome Street
PO Box 617
Waxhaw, North Carolina 28173
Phone: 704-843-2195

This is a standardized document generated to facilitate consistent plan reviews. Additional requirements may be necessary based on site-specific conditions. ***Applicant should verify all items are provided in plans or calculations submitted to ensure a complete application prior to review.***

A. PROJECT INFORMATION			
Project Name:		**Date Submitted**	
Location:		**Fee Submitted**	$
Design Contact:		**Phone or Email**	
FOR OFFICE USE ONLY			
Assigned Reviewer:		**PRD Number:**	
Application Complete	**(Yes/No)**	**Comments Due:**	

B. REVIEWS TO BE COMPLETED PRIOR TO CONSTRUCTION DOCUMENT REVIEW	YES	N/A
1. CHECK THAT REVIEWS BELOW HAVE BEEN COMPLETED PRIOR TO SUBMITTAL		
Rezoning (if site not properly zoned for proposed use)		
Conditional Rezoning		
Conditional Use Permit		
Subdivision Review (residential, multiple building sites and right-of-way dedication projects)		
Commercial Site Plan Review (non-residential projects)		
Traffic Impact Analysis (provided through Town process)		

Applicant to Complete the checklist below and include with submittal documents to the Town. Information missing from the submittal or not filled out below will be considered an incomplete submittal, and will be rejected by Town staff. Only complete submittals will be reviewed and provided comments. This checklist is a guidance document for the Town development requirements. For additional information regarding local site development reference the Town of Waxhaw Unified Development Ordinance (Town UDO), Town of Waxhaw Engineering Design and Construction Standards Procedures Manual, and Town of Waxhaw Stormwater Design Manual. The columns under the header "Town Staff Review" are to be completed by the Town of Waxhaw Engineering Division Reviewer.

C. TO BE COMPLETED BY APPLICANT	YES	N/A	TOWN STAFF REVIEW	
			SATISFIED	N/A
1. GENERAL REQUIREMENTS				
Cover Sheet with Project Name, Project Information and Designer and Owner Information				
Site Address and Vicinity Map				
Sheet List with Sheet Name and Number				
Original Submittal Date Provided in Title Block				
Show all easements (utility, access, driveway, etc)				
Zoning labeled on plans, Conditional District Notes Included.				
North Arrow, Legible Scale				
Property(s) boundary (bearings and distances) and Deed Information				
U.S. Fish and Wildlife-Endangered Species Letter provided				
Site Physical and Topographic Survey provided. To be signed and sealed by an NC registered surveyor and include: property boundary, existing paved areas, buildings and				

ENGINEERING DIVISION

CONSTRUCTION DOCUMENT REVIEW CHECKLIST

DEVELOPMENT SERVICES DEPARTMENT
1150 N. Broome Street
PO Box 617
Waxhaw, North Carolina 28173
Phone: 704-843-2195

C. TO BE COMPLETED BY APPLICANT	YES	N/A	TOWN STAFF REVIEW	
			SATISFIED	N/A
structures, utility locations, 1-foot contours, trees (12" DBH and larger), gravel areas, easements, and natural water bodies.				
If construction or grading is proposed in a utility easement or NCDOT rights-of way, then provide a letter from the utility owner granting permission, and/or an encroachment agreement from NCDOT.				
If off-site grading is proposed, then provide easement documentation showing this is permissible (temporary or permanent easements)				
FEMA floodplain and floodway boundaries identified with FIRM map and panel number provided				
North Carolina Department of Transportation Driveway Permit provided				
NCDEQ Construction General Stormwater Permit (NCG01/NCG25) obtained for sites over 1.0-acre				
NCDEQ State Post-Construction Stormwater Quality Permit obtained and provided				
Public water and sanitary sewer mains and connections submitted to Union County Public Works for review under separate submittal.				
Jurisdictional waters of the US (wetlands and streams) identified on the plans				
404/401 permit provided if impacting jurisdictional waters of the US.				
2. DEMOLITION PLAN				
Existing Site Conditions shown based on Site Physical and Topographic Survey				
Denote existing structures, utilities, and paved areas to be removed				
3. EROSION CONTROL PLAN *(Reference Town of Waxhaw Erosion Control Ordinance & Standard Detail Section 500)*				
Completed and notarized Financial Responsibility Form (if the financially responsible party is out of State, a North Carolina agent must be assigned)				
Minimum 2 phase erosion control plan unless otherwise approved by the Town Engineer.				
Existing and proposed contours. Shown and labeled in intervals of two (2) feet of less. interval, existing dashed grey & proposed solid black. NAVD 88 datum.				
Erosion control device basin map labeled and shows drainage areas for each phase of construction.				
Site specific construction sequence (Town minimum standard sequence attached in Section D-1)				
Denuded/disturbed acres clearly delineated on the plan (straight line styles only) and acreage clearly labeled.				
Undisturbed buffer areas - dimensions and locations (grading in a buffer requires zoning approval)				
Swales, berms & temporary diversion ditches per Town Standards. Sized for the 10-year, 5-minute design intensity and calculations provided indicating non-erosion flow.				
Erosion control blanket/lining indicated for swales and ditches based on non-erosive flow calculations. Specs provided within plans.				
Location of on-site and/or off-site waste disposal areas; location of borrow sites				
Stabilized gravel construction entrance Town Standards				
Temporary Silt fence and High Hazard Temporary Silt Fence. Used for sheet flow control only per Town Standards. Silt fence stone outlets provided at low points and points of concentrated flow.				
Silt fence placed a minimum 10' clear zone from toe of proposed graded slopes.				
Hardware cloth, Rip Rap dissipator pads w/ washed stone for outlet protection shown at all pipe outlets.				

ENGINEERING DIVISION

CONSTRUCTION DOCUMENT REVIEW CHECKLIST

DEVELOPMENT SERVICES DEPARTMENT
1150 N. Broome Street
PO Box 617
Waxhaw, North Carolina 28173
Phone: 704-843-2195

C. TO BE COMPLETED BY APPLICANT	YES	N/A	TOWN STAFF REVIEW	
			SATISFIED	N/A
Sediment/Skimmer basin control device (or other appropriate device) showing dimensions, proposed contours, contour labels, tie to existing contours, primary outlet, emergency spillway, and baffles.				
Appropriate basin detail provided on the plans indicating storage volume required/provided				
Designed emergency spillways place in cut (dimensioned and calculations provided)				
Erosion control slope matting provided for all slopes steeper than 3:1 during control. Matting spec sheet provided in plans				
Temporary Rock Check Dam (Dimensions- Length, height, class of riprap) Town Standards				
Stabilized Gravel Construction Entrance, Inlet protection, slope drains shown per Town Standards				
Temporary Seeding schedule per Town Standards.				
Stream/creek crossings provided per Town Code				
Jurisdictional streams and wetlands appropriately protected from sedimentation.				
Minimum 10' clear zone from top of stream banks to denuded limit.				
Town Standard Erosion Control Notes provided on plans per Section D-2.				
4. SITE PLAN				
Existing and proposed property lines, easements (public and private), adjacent uses and zoning.				
Existing and proposed driveways with widths shown, opposing driveway locations, sight distance (Town and NCDOT), right-of-way width and required future widths, street pavement width and material, street lane striping shown, curb, gutter and sidewalk.				
Existing and proposed building footprints, uses, square footages, and building distances from property line.				
Off-street parking layout and code required calculations. Location of any proposed on-street parking.				
Typical parking stalls dimensioned, parking aisles width dimensioned				
Radii of driveway and internal drive curb curvatures labeled.				
Site circulation, striping, and signage denoted				
Travel path of delivery trucks and fire trucks shown with heavy duty pavement indicated along the proposed route. Provide truck routes on separate plan sheet.				
Location and size of external utility meters, HVAC systems, dumpster enclosures, transformers with detail of screening to be used.				
Light pole locations. Provide a Lighting Plan in compliance with Section 12.12 of the Town UDO.				
Retaining walls indicated with necessary safety features in place. Provide retaining wall plans as outlined in Section C-5				
Accessible parking spaces with signs and painted symbols. Show dimensions				
Accessible pathway from building entrance to public right-of-way (2% cross-slope, 5% longitudinal)				
Sidewalk shown with ramps and curb ramps meeting accessibility requirements				
Pylon and monument sign locations indicated on the plan.				
5. GRADING AND DRAINAGE PLAN *(Reference Town of Waxhaw Erosion Control Ordinance & Standard Detail Section 300)*				
All design in accordance with the Town of Waxhaw - Provide details of all drainage structures of reference detail by number.				

ENGINEERING DIVISION

CONSTRUCTION DOCUMENT REVIEW CHECKLIST

DEVELOPMENT SERVICES DEPARTMENT
1150 N. Broome Street
PO Box 617
Waxhaw, North Carolina 28173
Phone: 704-843-2195

C. TO BE COMPLETED BY APPLICANT	YES	N/A	TOWN STAFF REVIEW	
			SATISFIED	N/A
Existing and proposed contours. Shown and labeled in intervals of two (2) feet of less. interval, existing dashed grey & proposed solid black. NAVD 88 datum.				
Critical spot elevations at all sidewalks & curb around building, accessible routes and parking, and concrete pads for dumpsters/trash compactors, door stoops, transformers, generator, etc.				
Drainage features shown including ditches, swales, channels, and watercourses; plans should include flow direction arrows and spot elevations. Refer to **Section D-3** for additional channel design requirement.				
Building finished floor elevations indicated on all onsite structures existing and proposed.				
Accessible Routes shown with sidewalk grades have a 5% maximum longitudinal slope and 2% cross slope.				
Accessible parking, ramps and landing areas shown with spot elevations showing grades are 2% or less.				
Label all slopes 3:1 and steeper. Slopes steeper than 3:1 are supported by findings of a geotechnical report, and appropriately stabilized until vegetation is established.				
Specify slope matting and include specs for all permanent slopes				
All grading is shown within the property limits and/or public right-of-way. Indicate locations of grading easements offsite and provide documentation for approved easement.				
Sidewalk and cross-walk cross-slope at maximum 2%				
Guard rail placed near drive or parking stall parallel to and within 20' of slope steep than 3:1 or elevation change greater than 8'				
Earthwork requirements for compaction, foundation preparation, topsoil requirements, etc. noted in the plans.				
Location, size, invert and rim or grate elevations, and material for all existing and proposed storm sewer pipe, structures, and culverts on and immediately adjacent to the site.				
Storm sewer system designed to convey the 10-year design storm intensity within the pipe.				
Where roadway overtopping is anticipated, drainage that is picked up in a culvert (or other drainage structure) prior to crossing a road or driveway must be conveyed in a system designed for the 25-year storm (50 year for thoroughfares). Flow calculations must be based on the appropriate design storm to the end of the system or to a relief point lower than the street elevation.				
Provide scaled profiles for all storm sewer systems and culverts showing and labeling the appropriate design hydraulic grade line (HGL). Indicate utility crossings and clearances.				
Discharge leaves site in same direction and relative location as pre-developed condition. Identify offsite receiving conditions.				
Structures or flared end sections at all inlets and outlets of all pipe systems (no CMP or HDPE FES allowed)				
Non-standard drainage structures (CBs, HWs, FESs, bottomless culverts) will require sealed construction drawings.				
All building roof drain and scupper locations indicated on the plan.				
Minimum storm sewer pipe cover of two (2) feet.				
The minimum allowable slope is 0.5 percent, or the slope, which will produce a velocity of 2.5 fps when the storm water in system is flowing full, whichever is greater.				
Maximum velocity in pipes 20 fps (10 fps for CMP)				
Maximum discharge velocity at pipe outlets is 10 fps except for pipes > 48" in diameter.				
Defined/stabilized pipe, flume and channel outlet locations. At a minimum, rip rap dissipator pads are provided at all outfall pipes.				

ENGINEERING DIVISION

CONSTRUCTION DOCUMENT REVIEW CHECKLIST

DEVELOPMENT SERVICES DEPARTMENT
1150 N. Broome Street
PO Box 617
Waxhaw, North Carolina 28173
Phone: 704-843-2195

C. TO BE COMPLETED BY APPLICANT	YES	N/A	TOWN STAFF REVIEW	
			SATISFIED	N/A
Riprap dissipators when provided at pipe outfalls at 0% slope, Min. L=10', Min. Depth=10".				
Properly sized and labeled Storm Drainage Easements (SDE) see widths below from: Pipe Diameter (inches) — Pipe Easement Width (feet) 15-24 — 15 30-36 — 20 42-48 — 25 54+ — 30' min. (Varies)				
Corrugated metal pipes must be aluminum or aluminized steel.				
Provide details of curb cuts and flumes				
Storm BMPs clearly labeled with Type, BMP number, surface elevations, minimum area and volumes, and reference applicable details. Designed to meet Town standards and calculations and drainage maps provided in Stormwater Calculation Report per **Section C-6.**				
BMP Primary Outlet Control Structure and Emergency Spillway clearly labeled. Emergency spillways placed in cut, if possible.				
Review potential impacts of storm outlet discharges downstream (i.e. property damage, erosion impacts, loss of life). Revise discharge location as needed.				
Emergency spillway is design to be non-erosive discharge for designed flow. Lining clearly labeled, as needed.				
Maintenance access provided to detention pond with gate, mountable curb, and gravel drive. Minimum top width of 10' for all BMP permanent earthen berms. 12' to 15' preferred for vehicular access. Minimum of 1' drop for cross-slope on berm.				
Stormwater maintenance and access easement provided from the public right-of-way to the BMP location and encompassing the BMP. Minimum 20' width.				
Retaining walls labeled with top of wall (TW) and bottom of wall (BW) spot elevations. Retaining walls over five (5) feet in height require details to be submitted per **Section C-7**				
Drainage at top and base of retaining walls considered. Ditches provided where necessary.				
For pipe systems not designed for Q100-YR that receives >50 cfs in Q100-YR, flood protection analysis is required. Refer to **Section D-4** for additional requirements.				
100-year floodplain and floodway boundaries, flood hazard soil boundaries, flood storage area easements, and regulatory flood protection elevations should be shown on plans. Indicate FEMA map and/or flood study numbers. If filling in floodplain, identify limits of filled area. Refer to **Section D-5** for additional floodplain development requirements.				
Proposed Right-of-Way or Roadway improvements must be shown on the plans. Plan and profile to be provided for Town maintained roadway construction meeting the requirements of the Town of Waxhaw Engineering Design and Construction Standards and Procedures Manual and indicating the proposed design speed.				
Maximum of one (1) acre runoff draining into the street at one point.				
No concentrated runoff flowing over Town sidewalks except at driveway entrances				
Curb and gutter slopes not less than 0.5 percent. Maximum spread of 6 feet on public streets based on rainfall intensity of 4 in/hr				
Roadside ditches sized to convey the 10-year design storm intensity (minimum 18-inches deep), and 25-year design storm intensity checked to prevent inundation of the pavement. Longitudinal slope minimum 1.0%, roadside side slope 3:1 minimum, and right-of-way side slope 2:1 minimum.				
Intersections: Slope less than 2% across intersections may need additional CBs and spot elevations. Catch basin placement at intersections per Town Standard.				

DEVELOPMENT SERVICES DEPARTMENT
1150 N. Broome Street
PO Box 617
Waxhaw, North Carolina 28173
Phone: 704-843-2195

C. TO BE COMPLETED BY APPLICANT	YES	N/A	TOWN STAFF REVIEW	
			SATISFIED	N/A
Pipes in R/W 48" or less in diameter may be HDPE or RCP, >48" may be RCP, >60" may be aluminized steel; minimum 15"				
5. STORM BMP DETAILS				
Plan View of BMP provided with detailed labels and grading shown.				
Scaled profile of BMP provided detailing locations and elevations of the primary and emergency spillways, permanent pool, treatment medias, underdrains, permanent and temporary pool, orifice control outlets, and designed water surface elevations.				
Custom details provided for primary spillway with sized and inverts of all orifices, spillways, grates, rims, pipes, emergency drains/valves, trash racks, anti-flotation device, and turn down devices.				
Emergency spillway detail provided indicating the design invert, width, length, and lining. Emergency spillways for ponds shall be designed to pass 50-year storm discharge. Place in cut, if possible, lining required in fill areas.				
BMP notes and specifications provided.				
Anti-seep method and locations indicated in plan and profile.				
Freeboard labeled. Minimum 6" freeboard above 50-year elevation on earthen basins (on basins less than 15' deep)				
Town standard detail provided on sheet.				
Summary table provided outlining the required and provided design volumes and permanent pool areas.				
Separate Plan View or plan sheet indicating proposed plantings and locations. If grass, then permanent seeding and stabilization methods specified.				
Liners noted and specified as needed.				
6. STORMWATER CALCULATION REPORT *(Reference Town of Waxhaw Stormwater Design Manual)*				
All development submittals requiring calculations shall include a bound report sealed by an NC licensed engineer				
Table of content provided				
Narrative which gives background on the existing/proposed site, means by which hydraulics / hydrology were performed, and any other pertinent information needed to give a better understanding of methodology; including assumptions for design. Indicate how Town requirements were met and provide summary table of peak discharges from the site.				
USGS map, NRCS County Soils Map, FEMA FIRM provided with the site area indicated.				
Soils Hydraulic Soils Group (HSG) information provided for each soil type onsite.				
Pre-development and Post-development drainage area maps provided showing each point of analysis (POA) where discharge is leaving the site property boundary, all detained and undetained drainage, land coverage and associated CN values, soil types, time of concentration paths (label areas of sheet flow, shallow flow, and concentrated flow), impervious surfaces, and acreages.				
BMP drainage area map				
BMP sizing calculations showing NCDEQ methods and BMP volume calculations based on stage area.				
Anti-flotation calculations for primary risers				
Emergency spillway weir flow calculations and stabilization calculations.				
Pre- and post-construction peak discharge calculations for each outlet from the site (POA). Be sure to provide all supporting calculation routing data for the computation methods				

DEVELOPMENT SERVICES DEPARTMENT
1150 N. Broome Street
PO Box 617
Waxhaw, North Carolina 28173
Phone: 704-843-2195

C. TO BE COMPLETED BY APPLICANT	YES	N/A	TOWN STAFF REVIEW	
			SATISFIED	N/A
used (rainfall data for 2-, 10-, and 50-year storm events, time of concentration/storm duration, and runoff coefficients, detention volumes).				
Plan view of modeling schematic provided to supplement peak discharge calculations.				
Catchment Map for all storm sewer structures and culverts onsite indicating area in acreage, time of concentration and runoff coefficients for each structure.				
Storm sewer calculations table per Town requirements. For each pipe segment, the calculations should indicate at a minimum the catchment area, rainfall intensity, time of concentration, design discharge, design capacity/capacity full, rim elevation, pipe size, velocity, material, pipe invert upstream and downstream, and HGL upstream and downstream.				
Gutter flow and spread calculations				
Discharge and velocity calculations for temporary and permanent open channel and ditch flows.				
Design calculations for cross sections and method of stabilization for existing and planned channels (include temporary linings). Include appropriate permissible velocity and/or shear stress data				
Design calculations and construction details for energy dissipaters below culvert and storm sewer outlets (include stone/material specs & apron dimensions).				
Design calculations and dimension of sediment basins and skimmers. A Rational C value of 0.6 and a Tc of 5 minutes should be used for cleared land.				
7. RETAINING WALL DETAILS				
Retaining walls less than five feet tall are not required to have plan approval. However, retaining wall systems less than five feet in cumulative vertical relief and adjacent to a structure located closer than the vertical relief shall be designed under the responsible charge of a registered design professional and shall require a permit and inspection.				
Retaining walls designed in accordance with the North Carolina Building Code (NCBC). Provide note on plans.				
Retaining walls over five (5) feet in cumulative vertical relief shall be detailed in scaled cross-section and profile and signed and sealed by a NC licensed engineer. All notes and calculations shall be provided on the plans sheets.				
Wall shall be detailed showing product/wall type, material facing, structural supports, wall footings, wall tie-backs, geofabric and stone lifts, and wall drainage/weep holes.				
If tree plantings, site lighting, guard rail, and/or safety rail are proposed within the structural footprint of the retaining wall, then provide details for proper installation.				
Detail all storm pipes planned to pass through or directly under the wall section.				
A geotechnical report shall be provided accompanying all retaining wall plans and evaluating these design requirements.				
Add this note to the plan: "As-built details and Engineering letter certifying the retaining wall is built in accordance with NCBC and the approved plans will be required to be submitted to the Town prior to the final inspection approval and the issuance of the Certificate of Compliance."				
If the retaining wall is located adjacent to a walking or driving surface, safety guards and rails shall be installed in accordance with the provisions of 2012 NCBC Section 1013.				
NCBC Section 1807.2.1 require that retaining walls shall be designed to ensure stability against overturning, sliding, excessive foundation pressure and water uplift. Where a keyway is extended below the wall base with the intent to engage passive pressure and enhance sliding stability, lateral soil pressures on both sides of the keyway shall be considered in the analysis.				
NCBC Section 1807.2.3 Safety Factor. Retaining walls shall be designed to resist the lateral action of soil to produce sliding and overturning with a minimum safety factor of 1.5 in				

DEVELOPMENT SERVICES DEPARTMENT
1150 N. Broome Street
PO Box 617
Waxhaw, North Carolina 28173
Phone: 704-843-2195

C. TO BE COMPLETED BY APPLICANT	YES	N/A	TOWN STAFF REVIEW	
			SATISFIED	N/A
each case. The load combination of Section 1605 shall not apply to this requirement. Instead, design shall be based on 0.7 times nominal earthquake loads, 1.0 times other nominal loads, and investigation with one or more of the variable loads set to zero. The safety factor against lateral sliding shall be taken as the available soil resistance at the base of the retaining wall foundation divided by the net lateral force applied to the retaining wall. Exception: Where earthquake loads are included, the minimum safety factor for retaining wall sliding and overturning shall be 1.1.				

Section D, below, is a supplement to the checklist above and provided as standard guidance to be included in the plans as applicable. The applicant shall be responsible for reviewing the Town of Waxhaw code of ordinance and providing additional information as necessary.

D. EROSION CONTROL STANDARDS

1. MINIMUM CONSTRUCTION SEQUENCE

The Construction Sequence must be project specific and include the following (additional items shall be added depending on site conditions):

1. Obtain Grading/Erosion Control plan approval from the Town of Waxhaw Engineering Department.
2. Set up a on-site pre-construction conference with Erosion Control Inspector of the Town Engineering Department to discuss erosion control measures. Failure to schedule such conference 48 hours prior to any land disturbing activity is a violation of Chapter 17 of the Town Code and is subject to fine.
3. Install silt fence, inlet protection, sediment traps, diversion ditches, tree protection, and other measures as shown on plans, clearing only as necessary to install these devices.
4. Call for on-site inspection by Inspector. When approved, Inspector issues the Grading Permit and clearing and grubbing may begin.
5. The contractor shall diligently and continuously maintain all erosion control devices and structures.
6. For phased erosion control plans, contractor shall meet with Erosion Control Inspector prior to commencing with each phase of erosion control measures.
7. Stabilize site as areas are brought to finished grade.
8. Coordinate with Erosion Control Inspector prior to removal of erosion control measure.
9. All erosion control measures shall be constructed in accordance with the N. C. Erosion and Sediment Control Planning and Design Manual, U. S. Dept. of Agriculture, Town of Waxhaw Erosion Control Ordinance.

2. EROSION CONTROL NOTES

All "Std." numbers refer to the Town of Waxhaw Engineering Design & Construction Standards Procedures Manual.

1. On-site burial pits require an on-site demolition landfill permit from the Zoning Administrator.
2. Any grading beyond the denuded limits shown on the plan is a violation of the Town's Erosion control Ordinance and is subject to a fine.
3. Grading more than one acre without an approved Erosion Control Plan is a violation of the Town's Erosion Control Ordinance and is subject to a fine.
4. All perimeter dikes, swales, ditches, perimeter slopes and all slopes steeper than 3 horizontal to 1 vertical (3:1) shall be provided temporary or permanent stabilization with ground cover as soon as practicable but in any event within 7 calendar days from the last land-disturbing activity.
5. All other disturbed areas shall be provided temporary or permanent stabilization with ground cover as soon as practicable but in any event within 14 calendar days from the last land-disturbing activity.
6. Additional measures to control erosion and sediment may be required by a representative of the Town of Waxhaw Engineering Division.
7. Slopes shall be graded no steeper than 2:1. Fill slopes greater than 10'high require adequate terracing.
8. A grading plan must be submitted for any lot grading exceeding one acre that was not previously approved.
9. Driveway permit for construction entrances in NCDOT right of way must be presented at pre-construction meeting.

DEVELOPMENT SERVICES DEPARTMENT
1150 N. Broome Street
PO Box 617
Waxhaw, North Carolina 28173
Phone: 704-843-2195

D. EROSION CONTROL STANDARDS

3. CHANNEL DESIGN
(Reference Stormwater Ordinance Chapter 4)

1. Channel cross-sections and calculations provided in plans or Storm Calculation Report.
2. Maximum 2:1 side slopes.
3. Sized to convey 10-year design storm intensity
4. Minimum 6" freeboard
5. The final design of artificial open channels should be consistent with the velocity and shear strength limitations for the selected lining.
6. Liner specifications and design information from manufacturer.
7. Transition to channel sections with a minimum of 5:1 taper?
8. Channels with bottom widths > 10' must have a minimum bottom cross slope of 12:1.
9. Properly sized and labeled storm drainage easement (SDE) see widths below

Area in Acreage	Channel Easement Width (feet)
1-45	20
45-120	30
120-500	40
500+	Per Town Engineer

10. Driveway pipes sized for Q10, check for roadway overtopping as required.
11. In case of 100+1 Overland Relief Channel.
12. Cross-sections at back of curb (beginning of channel), front of building pad(s), and back of building pad(s). Typical detail may be used beyond building pad(s).
13. 1' minimum freeboard at building pad(s).

4. 100+1 FLOOD ANALYSIS [Q_{100}>50 CFS]
(Reference Stormwater Ordinance Chapter 4.3)

1. Overland Relief Point identified on plans.
2. Flood study calculations shall be sealed by PE.
3. Calculations for flow and time of concentration (Tc).
4. Runoff coefficients shall be based on assumption of full development of parcels per current zoning.
5. Include digital copy of channel analysis input file in submittal (e-mail or CD acceptable).
6. Proposed Stormwater Protection Elevations (SWPE) shall be labeled on site and grading plan for each lot (the SWPE should be based on Overland Relief Channel if applicable).
7. Show and label location of 100+1 Stormwater Elevation Line (SWEL) on site and grading plan.
8. Minimum 1,200 sf of buildable area per lot.
9. Show or describe on plan the location and elevation (ref. vertical datum, i.e. NAVD 88) of permanent benchmark used in channel survey. All topographic information shown on grading plan shall also be referenced to this benchmark.
10. Existing channel cross-section geometry used in analysis shall be based on a "Class A" field survey and shall be sealed by RLS.
    a. When fill is proposed within the 100+1 Stormwater Elevation Line, plotted channel cross-sections shall be included in the subdivision plan set and shall show both existing and proposed cross-section geometry. Sheets to be signed by RLS for existing and PE for proposed conditions.
    b. When no grading is proposed within the 100+1 Stormwater Elevation Line, it is not necessary to include plotted cross-sections in the subdivision plan set. A note shall be added to the grading plan specifying that there shall be no grading within the limits of the 100+1 Stormwater Elevation Line.
    c. Cross sections taken perpendicular to the stream centerline, maximum 100' stations.
    d. Plot cross-sections showing the 100+1 elevation on site and grading plan.
    e. Cross-sections based on topographic map are subject to approval of the Town Engineer.
11. In case of a bridge or culvert:

DEVELOPMENT SERVICES DEPARTMENT
1150 N. Broome Street
PO Box 617
Waxhaw, North Carolina 28173
Phone: 704-843-2195

D. EROSION CONTROL STANDARDS

a. Cross-sections should be prepared at 25 feet from inlet and 5 to 20 feet from outlet.
b. Road profile at culvert crossing to an elevation 2 feet above the low point of road.
c. A physical description of the culvert (type, shape, invert, etc.).
d. Upstream and downstream top of footer elevations for natural bottom culverts.
e. Stormwater Protection Elevations for lots upstream of street crossings shall be based on the higher of the elevation determined by analysis or the low point of the road plus 1 foot.

5. FLOODWAY [Drainage Area > 640 Acres]

(Reference Section 6.5 of the UDO Flood Damage Prevention Ordinance)

1. Creek name (label centerline).
2. Label the following lines clearly on grading and site plan:
   a. FEMA 1% Annual Chance Floodway Boundary Line.
   b. FEMA 1% Annual Chance Floodplain Boundary Line (often called “Flood Fringe”).
3. Floodway Cross-sections (Label, Stream Station, Location, Future Conditions Flood Elevation)
4. Regulatory Flood Protection Elevation (RFPE): Base Flood Elevation(BFE) + 2’ Freeboard for Residential Construction/ Base Flood Elevation(BFE) + 1’ Freeboard for Commercial Construction)
5. Contact Matt Hubert at (704) 843-2195 concerning Floodplain Development Permit (any property crossed by a FEMA Floodline is subject to this permit. (Approval required prior to commencement of all construction activities.)

STANDARD DRAWINGS

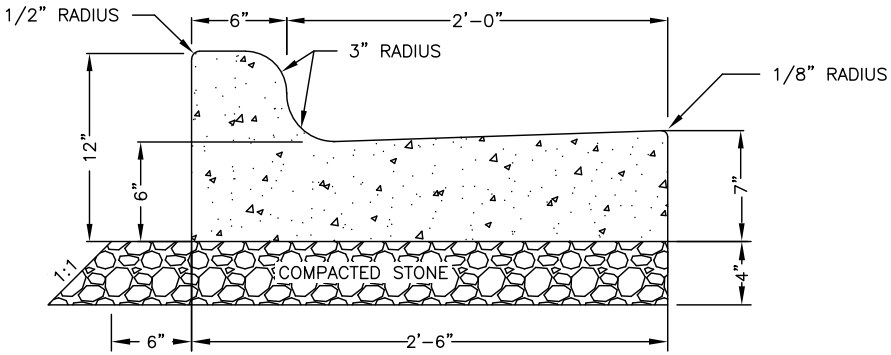

STANDARD 2'-6" CURB AND GUTTER

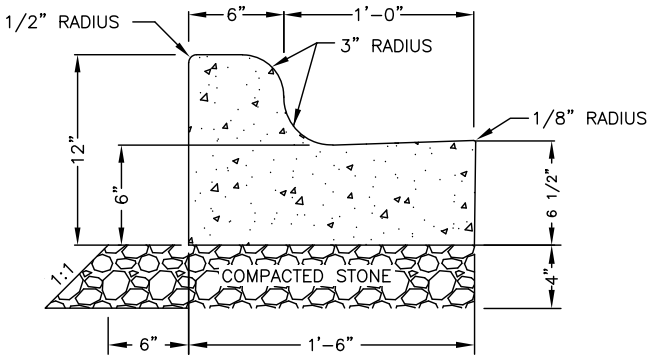

1'-6" STANDARD CURB AND GUTTER

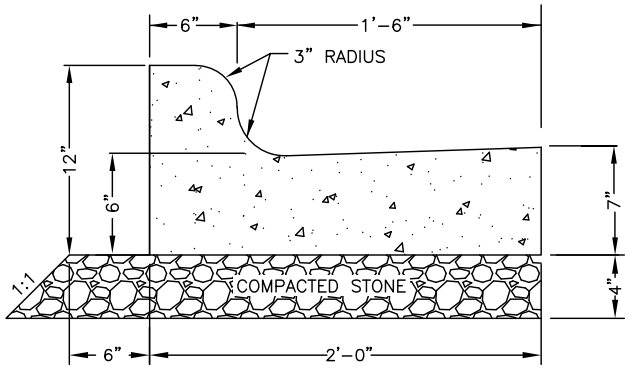

2'-0" STANDARD CURB & GUTTER

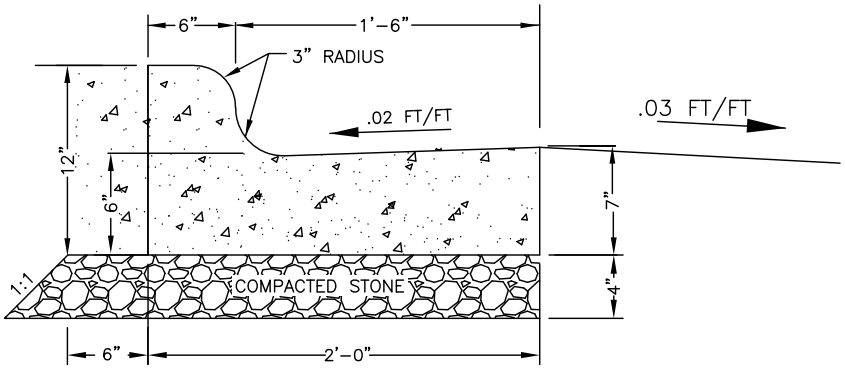

SLOPE FOR VARIABLE
SUPERELEVATION RATES

NOT TO SCALE

	TOWN OF WAXHAW LAND DEVELOPMENT STANDARDS	STANDARD CURB AND GUTTER	STD. NO. 100.1 / REV.

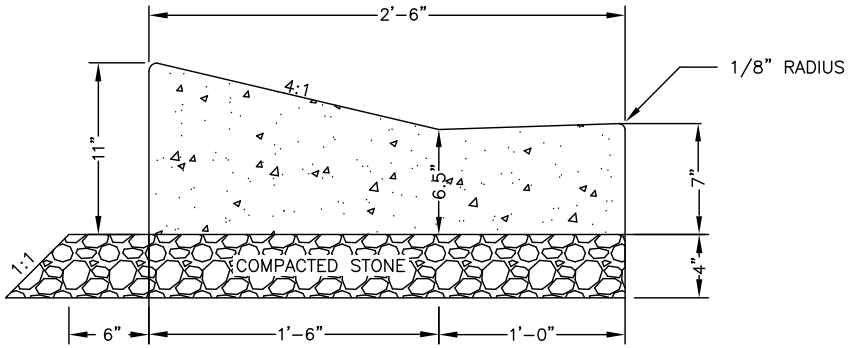

2'-6" VALLEY GUTTER

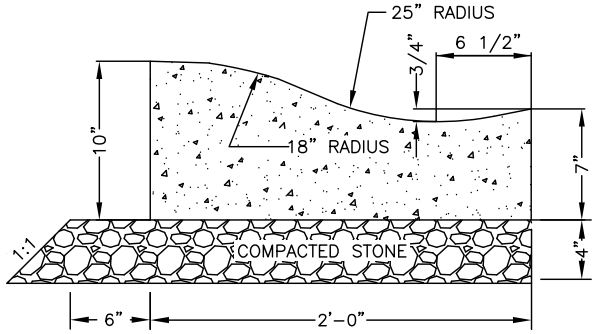

2'-0" ROLL GUTTER

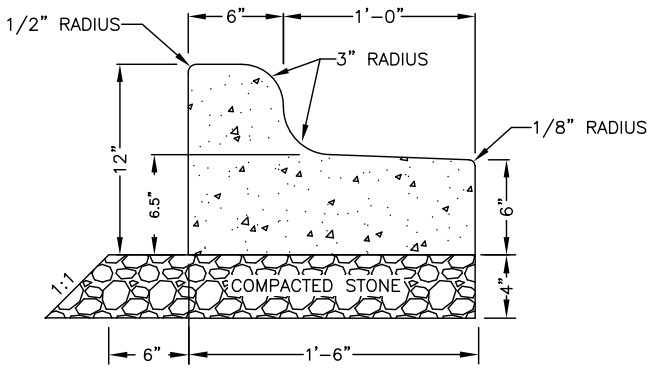

1'-6" MEDIAN CURB AND GUTTER

TO BE USED IN MEDIANS WHEN LANES ARE SLOPED FROM ISLAND OR AS SPECIFIED BY THE DEVELOPMENT SERVICES DEPARTMENT.

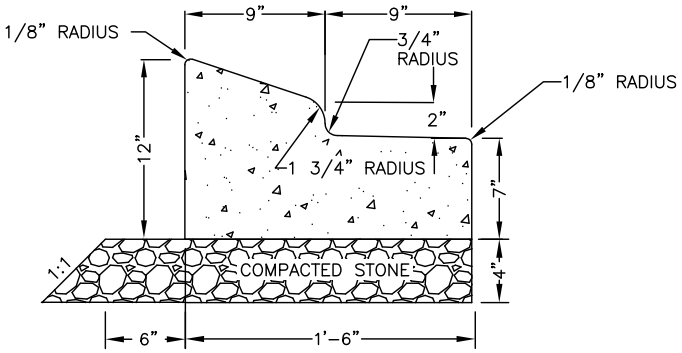

1'-6" MOUNTABLE CURB AND GUTTER

TO BE USED IN MEDIANS ONLY: WHEN SPECIFIED BY THE DEVELOPMENT SERVICES DEPARTMENT.

NOT TO SCALE

TOWN OF WAXHAW LAND DEVELOPMENT STANDARDS	CURB AND GUTTER	STD. NO.	REV.
		101.1	8/19

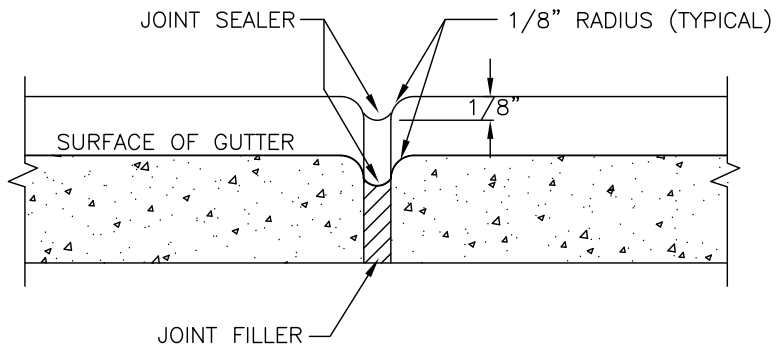

TRANSVERSE EXPANSION JOINT

NOTES:

1. CONTRACTION JOINTS SHALL BE SPACED AT 10-FOOT INTERVALS. FOR VALLEY GUTTER, A 15-FOOT SPACING MAY BE USED WHEN A MACHINE IS USED. JOINT SPACING MAY BE ALTERED BY THE TOWN ENGINEER TO PREVENT UNCONTROLLED CRACKING.
2. CONTRACTION JOINTS MAY BE INSTALLED BY THE USE OF TEMPLATES OR FORMED BY OTHER APPROVED METHODS. WHERE SUCH JOINTS ARE NOT FORMED BY TEMPLATES, A MINIMUM DEPTH OF 1 1/2" SHALL BE OBTAINED.
3. ALL EXPANSION JOINTS SHALL BE SPACED AT 90-FOOT INTERVALS, AND ADJACENT TO ALL RIGID OBJECTS. JOINTS SHALL MATCH LOCATIONS WITH JOINTS IN ABUTTING SIDEWALK.
4. CONCRETE COMPRESSIVE STRENGTH SHALL BE 3600 P.S.I. IN 28 DAYS WITH A 4-INCH SLUMP.
5. CURB SHALL BE DEPRESSED AT INTERSECTIONS TO PROVIDE FOR FUTURE ACCESSIBLE RAMPS.
6. TOP 6" OF SUBGRADE BENEATH THE CURB AND GUTTER SHALL BE COMPACTED TO 100% STANDARD PROCTOR DENSITY.
7. SEE ALSO 106.1

NOT TO SCALE

TOWN OF WAXHAW LAND DEVELOPMENT STANDARDS	TRANSVERSE EXPANSION JOINT	STD. NO.	REV.
		102.1	8/19

NOTES:

1. CONTRACTION JOINTS SHALL BE SPACED AT 10-FOOT INTERVALS. JOINT SPACING MAY BE ALTERED BY THE ENGINEER TO PREVENT UNCONTROLLED CRACKING.
2. CONTRACTION JOINTS MAY BE INSTALLED BY THE USE OF TEMPLATES OR FORMED BY OTHER APPROVED METHODS. WHERE SUCH JOINTS ARE NOT FORMED BY TEMPLATES, A MINIMUM DEPTH OF 1 1/2" SHALL BE OBTAINED.
3. ALL EXPANSION JOINTS SHALL BE SPACED AT 90-FOOT INTERVALS, AND ADJACENT TO ALL RIGID OBJECTS. JOINTS SHALL MATCH LOCATIONS WITH JOINTS IN ABUTTING SIDEWALK.
4. CONCRETE COMPRESSIVE STRENGTH SHALL BE 3600 P.S.I. IN 28 DAYS, WITH 4-INCH MAXIMUM SLUMP.
5. CURB SHALL BE DEPRESSED AT INTERSECTIONS TO PROVIDE FOR FUTURE ACCESSIBLE RAMPS.
6. TOP 6" OF SUBGRADE BENEATH THE CURB SHALL BE COMPACTED TO 100% STANDARD PROCTOR DENSITY.
7. DETAIL MAY BE USED FOR PRIVATE DRIVES, PARKING LOTS, AND INTERIOR CIRCULATION DRIVE.

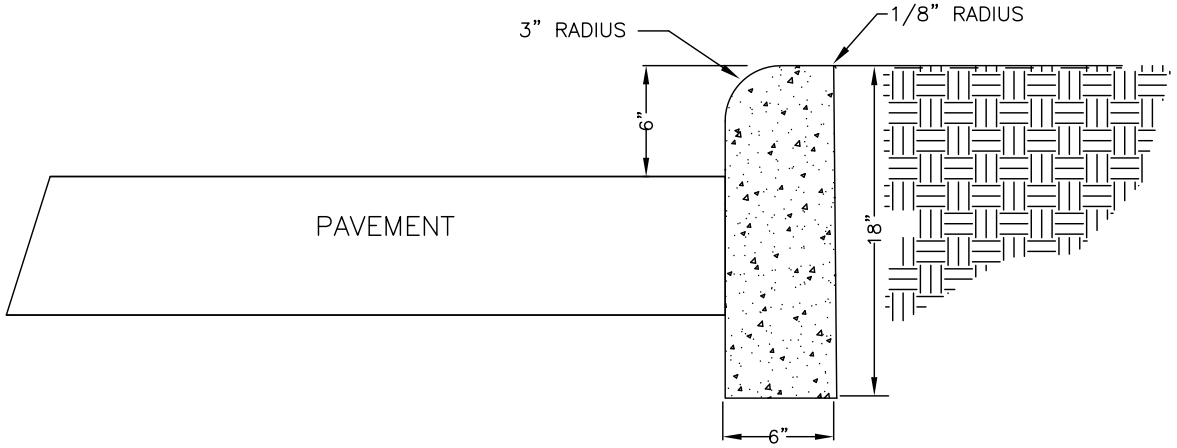

NOT TO SCALE

TOWN OF WAXHAW LAND DEVELOPMENT STANDARDS	18" VERTICAL CURB	STD. NO.	REV.
		103.1	8/19

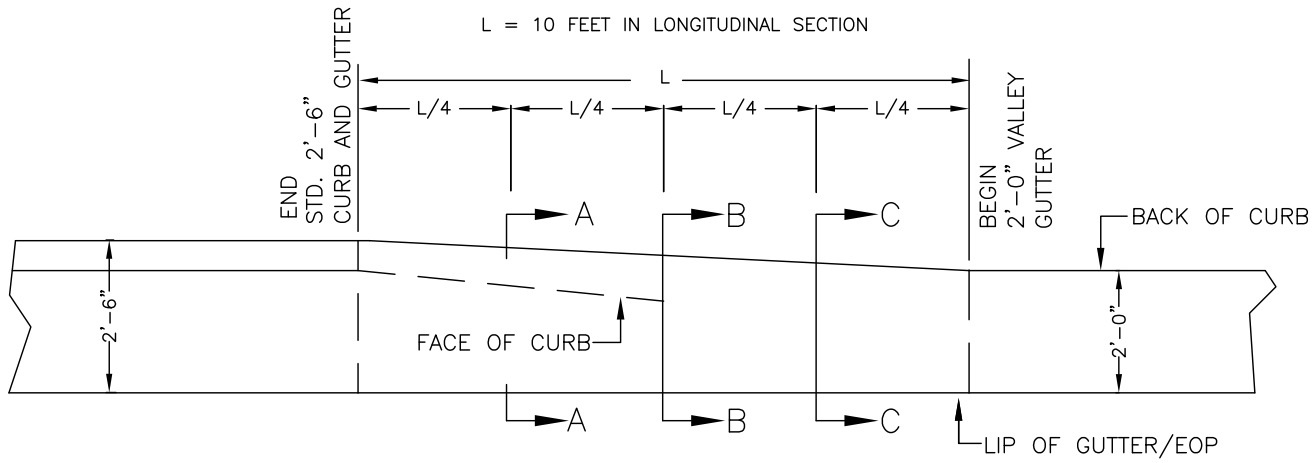

PLAN VIEW

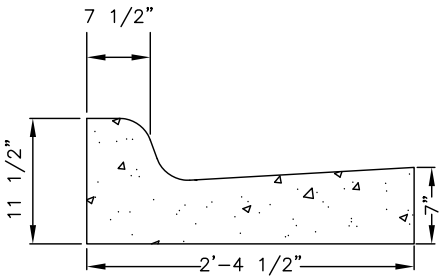

SECTION A–A

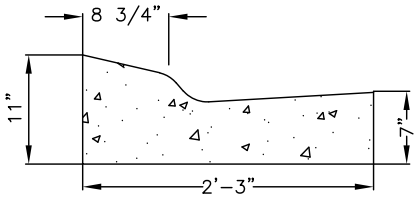

SECTION B–B

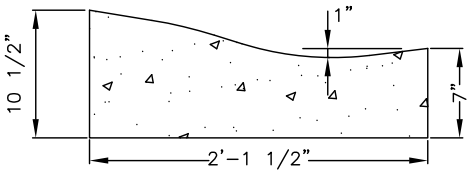

SECTION C–C

NOTES:

1. TRANSITION IS NOT TO BE LOCATED WITHIN THE CURB RADIUS.

NOT TO SCALE

TOWN OF WAXHAW LAND DEVELOPMENT STANDARDS	CURB TRANSITION 2'6" CURB AND GUTTER TO 2'-0" ROLL GUTTER	STD. NO.	REV.
		104.1	

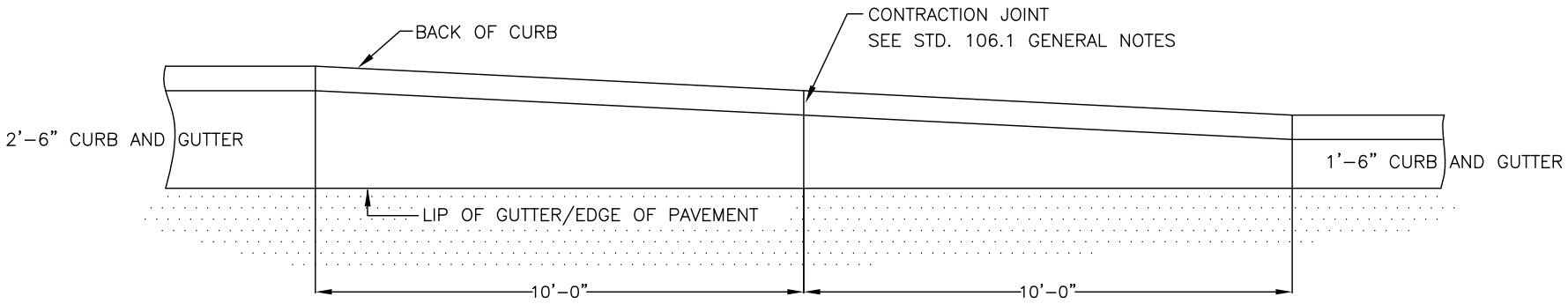

PLAN VIEW

NOTES:

1. TRANSITION TO BE ALONG BACK OF CURB.

NOT TO SCALE

	TOWN OF WAXHAW LAND DEVELOPMENT STANDARDS	CURB TRANSITION 2'-6" CURB AND GUTTER TO 1'-6" CURB AND GUTTER	STD. NO. 105.1 REV.

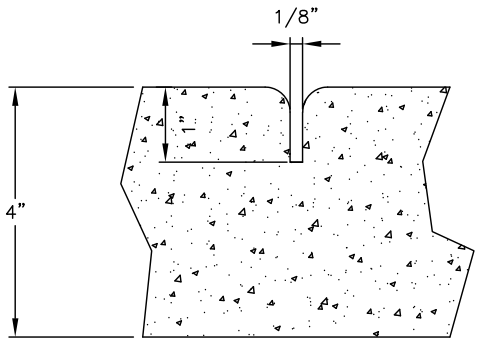

GROOVE JOINT IN SIDEWALK

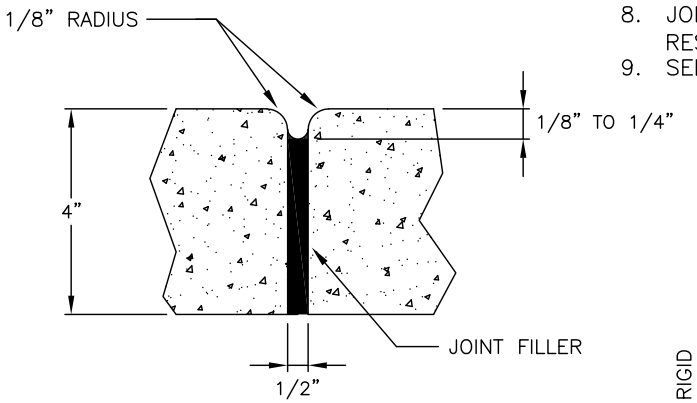

TRANSVERSE EXPANSION JOINT IN SIDEWALK

GENERAL NOTES:

1. A GROOVE JOINT 1" DEEP WITH 1/8" RADII SHALL BE REQUIRED IN THE CONCRETE SIDEWALK AT 5' INTERVALS. ONE 1/2" EXPANSION JOINT WILL BE REQUIRED AT 45' INTERVALS NOT TO EXCEED 50' AND MATCHING EXPANSION/CONSTRUCTION JOINT IN ADJACENT CURB. A SEALED 1/2" EXPANSION JOINT WILL BE REQUIRED WHERE THE SIDEWALK JOINS ANY RIGID STRUCTURE.
2. SIDEWALK AT DRIVEWAY ENTRANCES TO BE 6" THICK.
3. WIDTH OF SIDEWALK ON THOROUGHFARE STREETS SHALL BE A MINIMUM OF 6'. WIDTH OF SIDEWALKS IN THE CERTAIN DISTRICTS WILL BE DETERMINED BY THE DEVELOPMENT SERVICES.
4. WIDTH OF SIDEWALKS ON NON-THOROUGHFARE STREETS SHALL BE BASED ON TYPICAL STREET SECTION, A MINIMUM OF 5'. SIDEWALK TO BE POURED TO END OF RADIUS AT INTERSECTING STREETS.
5. CONCRETE COMPRESSIVE STRENGTH SHALL BE 3600 PSI. IN 28 DAYS.
6. ZONING CONDITIONS MAY REQUIRE ADDITIONAL WIDTH SIDEWALKS WHICH SHALL SUPERSEDE THESE STANDARD DIMENSIONS SHOWN.
7. LIDS FOR JUNCTION BOXES AND UTILITY VAULTS SHALL BE NON-SKID AS SPECIFIED BY ENGINEER.
8. JOINT MATERIALS SHALL LIMIT SHRINK/SWELL SO POST CONSTRUCTION INSTALLATION RESULTS IN A MAXIMUM OF 1/4" FROM FLUSH.
9. SEE ALSO 102.1

EXAMPLE SIDEWALK CONSTRUCTION DIMENSIONS:

WIDTH	RISE	CROSS-SLOPE
4'	3/4"	1.56%
5'	1"	1.67%
6'	1-1/8"	1.56%
8'	1-1/2"	1.56%

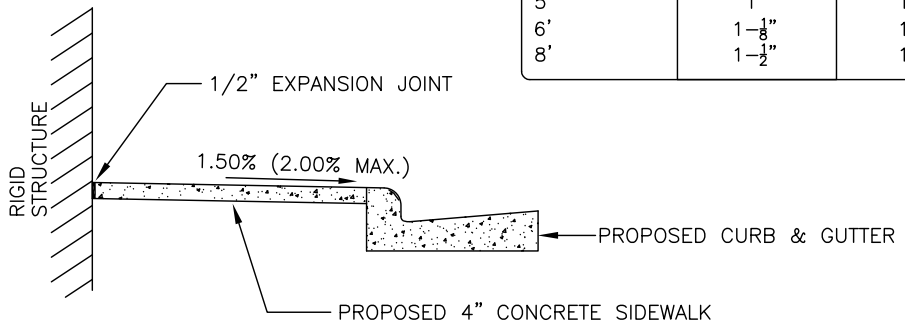

DETAILS SHOWING EXPANSION JOINTS IN CONCRETE SIDEWALK

NOT TO SCALE

TOWN OF WAXHAW
LAND DEVELOPMENT STANDARDS

CONCRETE SIDEWALKS

STD. NO.	REV.
106.1	8/19

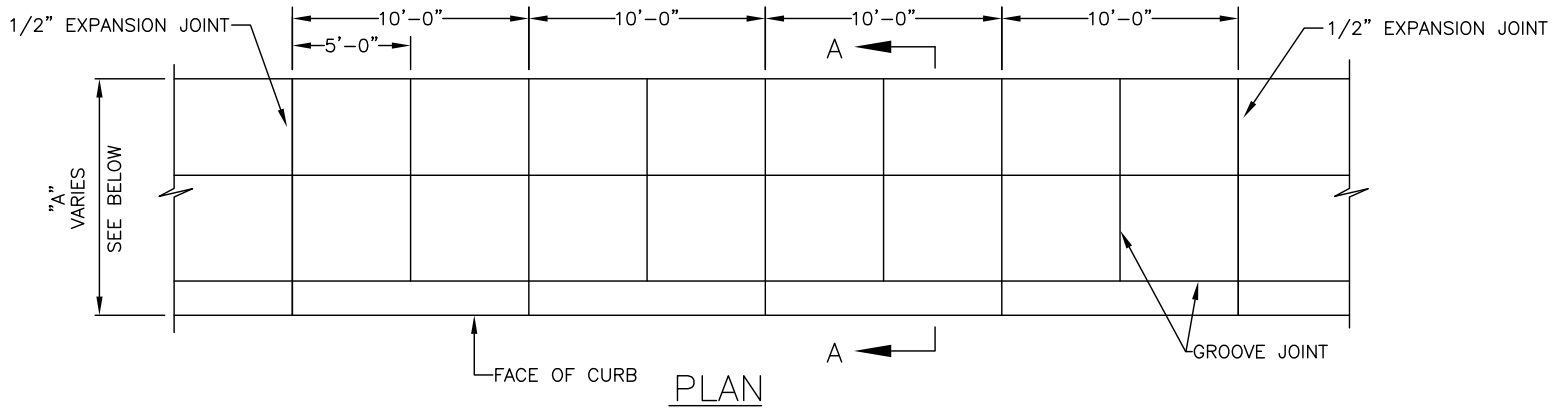

PLAN

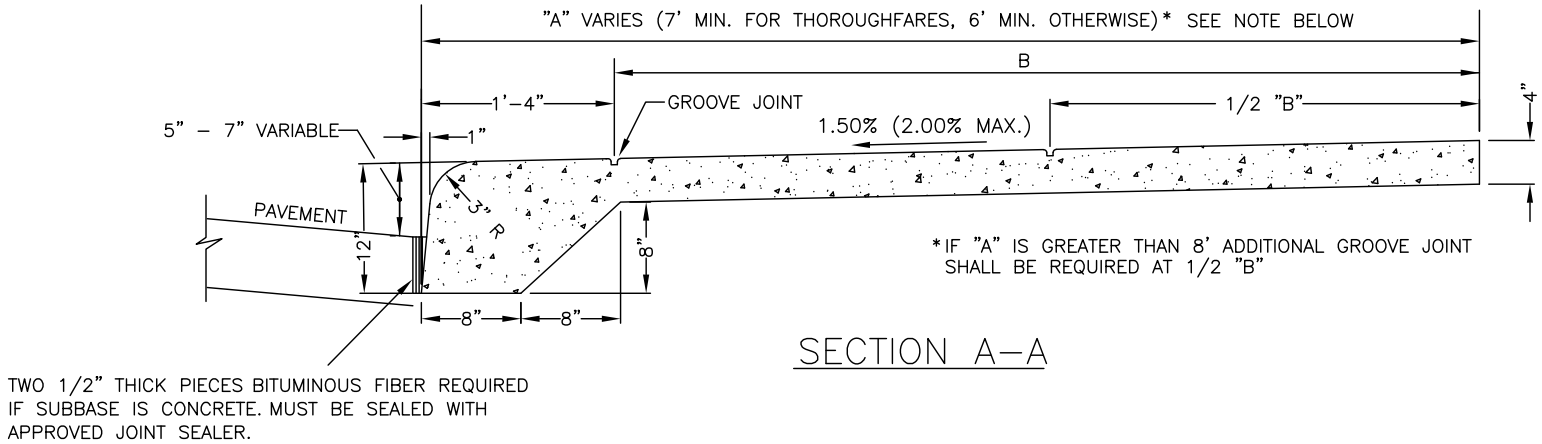

SECTION A-A

TWO 1/2" THICK PIECES BITUMINOUS FIBER REQUIRED IF SUBBASE IS CONCRETE. MUST BE SEALED WITH APPROVED JOINT SEALER.

GENERAL NOTES:

1. A GROOVE JOINT 1" DEEP WITH 1/3" RADII SHALL BE REQUIRED IN THE CONCRETE SIDEWALK AT 5' INTERVALS. ONE 1/2" EXPANSION JOINT WILL BE REQUIRED AT 40' INTERVALS. A 1/2" EXPANSION JOINT WILL BE REQUIRED WHERE THE SIDEWALK JOINS ANY RIGID STRUCTURE.
2. ALL CONCRETE TO BE 3600 P.S.I. COMPRESSIVE STRENGTH.
3. SEE STANDARD 106.1 FOR DETAIL OF EXPANSION JOINT AND GROOVE JOINT.
4. SEE STANDARD 108.1 FOR DETAIL OF DRIVEWAY.
5. MONOLITHIC CURB AND SIDEWALK TO BE CONSTRUCTED ONLY WHEN REPLACING GRANITE CURB OR AT LOCATIONS APPROVED BY THE TOWN ENGINEER.

NOT TO SCALE

TOWN OF WAXHAW LAND DEVELOPMENT STANDARDS	MONOLITHIC CONCRETE CURB AND SIDEWALK	STD. NO. 107.1	REV.

NOTES:

1. 1/2" EXPANSION JOINTS REQUIRE INSTALLATION OF ONE 1/2" THICK PIECE OF BITUMINOUS FIBER THROUGH THE ENTIRE SLAB. JOINT MATERIAL SHOULD BE PLACED FLUSH WITH CONCRETE.
2. TO LIMIT STORM WATER FLOW DOWN DRIVEWAYS, USE STANDARD 110.1 FOR DRIVEWAYS NEAR LOW POINTS.
3. ALL DRIVEWAYS MUST MEET THE CURRENT TOWN DRIVEWAY REGULATIONS AND NCDOT REQUIREMENTS FOR SPACING, SIGHT DISTANCE AND OFFSETS FROM PROPERTY LINES AND INTERSECTIONS.
4. "A" BREAKOVER SHALL BE 8% OR LESS (A = ALGEBRAIC DIFFERENCE).
5. PRIOR APPROVAL IS REQUIRED BY TOWN ENGINEER ON GRADES EXCEEDING WHAT ARE SHOWN.
6. ** PER NC IFC SECTION D103.2, FIRE APPARATUS ACCESS ROADS SHALL NOT EXCEED 10 PERCENT IN GRADE.

GENERAL NOTES:

- ALL CONCRETE TO BE 3600 P.S.I. COMPRESSIVE STRENGTH.
- ALL CURB, CURB AND GUTTER AND SIDEWALKS ARE TO BE REMOVED TO THE NEAREST JOINT BEYOND NEW CONSTRUCTION OR CUT WITH A SAW AND REMOVED.
- SAW CUT OR JOINT TO BE PERPENDICULAR TO EDGE OF EXISTING PAVEMENT.
- SEE STD. NO 106.1 FOR DETAIL OF EXPANSION JOINT AND GROOVE JOINT.

DRIVEWAY WIDTH		
TYPE DRIVEWAY	MINIMUM	MAXIMUM
TYPE I–RESIDENTIAL:		
LOCAL/COLLECTOR	10'	30'
THOROUGHFARE *	15'	30'
ONE–WAY TYPE II COMMERCIAL	20'	30'
TWO–WAY TYPE II COMMERCIAL	26'	50'

* MUST PROVIDE ON–SITE TURNAROUND

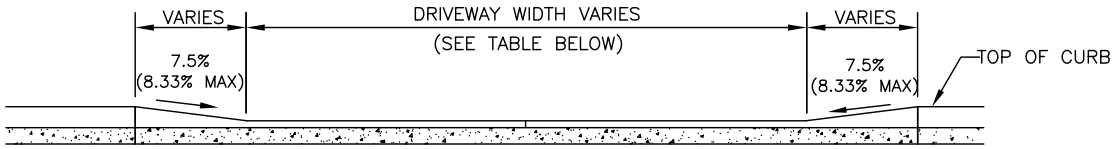

SECTION A – A

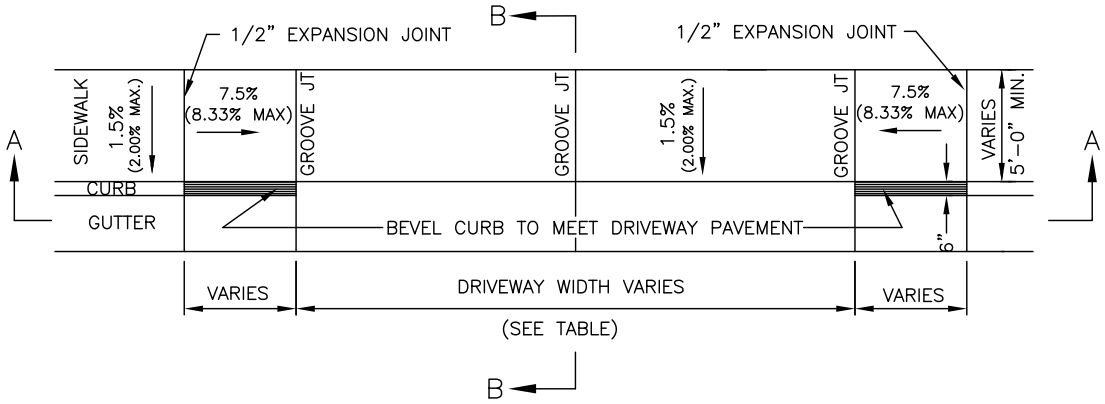

PLAN

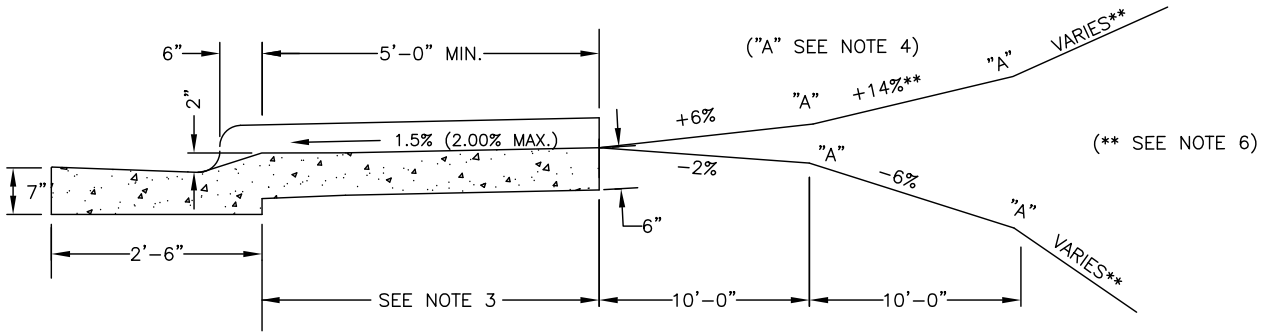

SECTION B – B

NOT TO SCALE

	TOWN OF WAXHAW LAND DEVELOPMENT STANDARDS	COMMERCIAL TYPE II AND RESIDENTIAL TYPE I DROP CURB DRIVEWAY WITH SIDEWALK ABUTTING CURB (2'–6" CURB AND GUTTER)	STD. NO. 108.1 / REV.

NOTE:

1. 1/2" EXPANSION JOINTS REQUIRE INSTALLATION OF ONE 1/2" THICK PIECE OF BITUMINOUS FIBER THROUGH THE ENTIRE SLAB. JOINT MATERIAL SHOULD BE PLACED FLUSH WITH CONCRETE.
2. TO LIMIT STORM WATER FLOW DOWN DRIVEWAYS, USE STANDARD 110.1 FOR DRIVEWAYS NEAR LOW POINTS.
3. ALL DRIVEWAYS MUST MEET THE CURRENT TOWN DRIVEWAY REGULATIONS AND NCDOT REQUIREMENTS FOR SPACING, SIGHT DISTANCE AND OFFSETS FROM PROPERTY LINES AND INTERSECTIONS.
4. "A" BREAKOVER SHALL BE 8% OR LESS (A = ALGEBRAIC DIFFERENCE).
5. PRIOR APPROVAL IS REQUIRED BY TOWN ENGINEER ON GRADES EXCEEDING WHAT ARE SHOWN.
6. ** PER NC IFC SECTION D103.2, FIRE APPARATUS ACCESS ROADS SHALL NOT EXCEED 10 PERCENT IN GRADE.

GENERAL NOTES:

- ALL CONCRETE TO BE 3600 P.S.I. COMPRESSIVE STRENGTH.
- ALL CURB, CURB AND GUTTER AND SIDEWALKS ARE TO BE REMOVED TO THE NEAREST JOINT BEYOND NEW CONSTRUCTION OR CUT WITH A SAW AND REMOVED.
- SAW CUT OR JOINT TO BE PERPENDICULAR TO EDGE OF EXISTING PAVEMENT.
- SEE STD. NO 106.1 FOR DETAIL OF EXPANSION JOINT AND GROOVE JOINT.

DRIVEWAY WIDTH		
TYPE DRIVEWAY	MINIMUM	MAXIMUM
TYPE I–RESIDENTIAL:		
LOCAL/COLLECTOR	10'	30'
THOROUGHFARE*	15'	30'
ONE–WAY TYPE II COMMERCIAL	20'	30'
TWO–WAY TYPE II COMMERCIAL	26'	50'

* MUST PROVIDE ON–SITE TURNAROUND

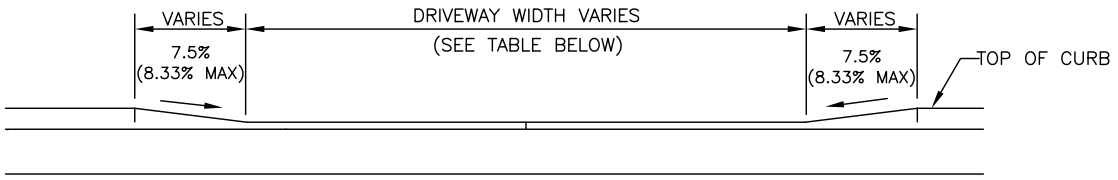

SECTION A – A

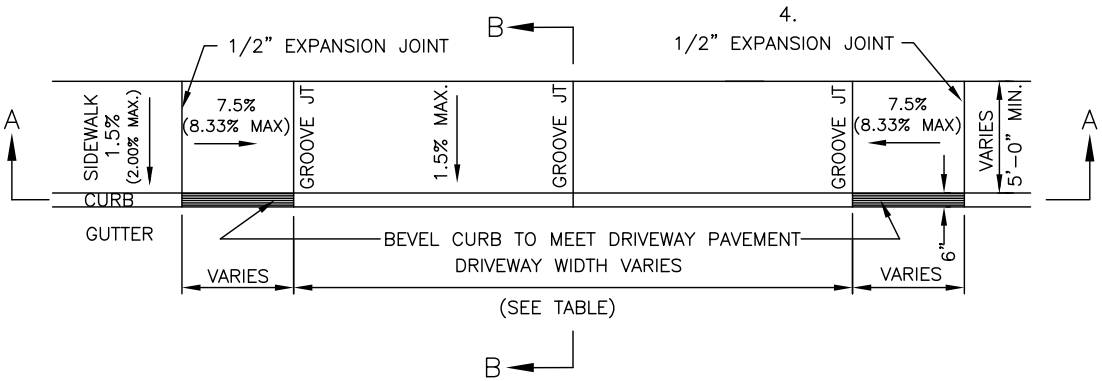

PLAN

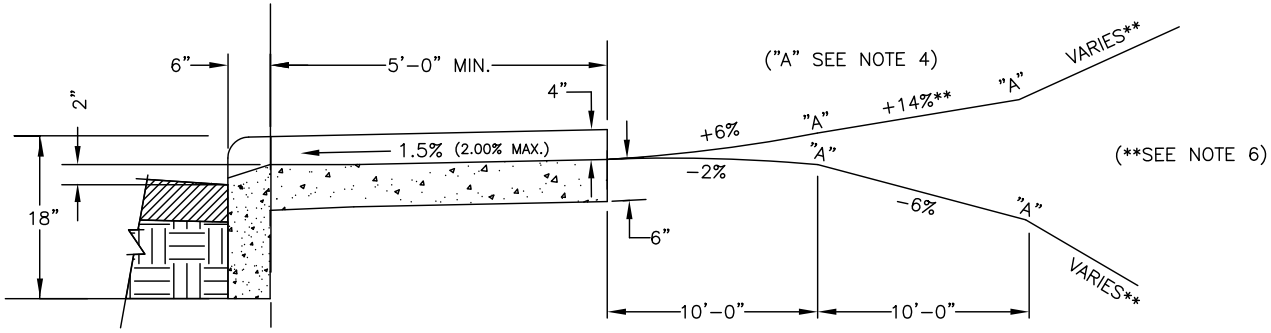

SECTION B – B

NOT TO SCALE

TOWN OF WAXHAW
LAND DEVELOPMENT STANDARDS

COMMERCIAL TYPE II AND RESIDENTIAL TYPE I DROP CURB DRIVEWAY WITH SIDEWALK ABUTTING CURB (6" X 18" VERTICAL CURB)

STD. NO.	REV.
109.1	

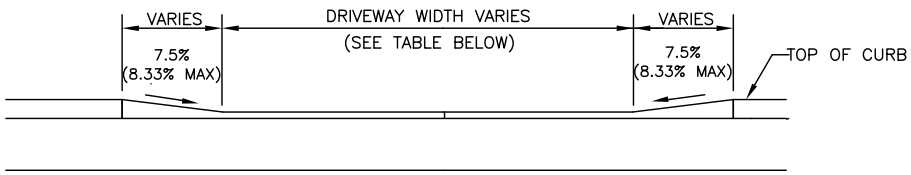

SECTION A – A 2'x 6"

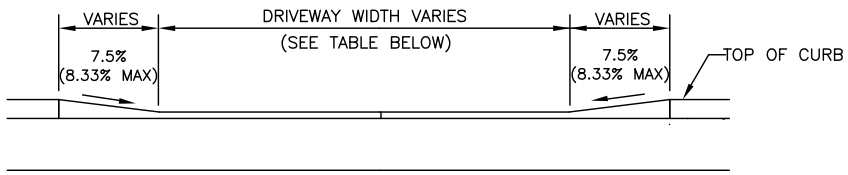

SECTION A – A 6"x18"

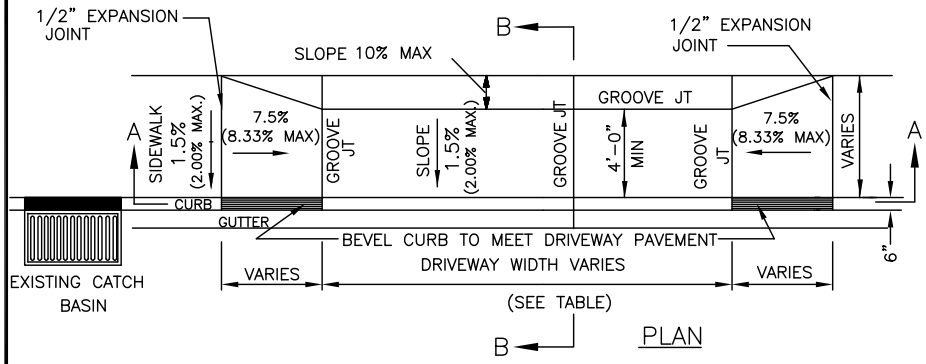

PLAN

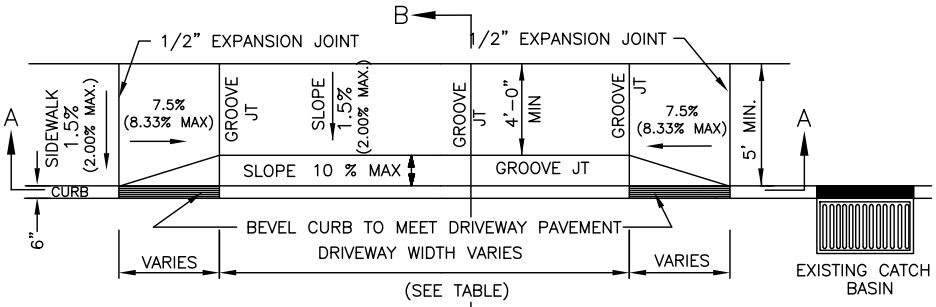

PLAN

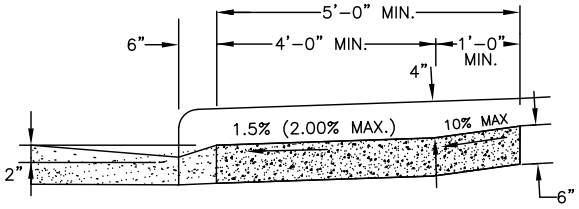

SECTION B – B

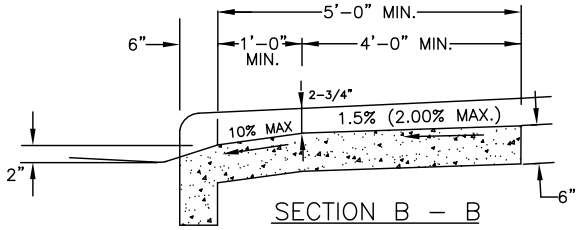

SECTION B – B

DRIVEWAY WIDTH		
TYPE DRIVEWAY	MINIMUM	MAXIMUM
TYPE I–RESIDENTIAL:		
LOCAL/COLLECTOR	10'	30'
THOROUGHFARE*	15'	30'
ONE–WAY TYPE II COMMERCIAL	20'	30'
TWO–WAY TYPE II COMMERCIAL	26'	50'

* MUST PROVIDE ON–SITE TURNAROUND

NOTES

1. USED AT LOW POINTS IN ROADWAYS WITH 2'–6" CURB AND GUTTER OR 6" X 18" CURB AS DIRECTED BY TOWN ENGINEER.
2. SEE STANDARDS 108.1 FOR ADDITIONAL DETAILS.
3. ALL DRIVEWAYS MUST MEET THE CURRENT TOWN DRIVEWAY REGULATIONS AND NCDOT REQUIREMENTS FOR SPACING, SIGHT DISTANCE AND OFFSETS FROM PROPERTY LINES AND INTERSECTIONS.
4. JOINT MATERIAL SHOULD BE PLACED FLUSH WITH CONCRETE.

NOT TO SCALE

TOWN OF WAXHAW
LAND DEVELOPMENT STANDARDS

COMMERCIAL TYPE II AND RESIDENTIAL TYPE I DROP CURB DRIVEWAY WITH SIDEWALK ABUTTING CURB NEAR LOW POINTS

STD. NO.	REV.
110.1	

NOTES:

1. ALL CONCRETE TO BE 3600 P.S.I.

2. ALL CURB OR CURB AND GUTTER AND SIDEWALKS ARE TO BE REMOVED TO THE NEAREST JOINT BEYOND NEW CONSTRUCTION OR CUT WITH A SAW AND REMOVED. SAW CUT OR JOINT TO BE PERPENDICULAR TO EDGE OF EXISTING PAVEMENT. SEE STD. NO. 102.1 FOR JOINT DETAIL.

3. ALL DRIVEWAYS MUST MEET THE CURRENT TOWN DRIVEWAY REGULATIONS AND NCDOT REQUIREMENTS FOR SPACING SIGHT DISTANCE AND OFFSETS FROM PROPERTY LINES AND INTERSECTIONS.

4. "A BREAKOVER SHALL BE 8% OR LESS (A = ALGEBRAIC DIFFERENCE)

5. PRIOR APPROVAL IS REUIRED BY TOWN ENGINEER ON GRADES EXCEEDING WHAT ARE SHOWN.

6. ** PER NC IFC SECTION D103.2, FIRE APPARATUS ACCESS ROADS SHALL NOT EXCEED 10 PERCENT in GRADE.

7. JOINT MATERIAL SHOULD BE PLACED FLUSH WITH CONCRETE.

DRIVEWAY WIDTH		
DRIVEWAY TYPE	MINIMUM	MAXIMUM
LOCAL/COLLECTOR	10'	30'
THOROUGHFARE*	15'	30'

* MUST PROVIDE ON-SITE TURNAROUND

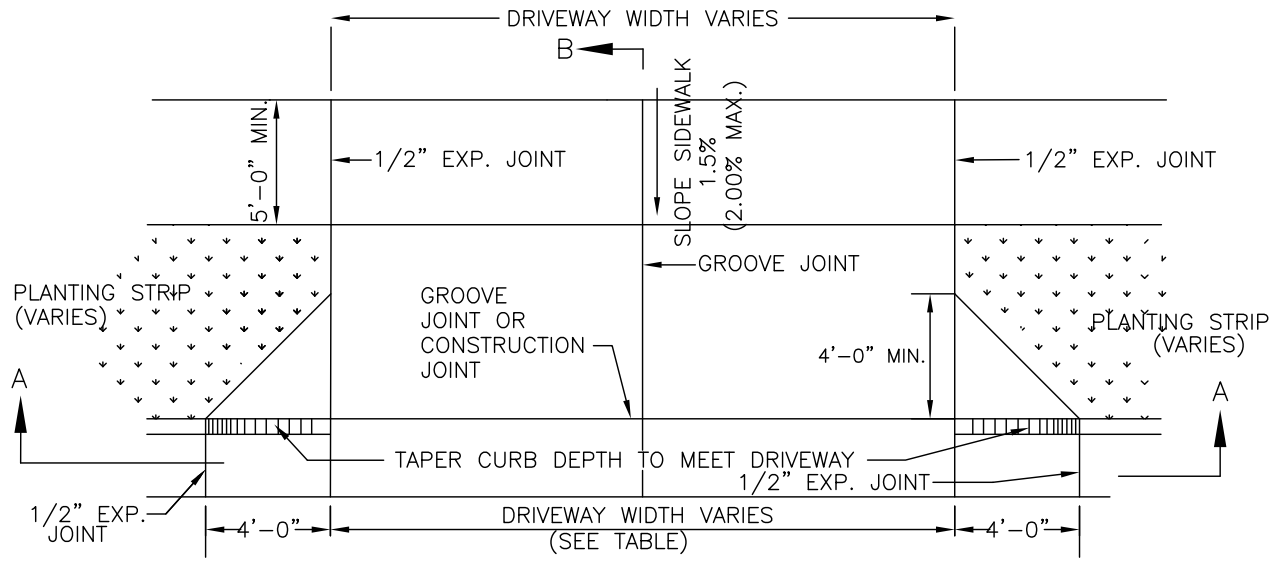

PLAN VIEW

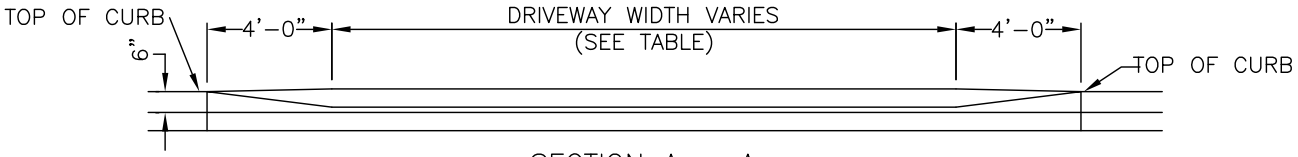

SECTION A – A

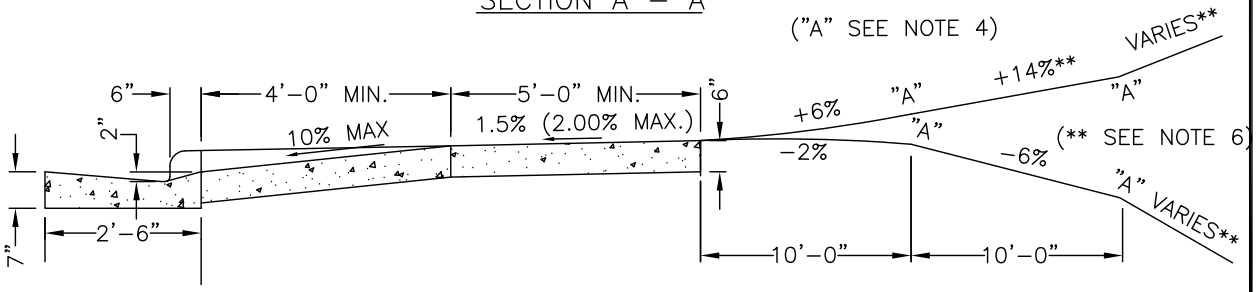

SECTION B – B

NOT TO SCALE

	TOWN OF WAXHAW LAND DEVELOPMENT STANDARDS	RESIDENTIAL DROP CURB TYPE I DRIVEWAY WITH PLANTING STRIP (2'-6" CURB AND GUTTER)	STD. NO. 111.1 / REV. 8/19

NOTES:

1. ALL CONCRETE TO BE 3600 P.S.I. COMPRESSIVE STRENGTH.
2. AT ALL DRIVEWAYS, SIDEWALKS TO BE REMOVED TO THE NEAREST JOINT BEYOND NEW CONSTRUCTION OR CUT WITH A SAW AND REMOVED. SAW CUT OR JOINT TO BE PERPENDICULAR TO EDGE OF EXISTING PAVEMENT. SEE ST. NO. 102.1 FOR JOINT DETAIL.
3. ALL DRIVEWAYS MUST MEET THE CURRENT TOWN DRIVEWAY REGULATIONS AND NCDOT REQUIREMENTS SIGHT DISTANCE AND OFFSETS FROM PROPERTY LINES AND INTERSECTIONS.
4. "A" BREAKOVER SHALL BE 8% OR LESS (A = ALGEBRAIC DIFFERENCE).
5. PRIOR APPROVAL IS REQUIRED BY TOWN ENGINEER ON GRADES EXCEEDING WHAT ARE SHOWN.
6. **PER NC IFC SECTION D103.2, FIRE APPARATUS ROADS SHALL NOT EXCEED 10 PERCENT IN GRADE.
7. JOINT MATERIAL SHOULD BE PLACED FLUSH WITH CONCRETE.

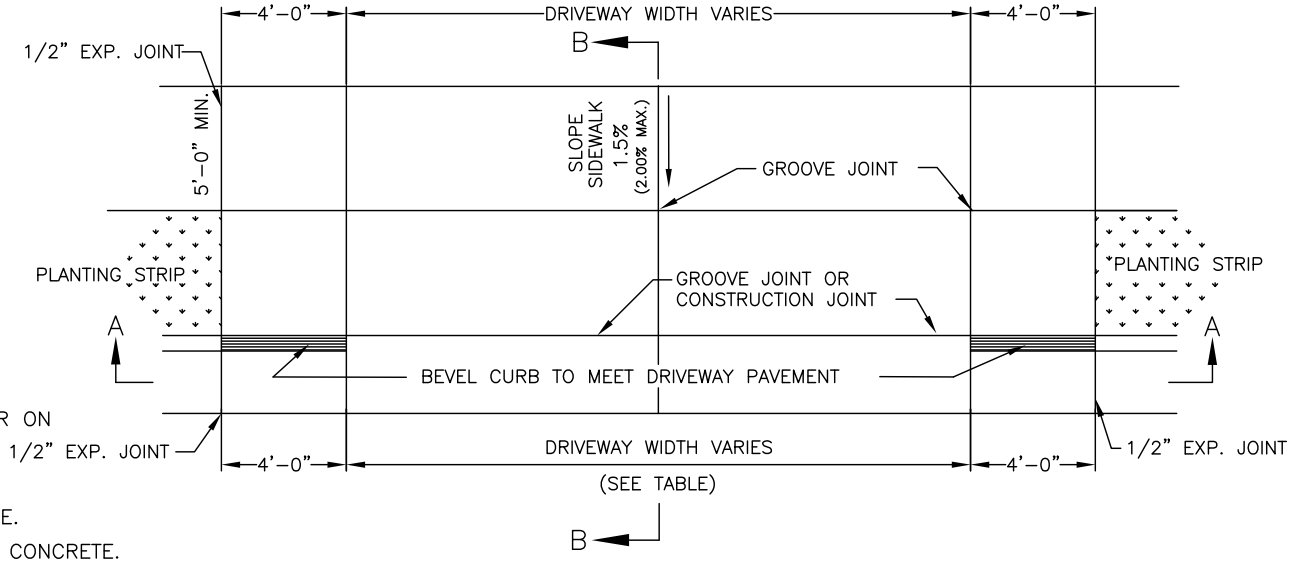

PLAN VIEW

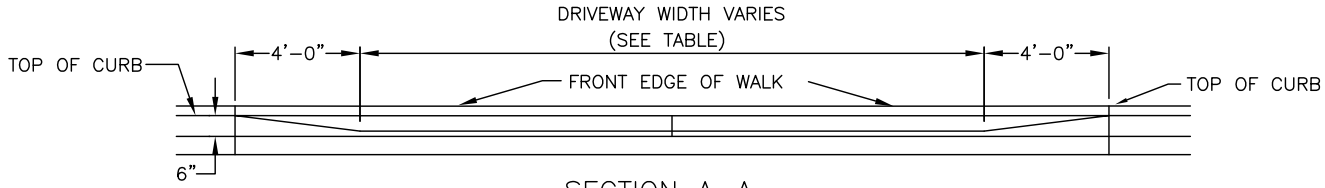

SECTION A–A

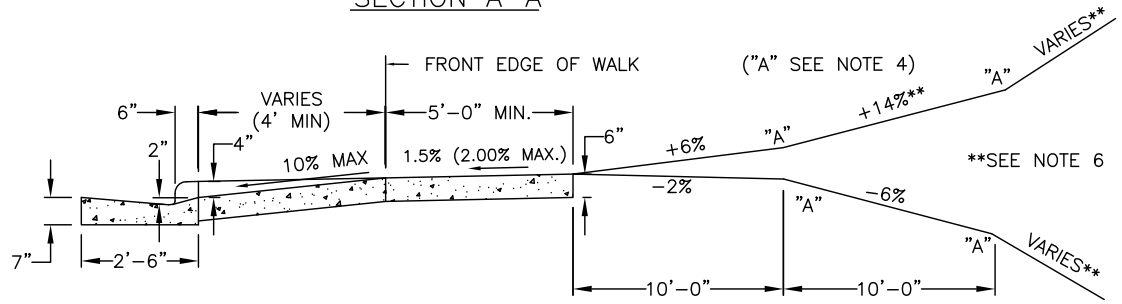

SECTION B–B

NOT TO SCALE

DRIVEWAYS CLASSIFICATION		
TYPE DRIVEWAYS	MINIMUM	MAXIMUM
ONE–WAY TYPE II – COMMERCIAL	20'	30'
TWO–WAY TYPE II – COMMERCIAL	26'	50'*

* NEED MORE THAN ONE CONTRACTION JOINT IN CENTER.

TOWN OF WAXHAW
LAND DEVELOPMENT STANDARDS

COMMERCIAL DROP CURB TYPE II DRIVEWAY WITH PLANTING STRIP (2'–6" CURB AND GUTTER)

STD. NO.	REV.
112.1	

NOTES:

1. ALL CONCRETE TO BE 3600 P.S.I.
2. ALL CURB OR CURB AND GUTTER AND SIDEWALK ARE TO BE REMOVED TO THE NEAREST JOINT BEYOND NEW CONSTRUCTION OR CUT WITH A SAW AND REMOVED. SAW CUT OR JOINT TO BE PERPENDICULAR TO EDGE OF EXISTING PAVEMENT. SEE STD. NO. 102.1 FOR JOINT DETAIL.
3. ALL DRIVEWAYS MUST MEET THE CURRENT TOWN DRIVWAY REGULATIONS AND NCDOT REQUIREMENTS FOR SPACING, SIGHT DISTANCE, AND OFFSETS FROM PROPERTY LINES AND INTERSECTIONS.
4. "A" BREAKOVER SHALL BE 8% OR LESS.
5. PRIOR APPROVAL IS REQUIRED BY TOWN ENGINEER ON GRADES EXCEEDING WHAT ARE SHOWN.
6. ** PER NC IFC SECTION D103.2, FIRE APPARATUS ACCESS ROADS SHALL NOT EXCEED 10 PERCENT IN GRADE.
7. JOINT MATERIAL SHOULD BE PLACED FLUSH WITH CONCRETE.

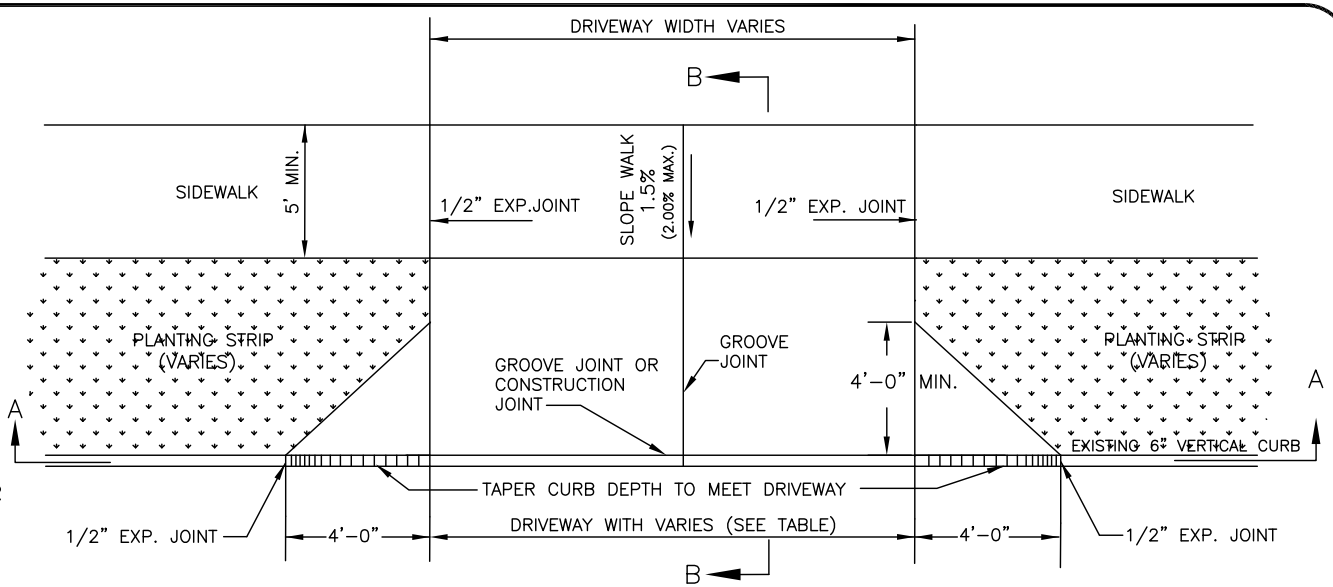

PLAN VIEW

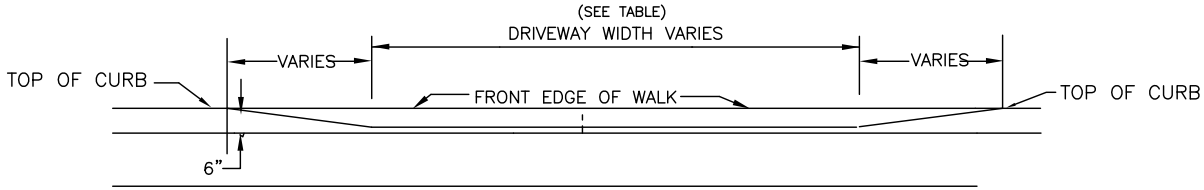

SECTION A–A (ALONG FLOW LINE)

DRIVEWAY WIDTH		
DRIVEWAY TYPE	MINIMUM	MAXIMUM
LOCAL/COLLECTOR	10'	30'
THOROUGHFARE*	15'	30'

* MUST PROVIDE ON-SITE TURNAROUND

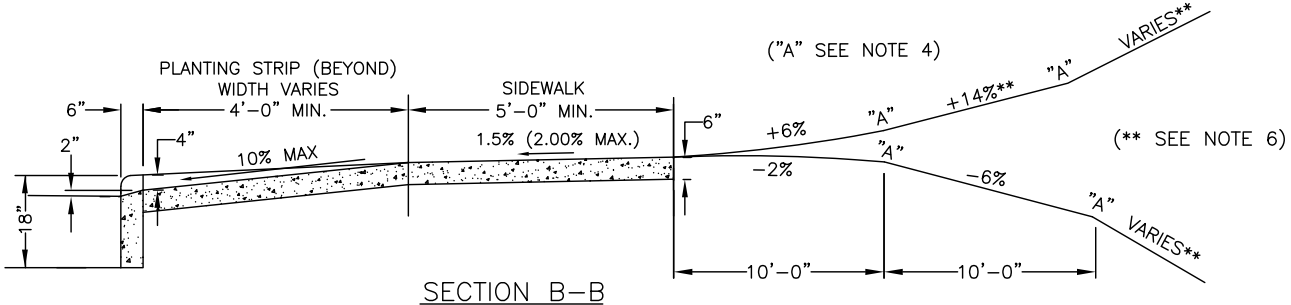

SECTION B–B

NOT TO SCALE

	TOWN OF WAXHAW LAND DEVELOPMENT STANDARDS	RESIDENTIAL DROP CURB TYPE I DRIVEWAY WITH PLANTING STRIP (6" X 18" VERTICAL CURB)	STD. NO. 113.1 / REV.

NOTES:

1. ALL CONCRETE TO BE 3600 P.S.I.
2. ALL CURB OR CURB AND GUTTER AND SIDEWALK ARE TO BE REMOVED TO THE NEAREST JOINT BEYOND NEW CONSTRUCTION OR CUT WITH A SAW AND REMOVED. SAW CUT OR JOINT TO BE PERPENDICULAR TO EDGE OF EXISTING PAVEMENT. SEE STD. NO. 102.1 FOR JOINT DETAIL.
3. ALL DRIVEWAYS MUST MEET THE CURRENT TOWN DRIVWAY REGULATIONS AND NCDOT REQUIREMENTS FOR SPACING,SIGHT DISTANCE, AND OFFSETS FROM PROPERTY LINES AND INTERSECTIONS.
4. "A" BREAKOVER SHALL BE 8% OR LESS.
5. PRIOR APPROVAL IS REQUIRED BY TOWN ENGINEER ON GRADES EXCEEDING WHAT ARE SHOWN.
6. PER NC IFC SECTION D103.2, FIRE APPARATUS ACCESS ROADS SHALL NOT EXCEED 10 PERCENT IN GRADE.
7. JOINT MATERIAL SHOULD BE FLUSH WITH CONCRETE.

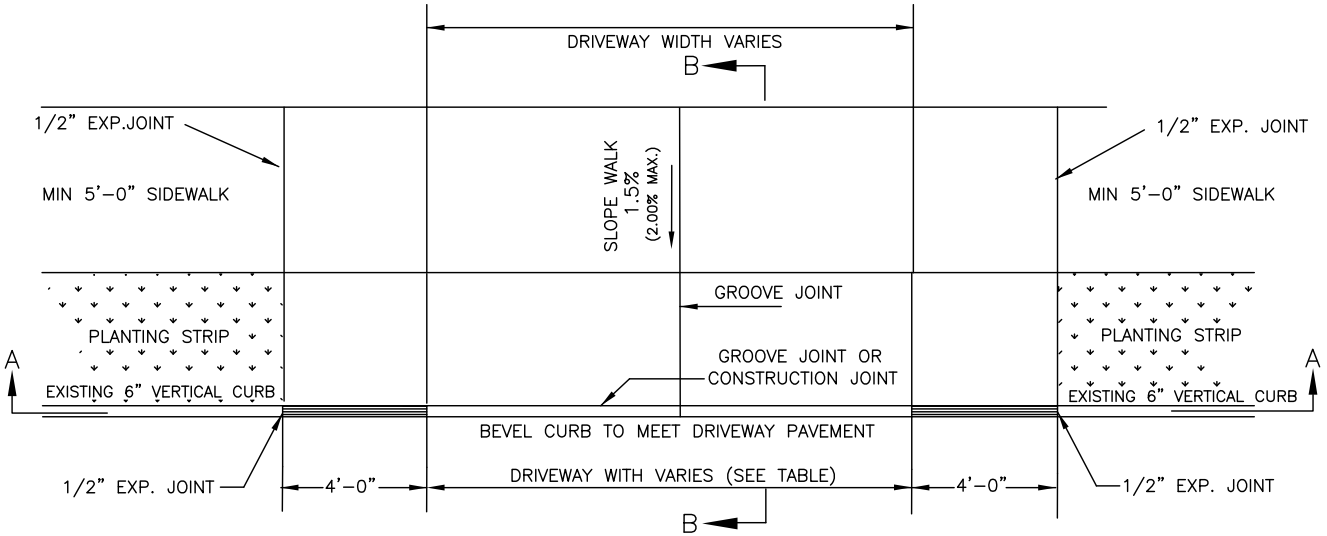

PLAN VIEW

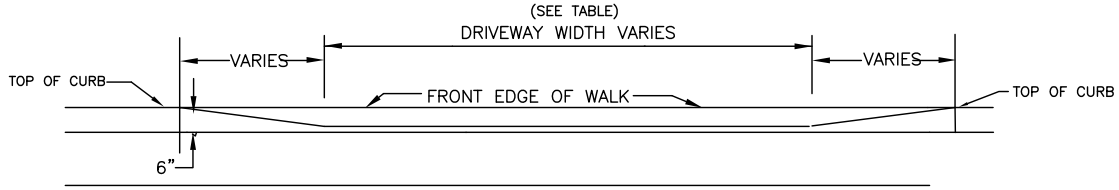

SECTION A–A (ALONG FLOW LINE)

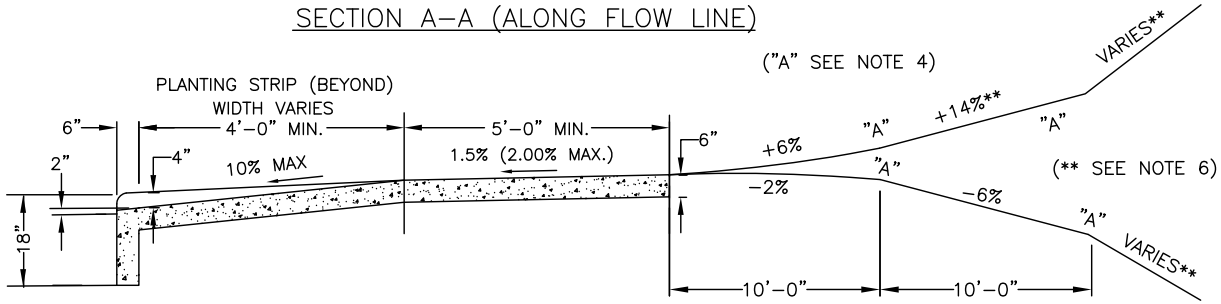

SECTION B–B

DRIVEWAYS CLASSIFICATION		
TYPE DRIVEWAYS	MINIMUM	MAXIMUM
ONE–WAY TYPE II–COMMERCIAL	20'	30'
TWO–WAY TYPE II–COMMERCIAL	26'	50'*

* NEED MORE THAN ONE CONTRACTION JOINT IN CENTER

NOT TO SCALE

TOWN OF WAXHAW
LAND DEVELOPMENT STANDARDS

COMMERCIAL DROP CURB TYPE II DRIVEWAY WITH PLANTING STRIP (6" X 18" VERTICAL CURB)

STD. NO.	REV.
114.1	

NOTES:

1. ALL CONCRETE TO BE 3600 P.S.I. COMPRESSIVE STRENGTH.
2. AT ALL DRIVEWAYS, SIDEWALKS TO BE REMOVED TO THE NEAREST JOINT BEYOND NEW CONSTRUCTION OR CUT WITH A SAW AND REMOVED. SAW CUT OR JOINT TO BE PERPENDICULAR TO EDGE OF EXISTING PAVEMENT. SEE STD. NO. 102.1 FOR JOINT DETAIL. PAY LIMITS FOR WORK DONE UNDER TOWN OF WAXHAW CONTRACTS ARE FROM EXPANSION JOINT TO EXPANSION JOINT, FROM LIP OF CURB TO BACK OF SIDEWALK.
3. ALL DRIVEWAYS MUST MEET THE CURRENT TOWN DRIVEWAY REGULATIONS AND NCDOT REQUIREMENTS FOR SPACING, SIGHT DISTANCE, AND OFFSETS FROM PROPERTY LINES AND INTERSECTIONS.
4. ALGEBRAIC DIFFERENCE IN GRADE ("A") BETWEEN SLOPES SHALL BE 8% OR LESS.
5. RADII MUST BE MINIMUM 6 FEET OR THE WIDTH OF THE PLANTING STRIP, WHICHEVER IS GREATER. RADII GREATER THAN THESE MINIMUMS MAY BE REQUIRED BY NCDOT ON A CASE-BY-CASE BASIS. FOR RADII GREATER THAN 6 FEET, THE RADII ARE TO CONTINUE AS A BAND AT-GRADE THROUGH THE SIDEWALK.
6. PER NC IFC SECTION D103.2, FIRE APPARATUS ACCESS ROADS SHALL NOT EXCEED 10 PERCENT IN GRADE.
7. PAVERS USED IN DRIVEWAY MUST HAVE A THICKNESS OF 3 INCHES.
8. JOINT MATERIAL SHOULD BE PLACED FLUSH WITH CONCRETE.

DRIVEWAY DIMENSIONS		
OPERATION/RADIUS	MINIMUM	MAXIMUM
ONE-WAY WITH 6-12 FT. RADII	20'	30'
ONE-WAY WITH 13+ FT. RADII	15'	25'
TWO-WAY WITH 6-12 FT. RADII	26'	50'
TWO-WAY WITH 13+ FT. RADII	22'	40'

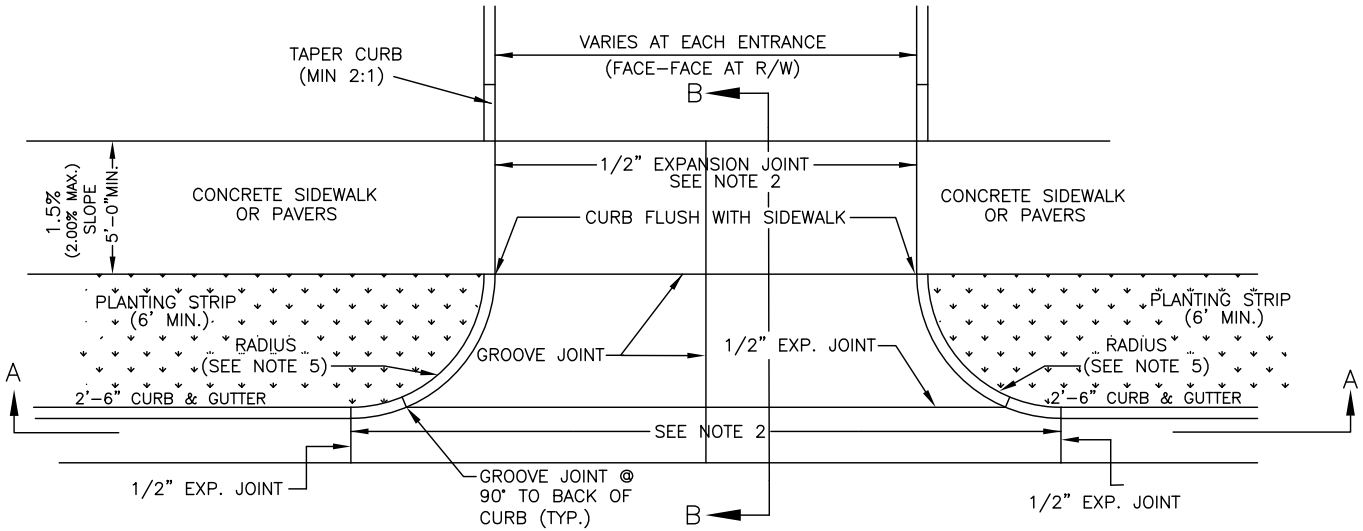

PLAN VIEW

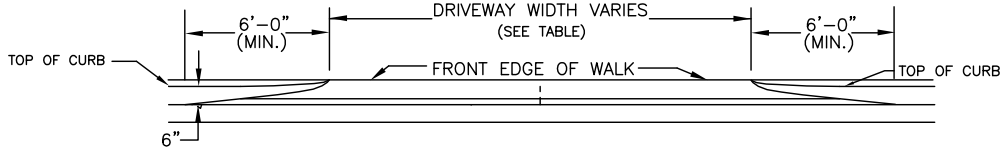

SECTION A-A (ALONG FLOW LINE)

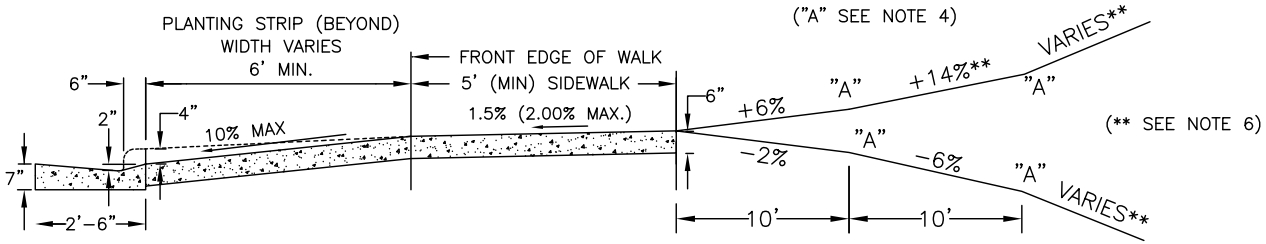

SECTION B-B

NOT TO SCALE

TOWN OF WAXHAW
LAND DEVELOPMENT STANDARDS

TYPE II-MODIFIED DRIVEWAY DETAIL WITH WIDE PLANTING STRIP AND STANDARD CURB

STD. NO.	REV.
115.1	8/19

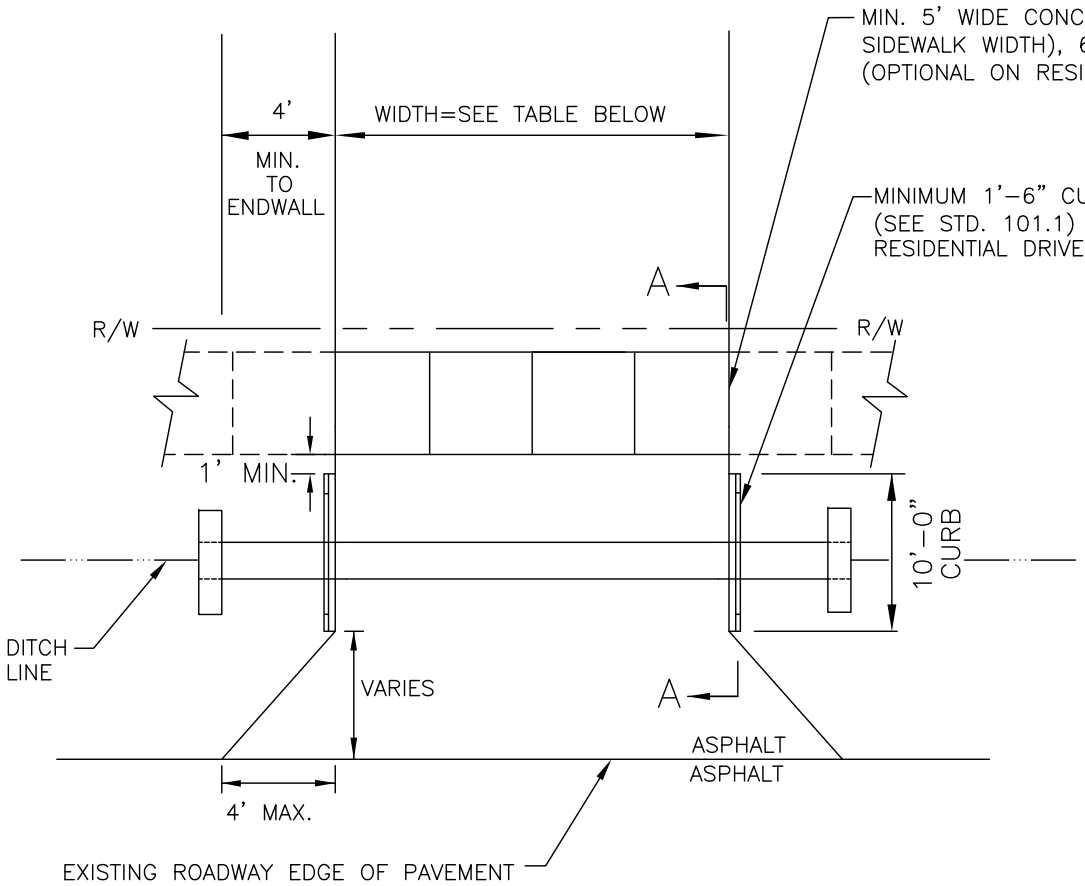

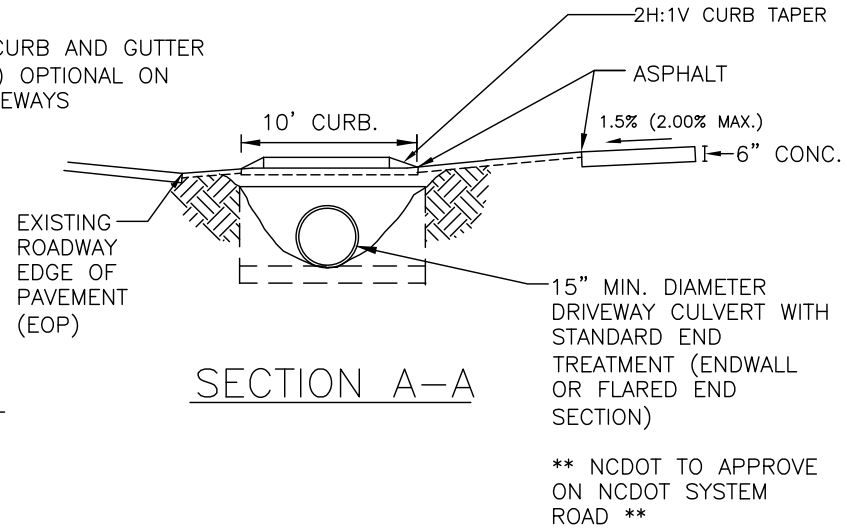

SECTION A–A

DRIVEWAY WIDTH		
DRIVEWAY TYPE	MINIMUM	MAXIMUM
RESIDENTIAL:		
LOCAL/COLLECTOR	10'	30'
THOROUGHFARE*	15'	30'
ONE–WAY COMMERCIAL	20'	30'
TWO–WAY COMMERCIAL	26'	50'

* MUST PROVIDE ON–SITE TURNAROUND

NOTES:

1. TO BE USED ON ROADS WITHOUT CURB AND GUTTER AND WHERE CURB AND GUTTER IS NOT BEING INSTALLED. (MUST MEET BOTH CRITERIA)
2. ALL CONCRETE TO BE 3600 P.S.I. COMPRESSIVE STRENGTH.
3. THIS STANDARD IS TYPICALLY FOR COMMERCIAL APPLICATION. FOR RESIDENTIAL DRIVEWAY CONSTRUCTION, USE AT THE DISCRETION OF THE TOWN ENGINEER ONLY.

NOT TO SCALE

TOWN OF WAXHAW
LAND DEVELOPMENT STANDARDS

TYPE IV DRIVEWAY
ROADS WITHOUT CURB & GUTTER

STD. NO.	REV.
116.1	

GENERAL NOTES:

ALL CONCRETE TO BE 3600 P.S.I. COMPRESSIVE STRENGTH.

A 1/2" EXPANSION JOINT WILL BE REQUIRED WHERE WHERE THE SIDEWALK JOINS ANY RIGID STRUCTURE. SEE STANDARD 102.1

THIS DETAIL TO BE USED ONLY IN CONJUNCTION WITH MONOLITHIC SIDEWALK AS ON STANDARD NO. 107.1

NOTES:

1. ALL DRIVEWAYS MUST MEET THE CURRENT TOWN DRIVEWAY REGULATIONS AND NCDOT REQUIREMENTS FOR SPACING, SIGHT DISTANCES, AND OFFSETS FROM PROPERTY LINES AND INTERSECTIONS.

DRIVEWAY WIDTH		
TYPE DRIVEWAY	MINIMUM	MAXIMUM
TYPE I–RESIDENTIAL:		
LOCAL/COLLECTOR	10'	30'
THOROUGHFARE*	15'	30'
ONE–WAY TYPE II COMMERCIAL	20'	30'
TWO–WAY TYPE II COMMERCIAL	26'	50'

* MUST PROVIDE ON–SITE TURNAROUND

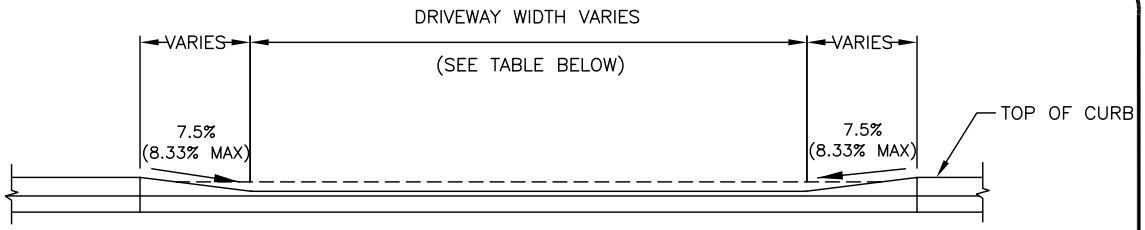

SECTION A–A

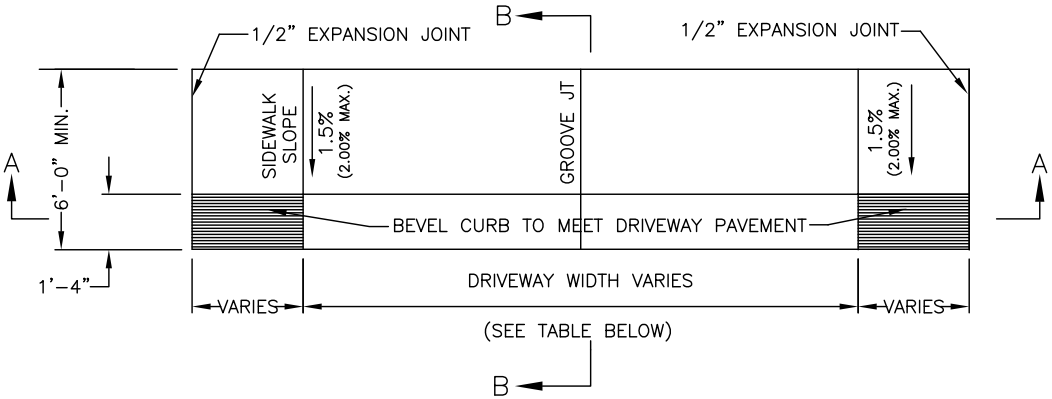

PLAN

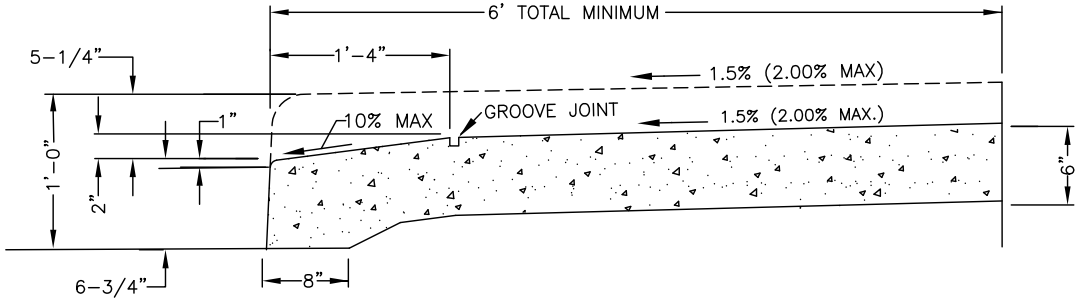

SECTION B–B

NOT TO SCALE

TOWN OF WAXHAW
LAND DEVELOPMENT STANDARDS

DROP CURB DRIVEWAY
MONOLITHIC CONCRETE CURB AND SIDEWALK

STD. NO.	REV.
117.1	

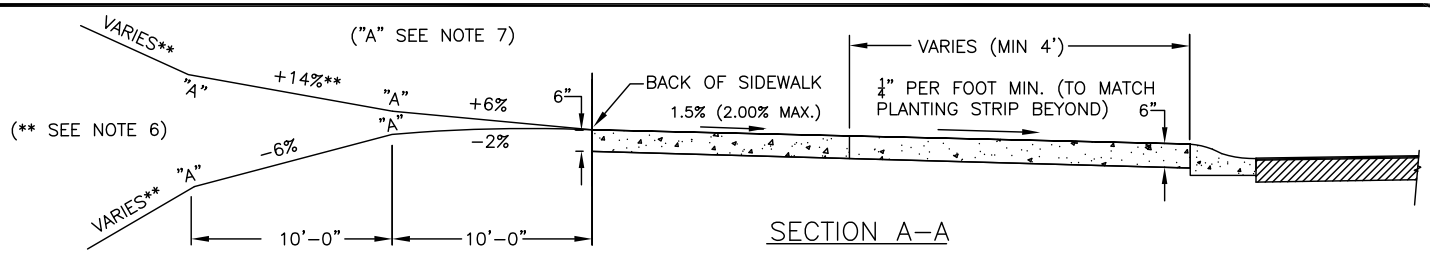

SECTION A–A

NOTES:

1. THE ELEVATION OF THE SIDEWALK SHALL BE NOT LESS THAN SIX INCHES OR MORE THAN EIGHTEEN INCHES ABOVE THE ROADWAY CROWN. THIS ELEVATION DIFFERENTIAL SHALL BE CONSISTENT WITHIN EACH BLOCK.
2. ALL CONCRETE TO BE 3600 PSI STRENGTH.
3. ALL CONSTRUCTION PRACTICES, INCLUDING COMPACTION, CURING, FINISHING, ETC. SHALL BE IN ACCORDANCE WITH THE TOWN OF WAXHAW'S SPECIAL PROVISIONS SECTION OF THE LAND DEVELOPMENT STANDARDS.
4. PLANTING STRIP SHALL BE GRADED WITH A CROSS SLOPE BETWEEN 1/4 IN. PER FOOT AND 1 1/4 IN. PER FOOT EXCEPT WHERE EXCESSIVE NATURAL GRADES MAKE THIS REQUIREMENT IMPRACTICAL. IN SUCH CASES, THE TOWN ENGINEER MAY AUTHORIZE A SUITABLE GRADE
5. ALL DRIVEWAYS MUST MEET THE CURRENT TOWN DRIVEWAY REGULATIONS AND NCDOT REQUIREMENTS, INCLUDING BUT NOT LIMITED TO SPACING, SIGHT DISTANCE, AND OFFSETS FROM PROPERTY LINES AND INTERSECTIONS.
6. **PER NC IFC SECTION D103.2, FIRE APPARATUS ACCESS ROADS SHALL NOT EXCEED 10 PERCENT IN GRADE.
7. "A" BREAKOVER SHALL BE 8% OR LESS (A = ALGEBRAIC DIFFERENCE).
8. PRIOR APPROVAL IS REQUIRED BY TOWN ENGINEER ON GRADES EXCEEDING WHAT ARE SHOWN.

DRIVEWAY WIDTH		
	X	Y
TYPE I–RESIDENTIAL:		
LOCAL/COLLECTOR	10' MIN.	30' MAX.***
THOROUGHFARE *	15' MIN.	30' MAX.***

* MUST PROVIDE ON–SITE TURNAROUND
*** MAXIMUM WIDTH INCLUDES OPTIONAL WINGS

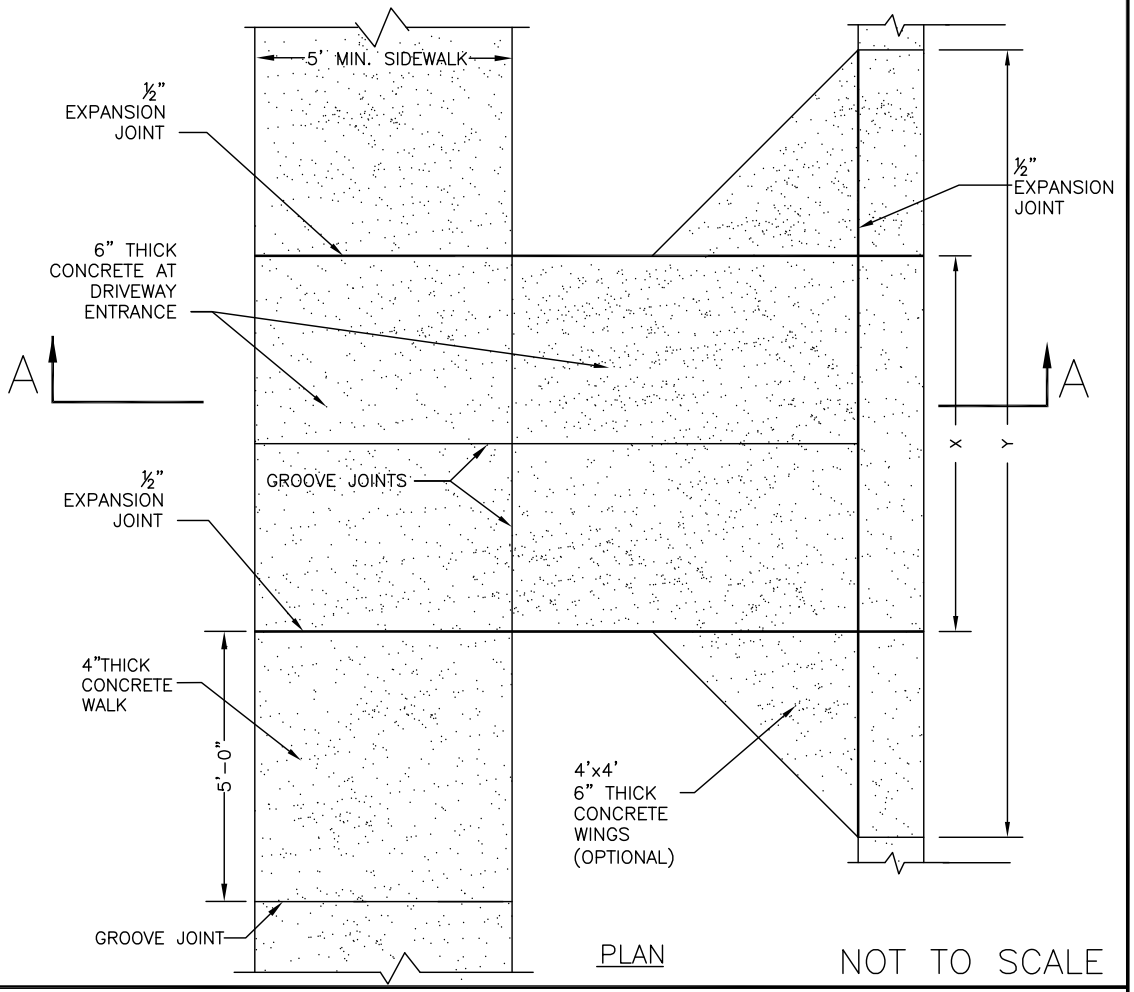

PLAN

NOT TO SCALE

TOWN OF WAXHAW
LAND DEVELOPMENT STANDARDS

RESIDENTIAL DRIVEWAY (TYPE I) FOR 2'–0" VALLEY GUTTER

STD. NO.	REV.
118.1	

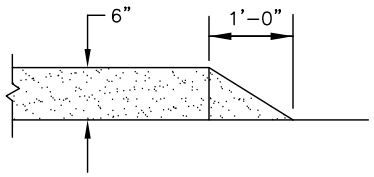

SECTION B–B

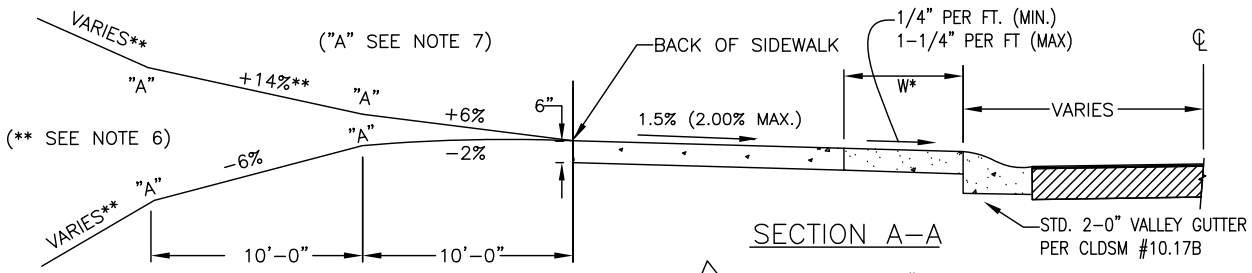

SECTION A–A

NOTES:

1. THE ELEVATION OF THE SIDEWALK SHALL BE NOT LESS THAN SIX INCHES OR MORE THAN EIGHTEEN INCHES ABOVE THE ROADWAY CROWN. THIS ELEVATION DIFFERENTIAL SHALL BE CONSISTENT WITHIN EACH BLOCK.
2. ALL CONCRETE TO BE 3600 PSI STRENGTH.
3. ALL CONSTRUCTION PRACTICES, INCLUDING COMPACTION, CURING, FINISHING, ETC. SHALL BE IN ACCORDANCE WITH THE TOWN OF WAXHAW ENGINEEERING DESIGN AND CONSTRUCTION STANDARDS PROCEDURES MANUAL.
4. PLANTING STRIP SHALL BE GRADED WITH A CROSS SLOPE BETWEEN 1/4 IN. PER FOOT AND 1 1/4 IN. PER FOOT EXCEPT WHERE EXCESSIVE NATURAL GRADES MAKE THIS REQUIREMENT IMPRACTICAL. IN SUCH CASES, THE TOWN ENGINEER MAY AUTHORIZE A SUITABLE GRADE
5. ALL DRIVEWAYS MUST MEET THE CURRENT TOWN DRIVEWAY REGULATIONS AND NCDOT REQUIREMENTS, INCLUDING BUT NOT LIMITED TO SPACING, SIGHT DISTANCE, AND OFFSETS FROM PROPERTY LINES AND INTERSECTIONS.
6. PER NC IFC SECTION D103.2, FIRE APPARATUS ACCESS ROADS SHALL NOT EXCEED 10 PERCENT IN GRADE.
7. "A" BREAKOVER SHALL BE 8% OR LESS (A=ALGEBRAIC DIFFERENCE).
8. PRIOR APPROVAL IS REQUIRED BY TOWN ENGINEER ON GRADES EXCEEDING WHAT ARE SHOWN.

DRIVEWAY WIDTH		
TYPE DRIVEWAY	MINIMUM	MAXIMUM
ONE–WAY TYPE II COMMERCIAL	20'	30'
TWO–WAY TYPE II COMMERCIAL	26'	50'

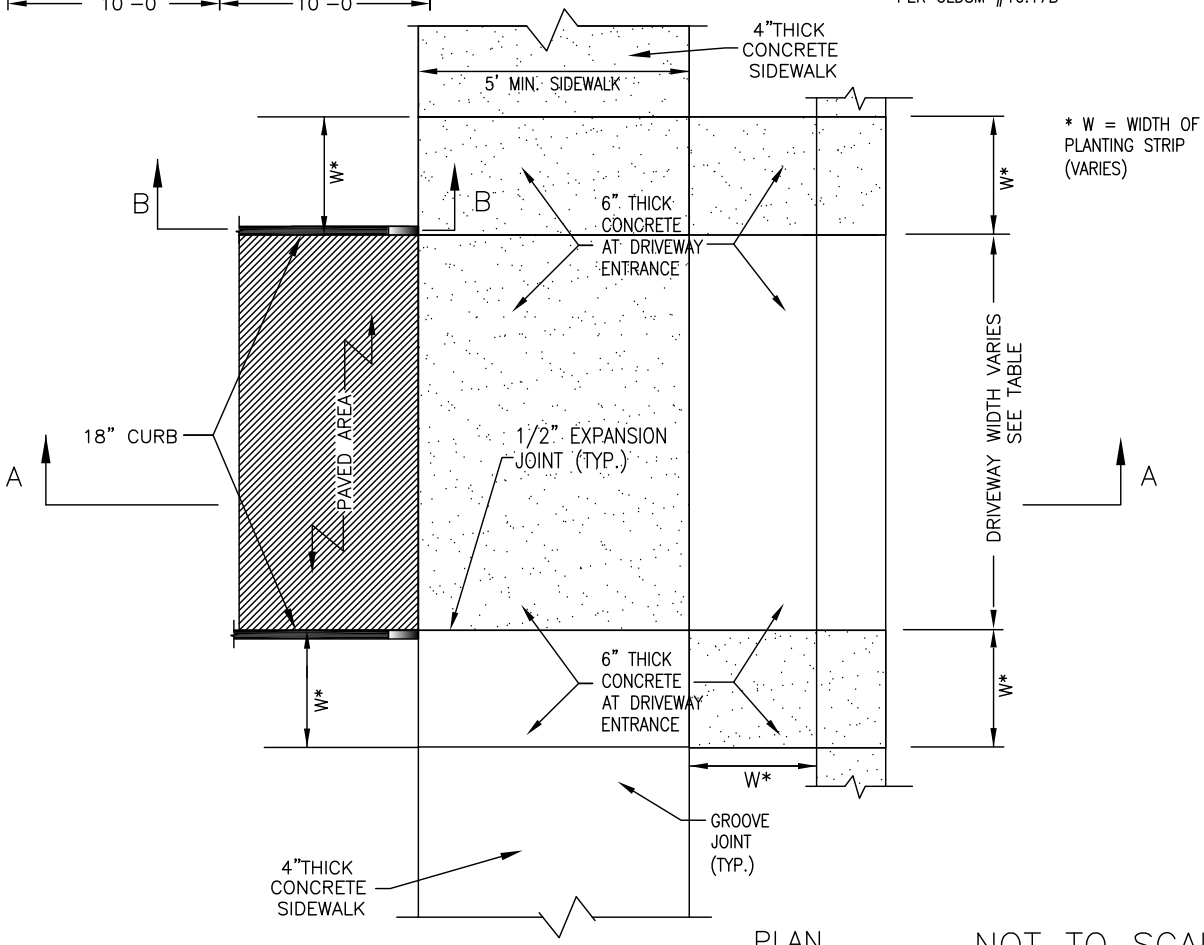

PLAN

NOT TO SCALE

TOWN OF WAXHAW
LAND DEVELOPMENT STANDARDS

COMMERCIAL TYPE II DRIVEWAY FOR 2'–0" VALLEY GUTTER

STD. NO.	REV.
119.1	

NOTES:

1. WHERE A TYPE III DRIVEWAY IS APPROVED BY THE TOWN DEVELOPMENT SERVICES DEPARTMENT THAT CONNECTS TO AN EXISTING SIGNALIZED INTERSECTION, OR AT A LOCATION WHERE A TRAFFIC SIGNAL INSTALLATION IS PROPOSED BY THE TOWN BASED ON A TRAFFIC IMPACT/SIGNAL WARRANT STUDY, A FULL DEPTH ASPHALT PAVEMENT (2–1/2" S–9.5 B/C AND 6" B–25.0 B/C) IS REQUIRED. THIS PAVEMENT DESIGN IS REQUIRED IN THE DRIVEWAY EASEMENT (100–FOOT MINIMUM) TO MAINTAIN DETECTOR LOOPS AND PAVEMENT MARKINGS. A TRAFFIC SIGNAL WILL BE INSTALLED ONLY IF THE TOWN DETERMINES THAT ONE IS NECESSARY BASED ON A TRAFFIC STUDY OF CURRENT CONDITIONS.
2. A CONCRETE GUTTER IS TO BE USED EXCEPT AT EXISTING OR PROPOSED TRAFFIC SIGNAL LOCATIONS. AT THESE LOCATIONS ADDITIONAL DRAINAGE REQUIREMENTS WILL BE NECESSARY TO ELIMINATE THE NEED FOR GUTTER ACROSS THE DRIVEWAY CONNECTIONS.
3. THE DRIVEWAY MUST RISE 6" FROM THE GUTTER LINE TO PREVENT RUNOFF FROM ENTERING DRIVEWAY.
4. ALL DRIVEWAYS MUST MEET THE CURRENT TOWN DRIVEWAY REGULATIONS AND NCDOT REQUIREMENTS FOR SPACING, SIGHT DISTANCE, AND OFFSETS FROM PROPERTY LINES AND INTERSECTIONS.
5. TWO (2) ACCESSIBLE RAMPS PER CURB RETURN REQUIRED AT SIGNALIZED INTERSECTIONS.

* FOUR (4) FOOT GUTTER AND WINGS WILL NOT BE REQUIRED TO DIRECT WATER ACROSS DRIVE IF THE DRIVEWAY GUTTER SLOPE IS GREATER THAN 2%.

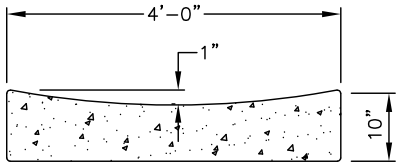

SECTION A–A

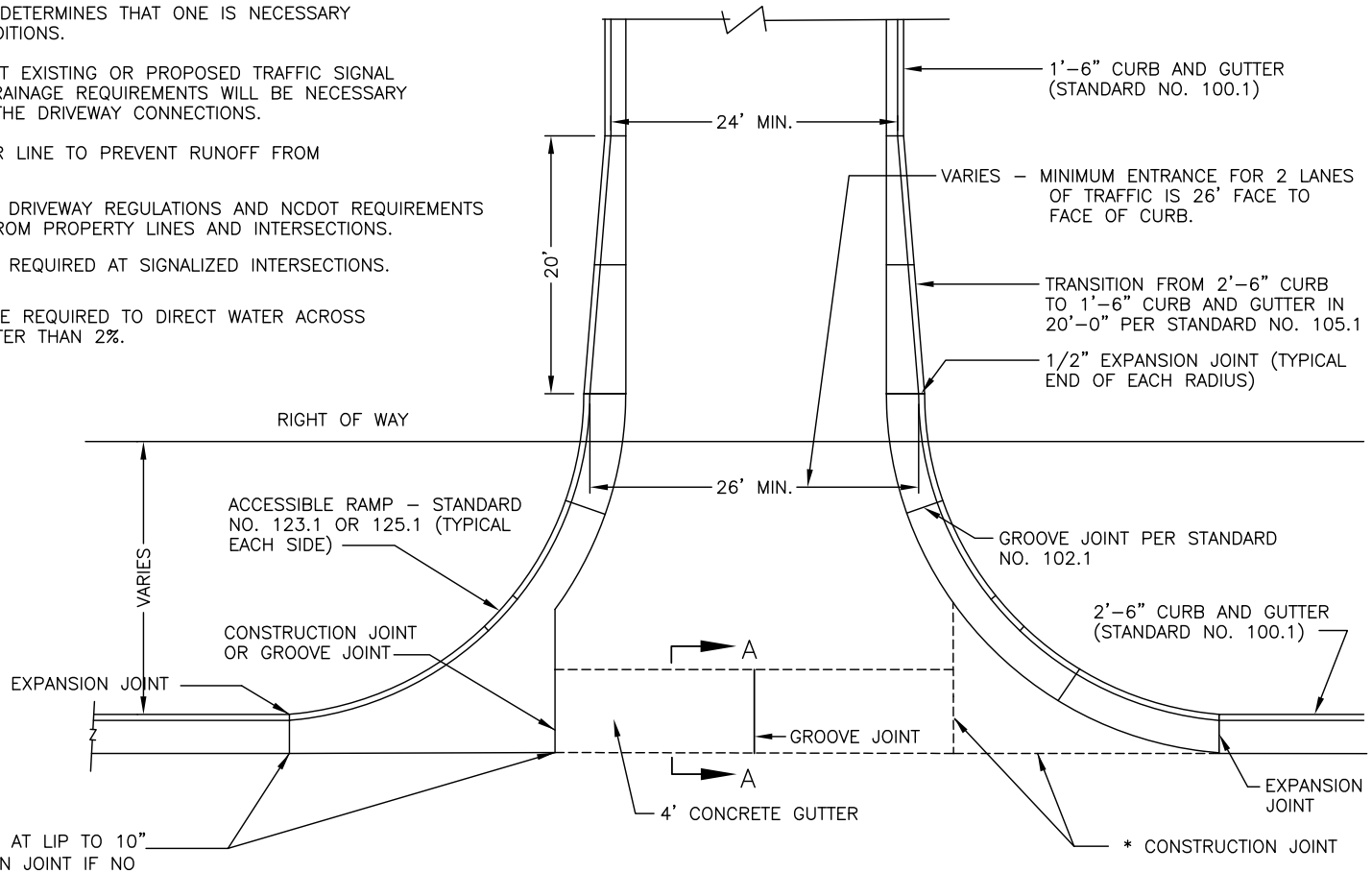

TRANSITION CONCRETE DEPTH FROM 7" AT LIP TO 10" AT 4' CONCRETE GUTTER CONSTRUCTION JOINT IF NO ASPHALT BASE INSTALLED. IF ASPHALT BASE IS USED, 7" CONCRETE DEPTH CAN BE CARRIED THROUGH THE 4' CONCRETE GUTTER.

PLAN

NOT TO SCALE

	TOWN OF WAXHAW LAND DEVELOPMENT STANDARDS	TYPE III DRIVEWAY ENTRANCE	STD. NO. 120.1 / REV.

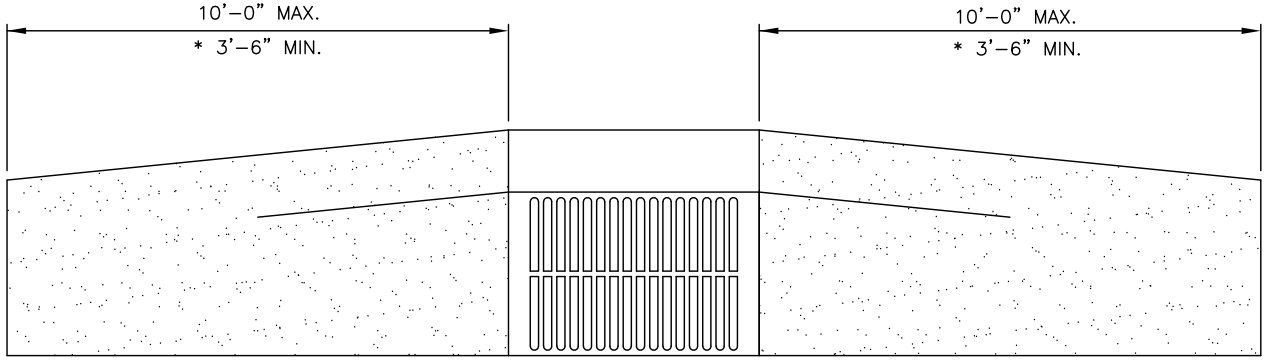

PLAN

NOTE:

* TRANSITION FROM 2'–6" STANDARD CURB TO VALLEY CURB AT A DRAINAGE INLET ONLY.
SEE STANDARD 104.1 FOR CROSS SECTION GEOMETRY.

NOT TO SCALE

	TOWN OF WAXHAW LAND DEVELOPMENT STANDARDS	CATCH BASIN FRAME IN VALLEY GUTTER	STD. NO. 121.1 / REV.

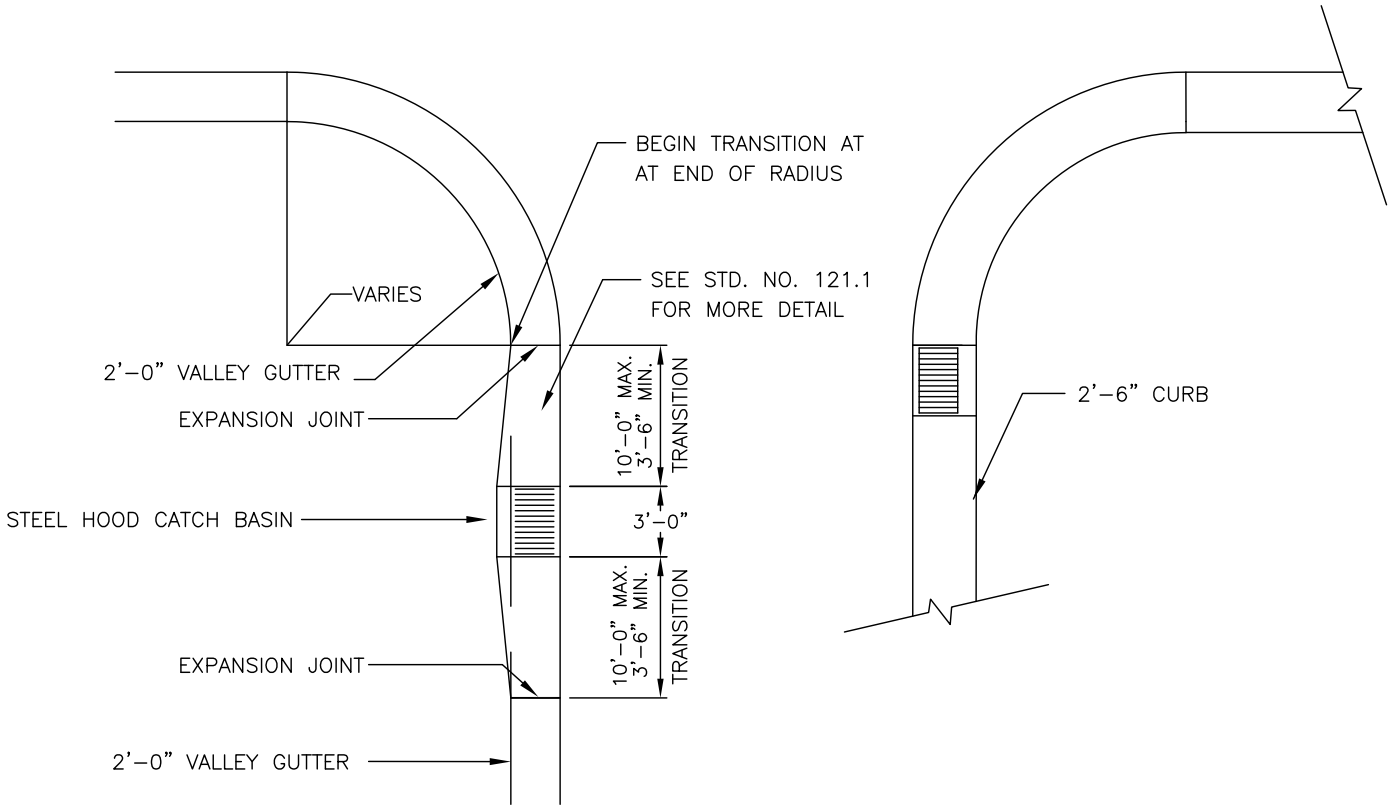

NOTE:

1. WHERE 2'–6" CURB AND GUTTER IS USED, CATCH BASINS MAY BE LOCATED AT END OF RADIUS.
2. RADIUS AT INTERSECTION MAY VARY.

NOT TO SCALE

TOWN OF WAXHAW LAND DEVELOPMENT STANDARDS	CATCH BASIN PLACEMENT AT INTERSECTIONS	STD. NO. 122.1 / REV.

NOTES:

1. IF TURNING SPACE IS CONFINED BY CURB OR VERTICAL SURFACE AT BACK OF THE TURNING SPACE, THE MINIMUM WIDTH MUST INCREASE TO 5'–0" MIN.

2. ENSURE FLUSH CONDITIONS AT CURB RAMP TO GUTTER TRANSITION.

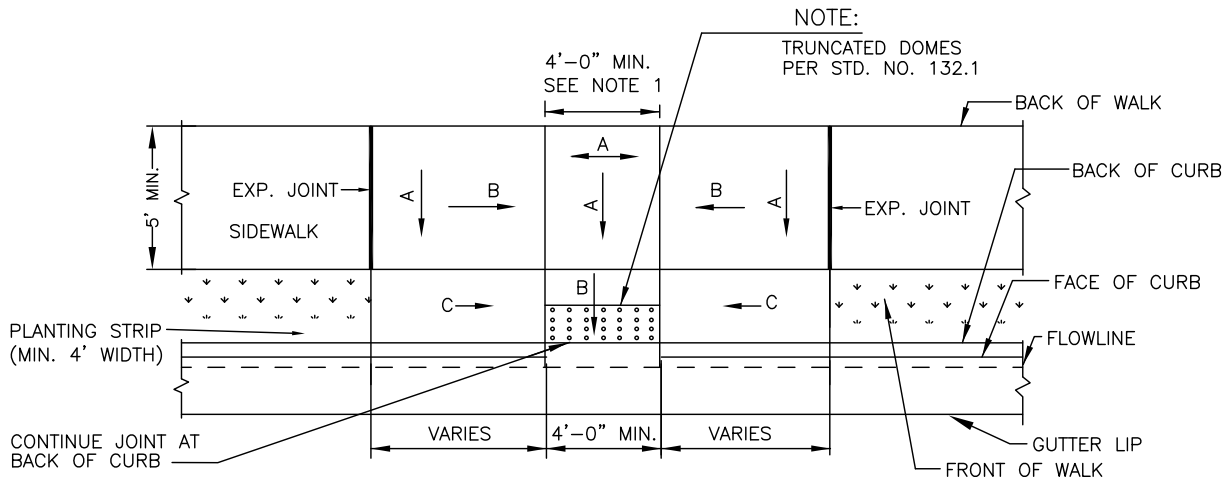

PLAN VIEW–PARALLEL RAMP WITH PLANTING STRIP

SLOPE "A" 1.5% (2.00% MAX)
SLOPE "B" 7.5% (8.33% MAX)
SLOPE "C" 10% MAX

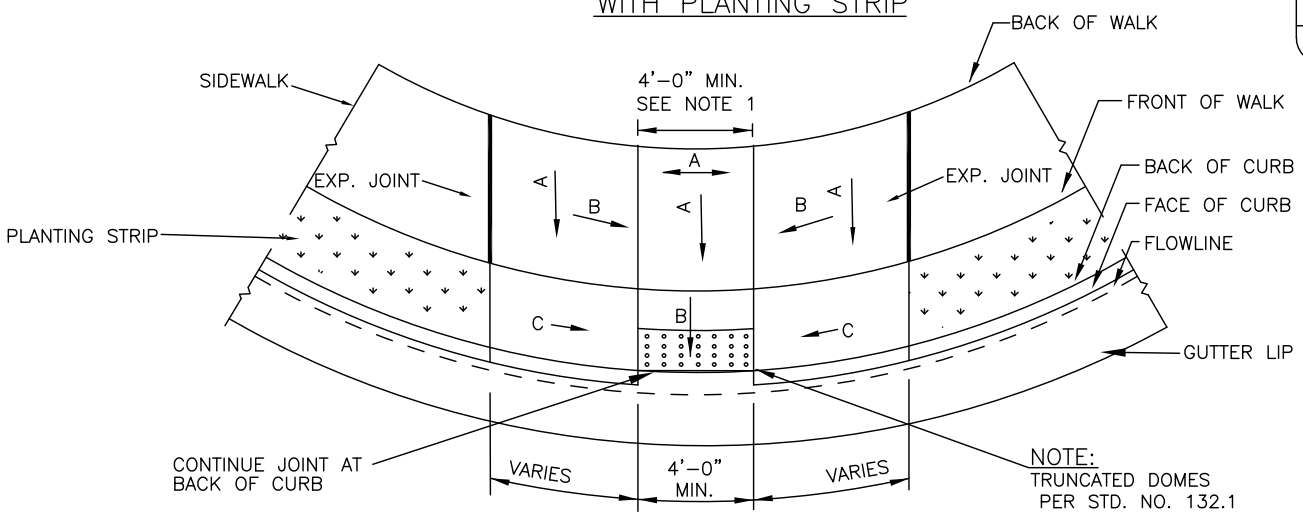

PLAN VIEW–DIAGONAL RAMP WITH PLANTING STRIP

NOT TO SCALE

TOWN OF WAXHAW LAND DEVELOPMENT STANDARDS	ACCESSIBLE RAMP STANDARD WITH PLANTING STRIP 2'–6" CURB AND GUTTER	STD. NO. 123.1	REV. 8/19

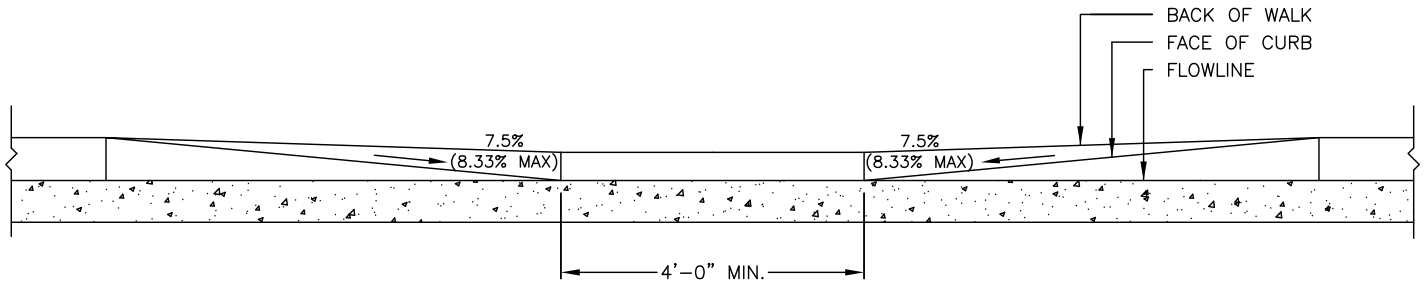

ELEVATION

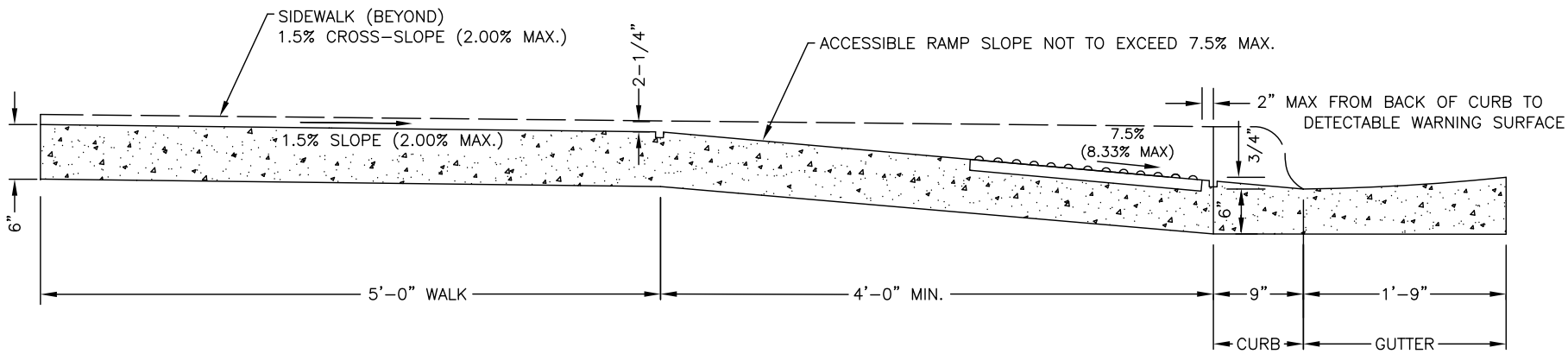

TYPICAL RAMP ℄ SECTION

NOT TO SCALE

	TOWN OF WAXHAW LAND DEVELOPMENT STANDARDS	ACCESSIBLE RAMP SECTIONS WITH PLANTING STRIP 2-6" CURB AND GUTTER	STD. NO. 124.1 / REV.

NOTES:

1. IF TURNING SPACE IS CONFINED BY CURB OR VERTICAL SURFACE AT BACK OF THE TURNING SPACE, THE MINIMUM WIDTH MUST INCREASE TO 5'–0" MIN.

2. ENSURE FLUSH CONDITIONS AT CURB RAMP TO GUTTER TRANSITION.

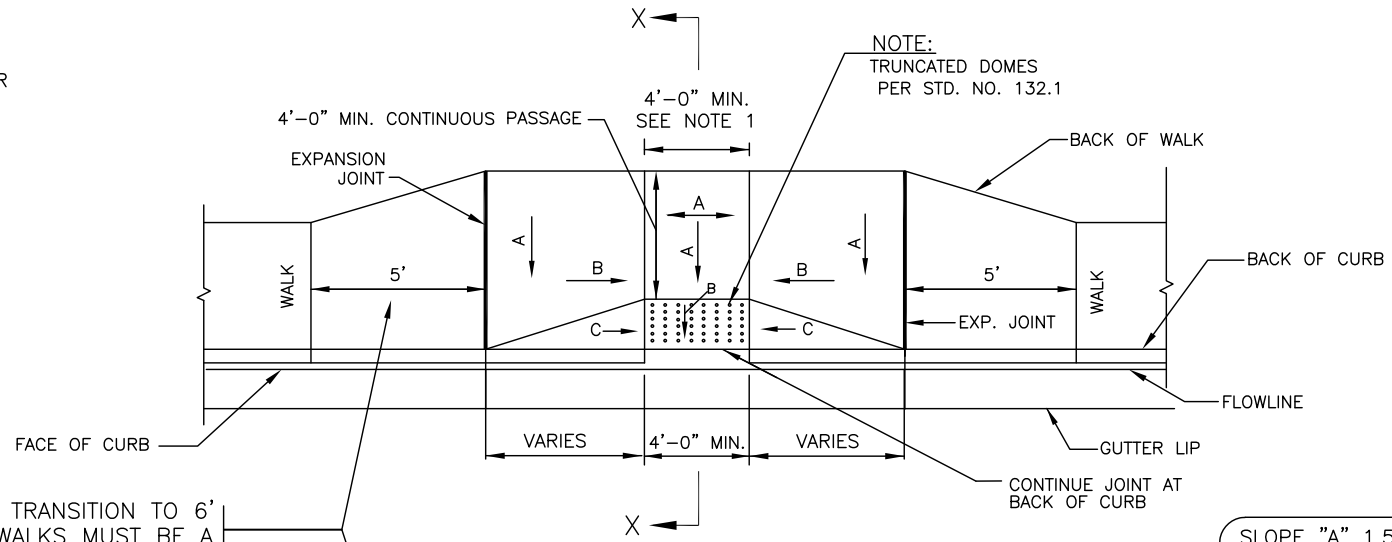

PROVIDE 5' LONG TRANSITION TO 6' WIDE WALK. ALL WALKS MUST BE A MIN. 6' WIDTH AT RAMP.

PLAN VIEW–PARALLEL RAMP WITHOUT PLANTING STRIP

SLOPE "A" 1.5% (2.00% MAX)
SLOPE "B" 7.5% (8.33% MAX)
SLOPE "C" 10% MAX

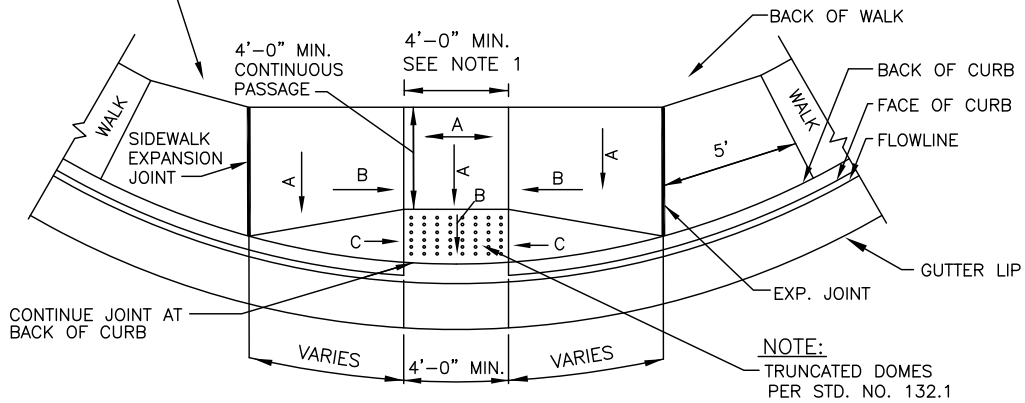

PLAN VIEW–DIAGONAL RAMP WITHOUT PLANTING STRIP

NOT TO SCALE

TOWN OF WAXHAW LAND DEVELOPMENT STANDARDS	ACCESSIBLE RAMP STANDARD WITHOUT PLANTING STRIP 2'–6" CURB AND GUTTER	STD. NO. 125.1 / REV.

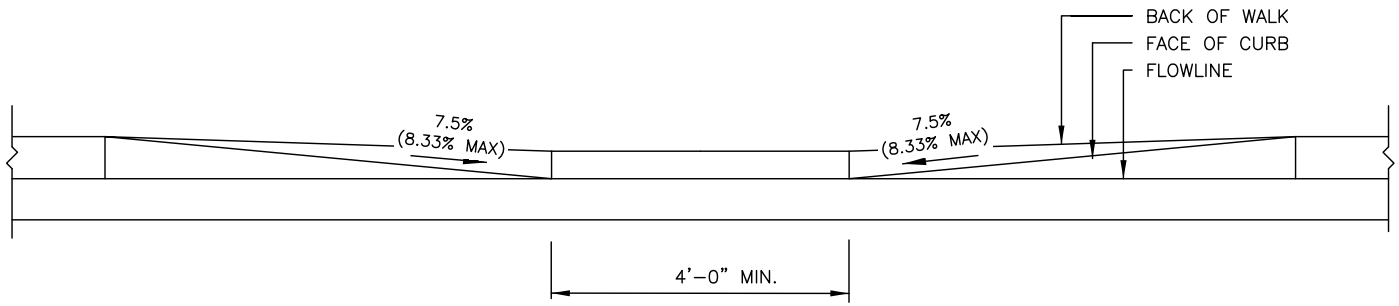

SECTION THROUGH FLOWLINE

NOTE:

ALL WALKS MUST BE A MIN. 6' WIDTH AT RAMPS.

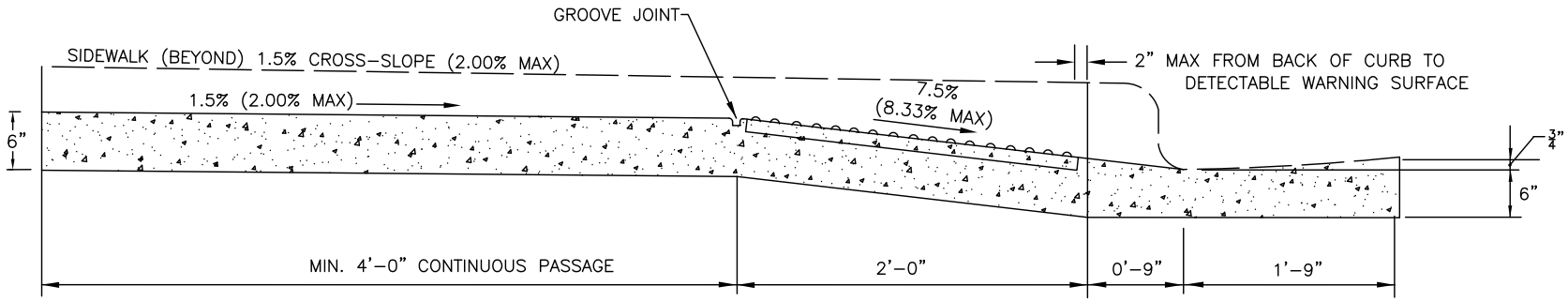

TYPICAL RAMP ℄ SECTION X–X

NOT TO SCALE

TOWN OF WAXHAW LAND DEVELOPMENT STANDARDS	ACCESSIBLE RAMP SECTIONS WITHOUT PLANTING STRIP (2'–6" CURB AND GUTTER)	STD. NO.	REV.
		126.1	8/19

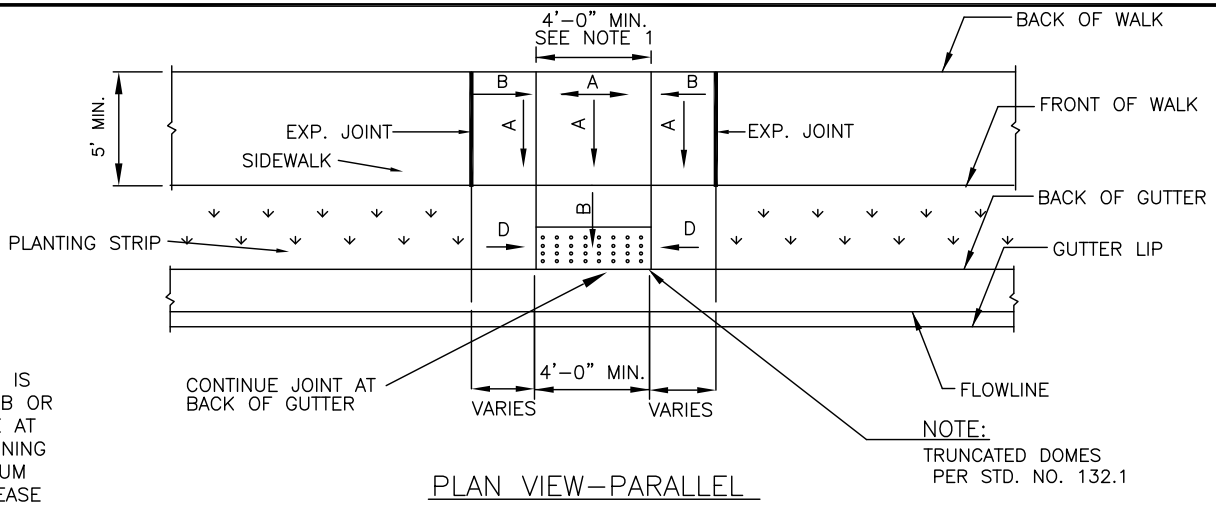

PLAN VIEW–PARALLEL
RAMP WITH PLANTING STRIP

NOTES:

1. IF TURNING SPACE IS CONFINED BY CURB OR VERTICAL SURFACE AT BACK OF THE TURNING SPACE, THE MINIMUM WIDTH MUST INCREASE TO 5'–0" MIN.

2. ENSURE FLUSH CONDITIONS AT CURB RAMP TO GUTTER TRANSITION.

SLOPE "A" 1.5% (2.00% MAX)
SLOPE "B" 7.5% (8.33% MAX)
SLOPE "C" 10% MAX

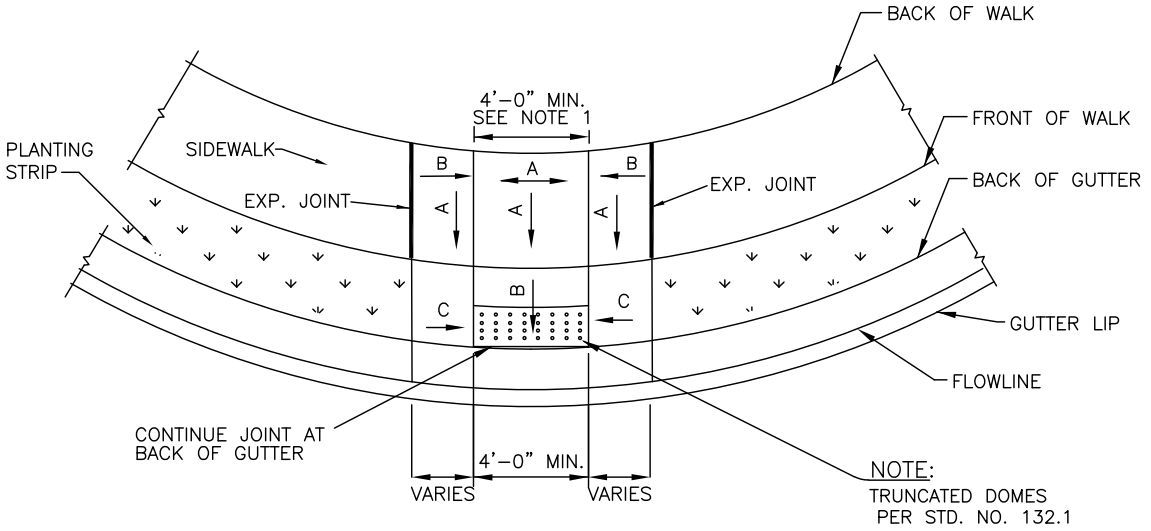

PLAN VIEW–DIAGONAL RAMP
WITH PLANTING STRIP

NOT TO SCALE

TOWN OF WAXHAW LAND DEVELOPMENT STANDARDS	ACCESSIBLE RAMP STANDARD 2'–0" VALLEY GUTTER	STD. NO. 127.1 / REV.

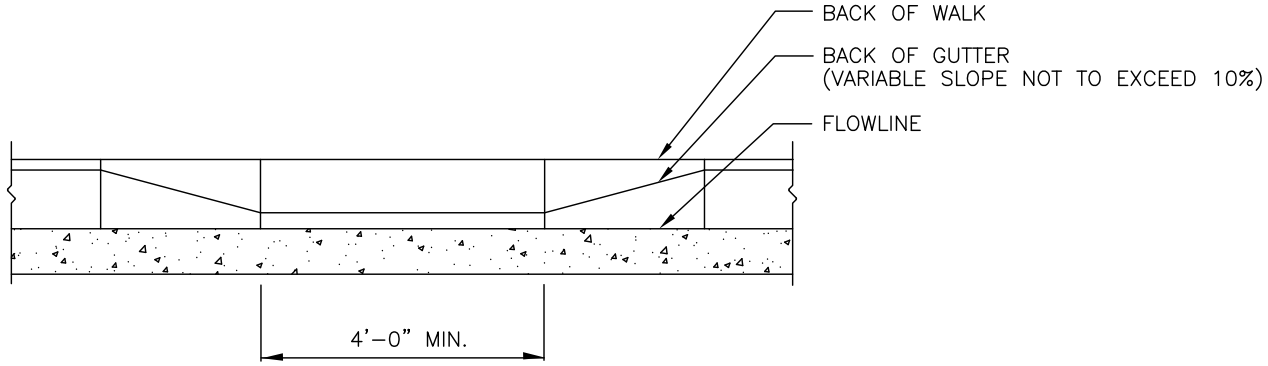

SECTION THROUGH FLOWLINE

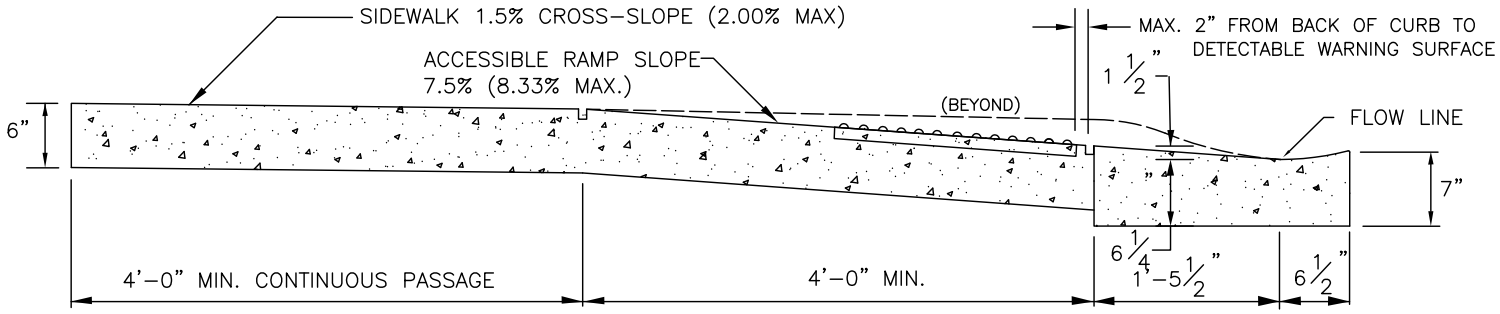

TYPICAL RAMP ℄ SECTION

NOT TO SCALE

	TOWN OF WAXHAW LAND DEVELOPMENT STANDARDS	ACCESSIBLE RAMP SECTIONS 2'–0" VALLEY GUTTER	STD. NO. 128.1 / REV.

NOTES:

1. IF TURNING SPACE IS CONFINED BY CURB OR VERTICAL SURFACE AT BACK OF THE TURNING SPACE, THE MINIMUM WIDTH MUST INCREASE TO 5'–0" MIN.

2. ENSURE FLUSH CONDITIONS AT CURB RAMP TO GUTTER TRANSITION.

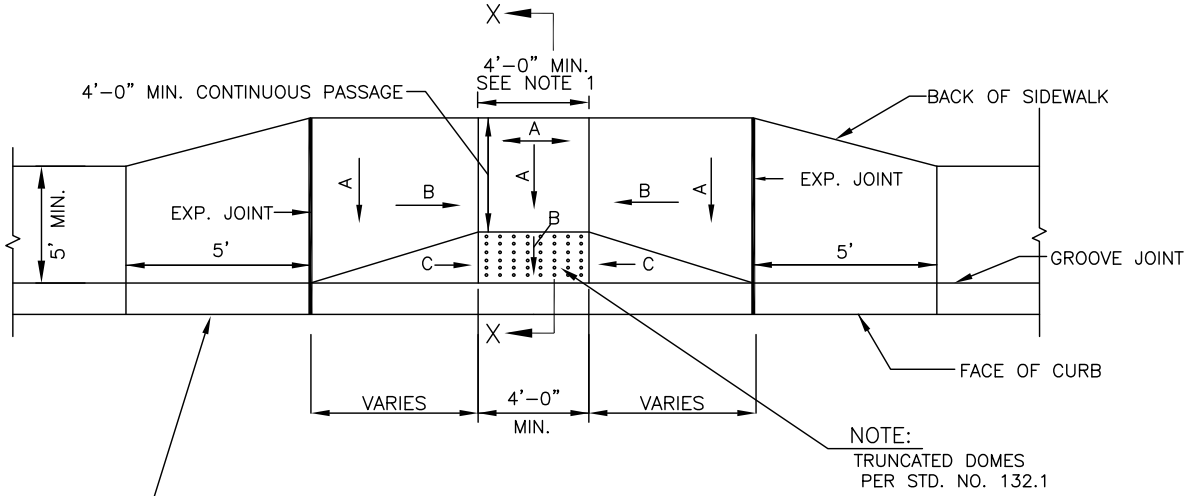

PLAN VIEW–PARALLEL RAMP

PROVIDE 5' LONG TRANSITION TO 6' WIDE WALK. ALL WALKS MUST BE A MIN. 6' WIDTH AT RAMP.

SLOPE "A" 1.5% (2.00% MAX)
SLOPE "B" 7.5% (8.33% MAX)
SLOPE "C" 10% MAX

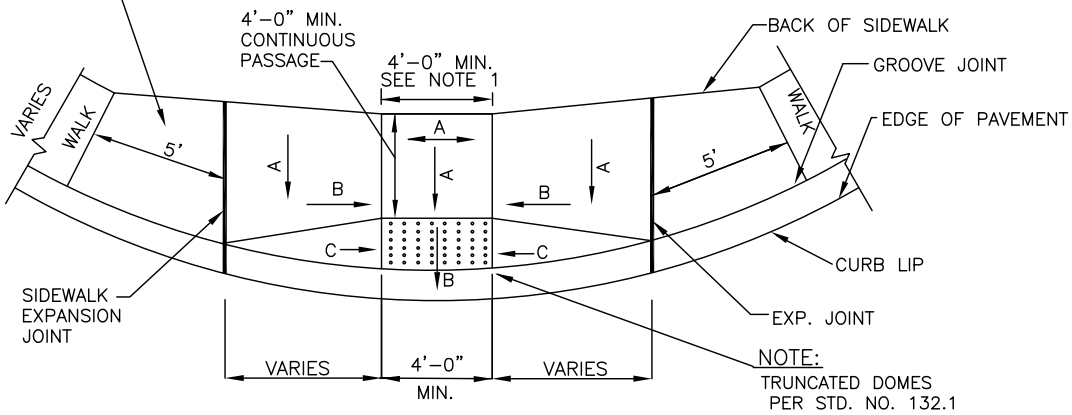

PLAN VIEW–DIAGONAL RAMP

NOT TO SCALE

TOWN OF WAXHAW LAND DEVELOPMENT STANDARDS	ACCESSIBLE RAMP STANDARD MONOLITHIC CURB AND SIDEWALK	STD. NO. 129.1 / REV.

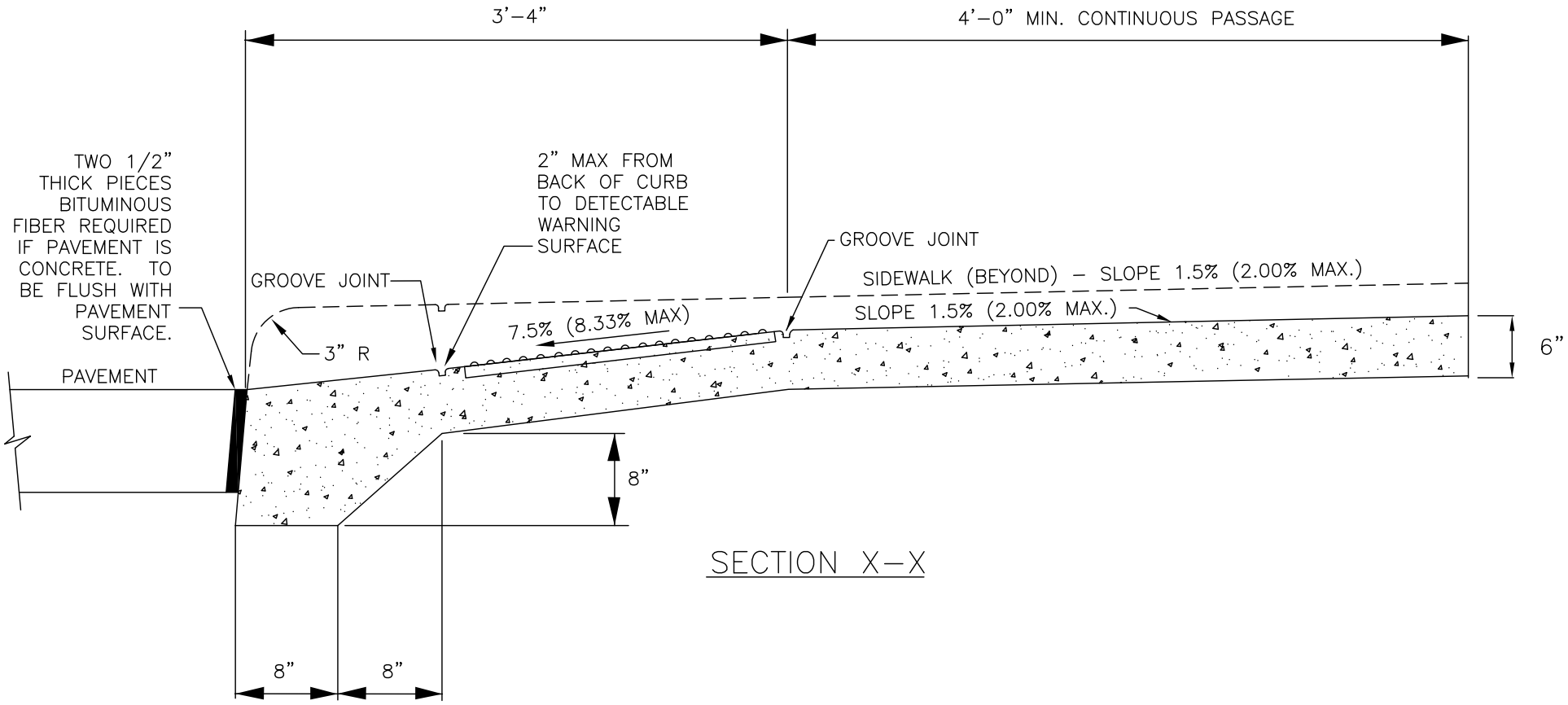

SECTION X–X

NOT TO SCALE

	TOWN OF WAXHAW LAND DEVELOPMENT STANDARDS	ACCESSIBLE RAMP SECTIONS MONOLITHIC CURB AND SIDEWALK	STD. NO. 130.1 / REV.

NOTES:

1. MAINTAIN A MINIMUM OF 0.5% SLOPE ON ALL CONCRETE SURFACES TO PROMOTE SURFACE DRAINAGE TOWARD CURB.
2. GUTTER FLOW LINE AND PLAN PROFILE SHALL BE MAINTAINED THROUGH THE RAMP AREA. MAX GUTTER SLOPE IS 2%.
3. THE SURFACE OF THE RAMP SHALL BE FLUSH WITH THE FLOWLINE OF THE CURB AND GUTTER.
4. THE RAMP OPENING (AT THE FULLY DEPRESSED CURB) SHALL BE LOCATED WITHIN THE PARALLEL BOUNDARIES OF THE CROSSWALK MARKINGS. THE RAMP CENTERLINE SHALL BE LOCATED AT THE CORNER RADIUS CENTERLINE UNLESS OTHERWISE DIRECTED BY THE ENGINEER. DIAGONAL CURB RAMPS SHALL HAVE A SEGMENT OF STRAIGHT CURB AT LEAST 24 INCHES LONG LOCATED ON EACH SIDE OF THE WING SLOPE AND WITHIN THE CROSSWALK MARKINGS.
5. THE WING AND RAMP SURFACES SHALL BE 3600 PSI CONCRETE WITH A SIDEWALK FINISH IN ACCORDANCE WITH CURRENT EDITION NCDOT STANDARD SPECIFICATIONS FOR ROADS AND STRUCTURES.
6. DRAINAGE STRUCTURES, MAST ARMS, LIGHT POLES AND OTHER OBSTRUCTIONS SHALL NOT BE PLACED IN LINE WITH RAMPS. LOCATION OF THE RAMP SHALL TAKE PRECEDENCE OVER LOCATION OF OBSTRUCTIONS EXCEPT WHERE EXISTING OBSTRUCTIONS ARE BEING UTILIZED IN THE NEW CONSTRUCTION.
7. SEE STANDARD DRAWING 132.1 FOR DETECTABLE WARNING INSTALLATION.

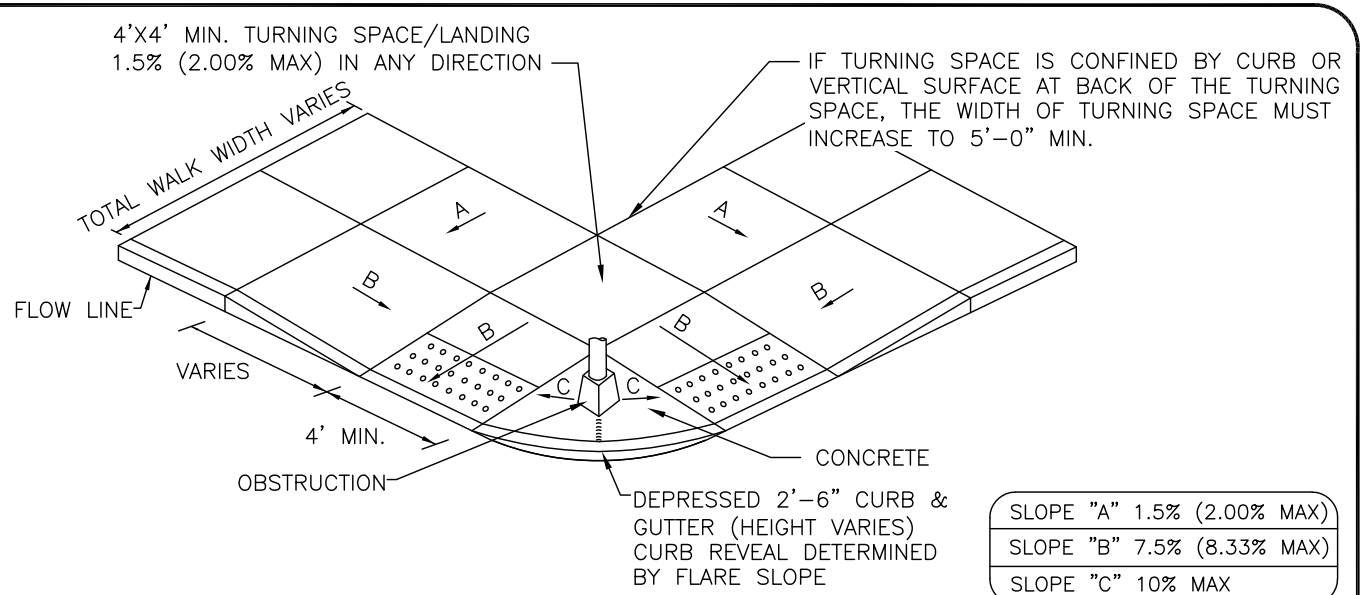

SLOPE "A" 1.5% (2.00% MAX)
SLOPE "B" 7.5% (8.33% MAX)
SLOPE "C" 10% MAX

PLACEMENT FOR OBSTRUCTED CORNER RADIUS

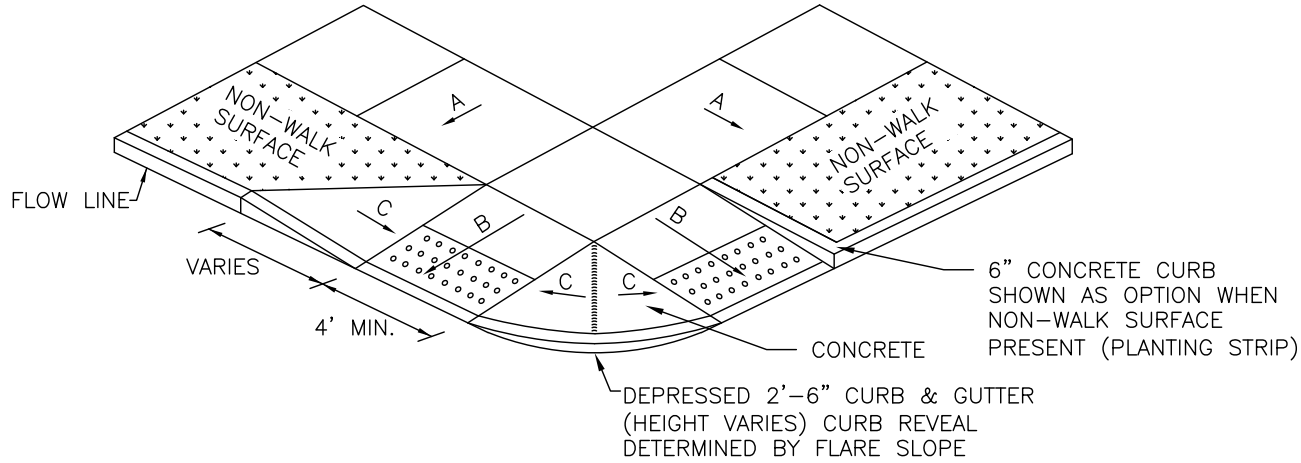

PLACEMENT FOR SMALL CORNER RADIUS

NOT TO SCALE

	TOWN OF WAXHAW LAND DEVELOPMENT STANDARDS	STANDARD PLACEMENT OF ACCESSIBLE RAMP AND GENERAL NOTES	STD. NO. 131.1 / REV.

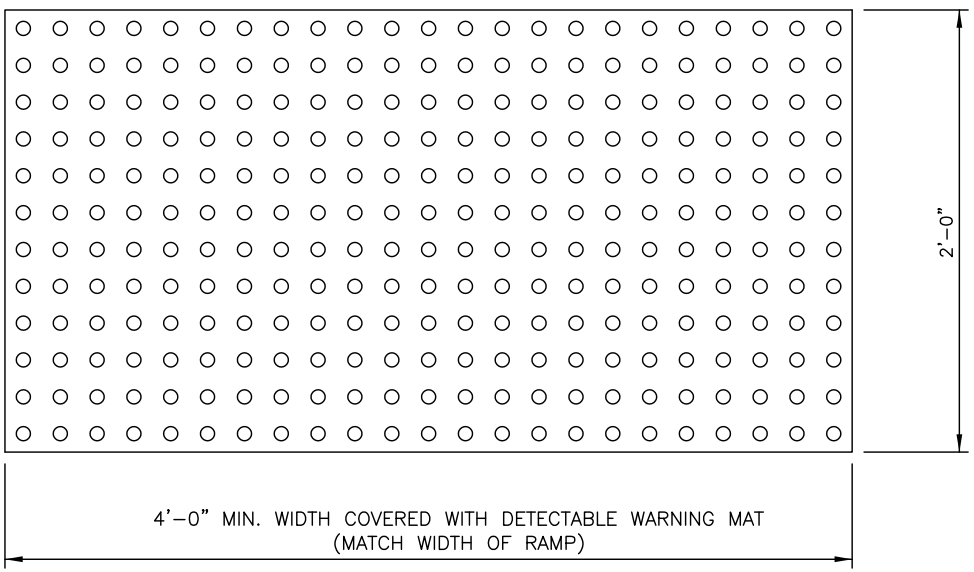

TRUNCATED DOME PLAN VIEW

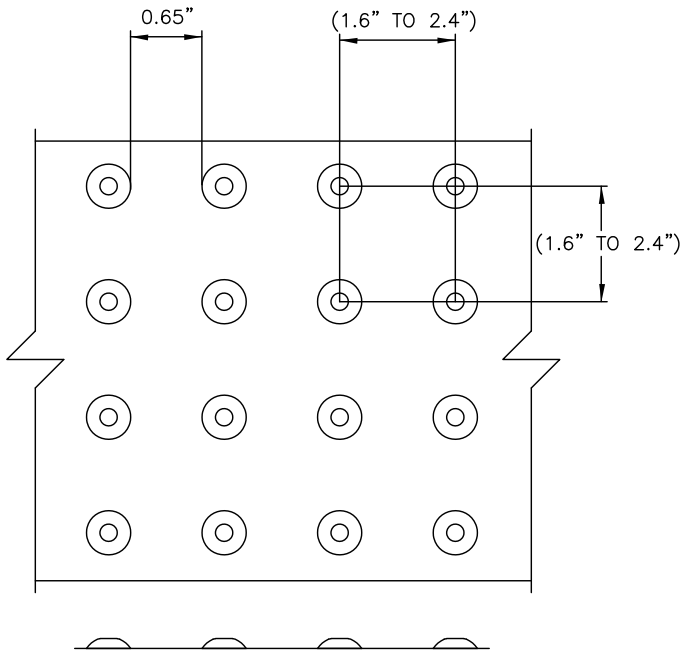

TRUNCATED DOME SPACING

NOTES:

1. ALL DETECTABLE WARNING DEVICES USED IN NEW CONSTRUCTION SHALL BE OF A RIDGID PRECAST OR EMBEDDED PRODUCT APPROVED BY THE TOWN ENGINEER. RETRO FIT MATS WILL ONLY BE ALLOWED ON EXISTING RAMPS WITH PRIOR APPROVAL OF THE TOWN ENGINEER FOR MATERIAL TYPE AND INSTALLATION (IE. RESURFACING).
2. RAMP AND DETECTABLE WARNING AREA SHALL BE A MINIMUM OF 4 FEET IN WIDTH, BUT NOT BE LESS THAN THE WIDTH OF SIDEWALK LEADING TO BACK OF RAMP.
3. DETECTABLE WARNING SURFACES SHALL EXTEND 2.0 FT MINIMUM IN THE DIRECTION OF PEDESTRIAN TRAVEL.
4. DETECTABLE WARNING AREA CAN BE SQUARE WHERE USED IN A CURB RADIUS.
5. THE ROWS OF TRUNCATED DOMES IN DETECTABLE WARNING SURFACES SHOULD BE ALIGNED PERPENDICULAR TO THE GRADE BREAK BETWEEN THE RAMP RUN AND THE STREET. WHERE DETECTABLE WARNING SURFACES ARE PROVIDED ON A SURFACE WITH A SLOPE THAT IS LESS THAN 5 PERCENT, DOME ORIENTATION IS LESS CRITICAL.
6. DECTECTABLE WARNING AREA SHALL BE COLORED BLACK IN ALL LOCATIONS.
7. IF PAVERS ARE TO BE USED, PAVERS SHALL BE 6" THICK AND CAST FROM 5000 psi CONCRETE.
8. MATS ARE TO BE RIGID WITH TURN DOWN EDGES EMBEDDED IN CONCRETE TO ELIMINATE TRIP HAZARD.
9. DIMENSIONS PER NCDOT 848.06

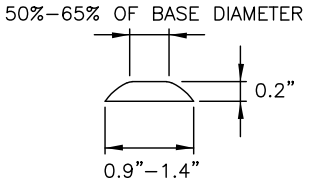

TRUNCATED DOME SECTION

NOT TO SCALE

TOWN OF WAXHAW LAND DEVELOPMENT STANDARDS	TRUNCATED DOMES PLAN AND CROSS-SECTION	STD. NO.	REV.
		132.1	8/19

(H) 2'–6" CURB AND GUTTER, STD. 100.1

(M) SAFETY RAIL, STD. 700.1 & 701.1

(S) 5'–0" SIDEWALK, STD. 106.1

(H1) 2'–0" VALLEY GUTTER. STD. 101.1

(H2) CURB TRANSITION 2'–6" CURB AND GUTTER TO 2'–0" VALLEY GUTTER, STD. 104.1

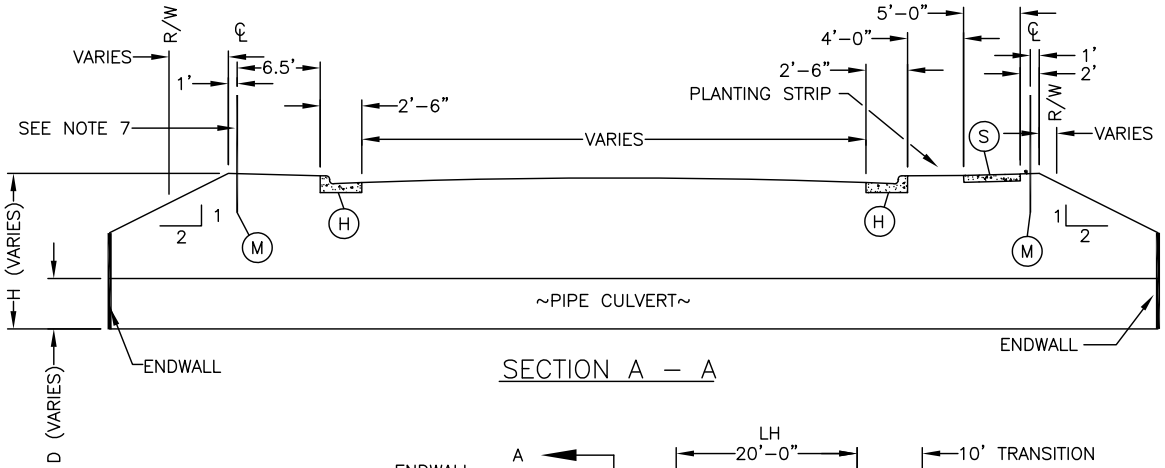

SECTION A – A

LH = DISTANCE FROM END OF WINGWALL TO END OF SAFETY RAIL.

LC1 = DISTANCE FROM ℄ OF CULVERT TO END OF 2'–6" CURB AND GUTTER GUTTER.

LC2 = DISTANCE FROM END OF WINGWALL TO END OF 2'–6" CURB AND GUTTER.

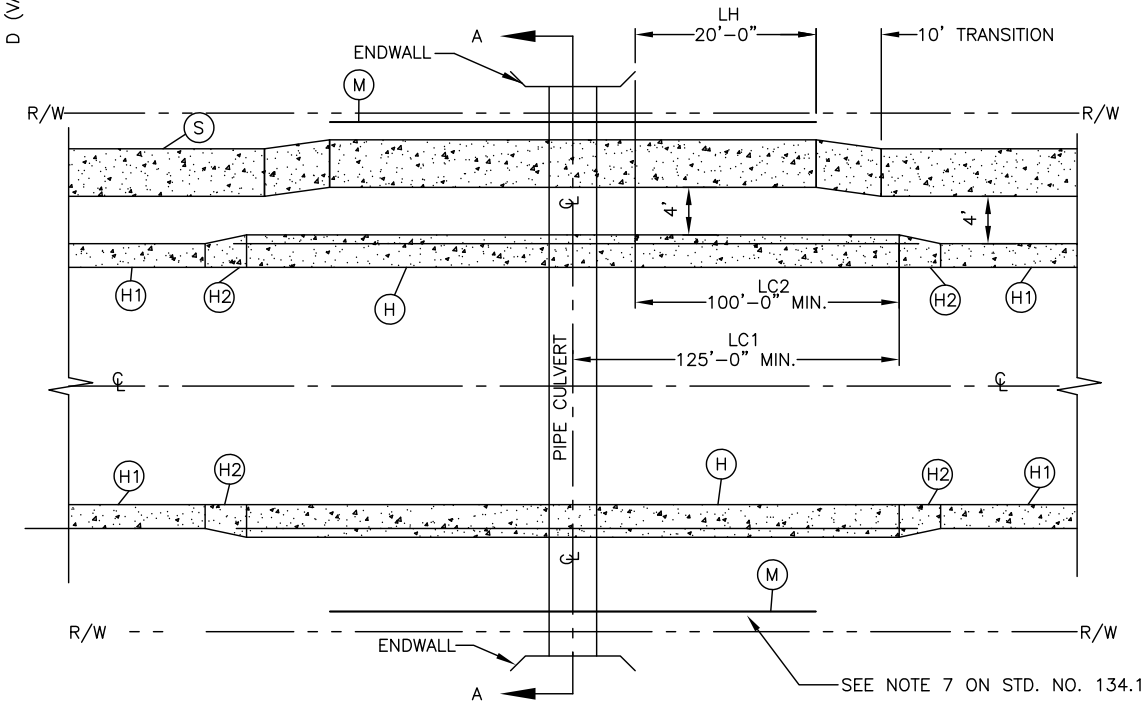

NOTES:

1. SEE STD. NO. 134.1 FOR GENERAL NOTES AND CLEAR ZONE DISTANCES

NOT TO SCALE

TOWN OF WAXHAW LAND DEVELOPMENT STANDARDS	CULVERT CROSSINGS ON RESIDENTIAL AND COMMERCIAL STREETS	STD. NO.	REV.
		133.1	8/19

GENERAL NOTES:

1. UNLESS OTHERWISE DETERMINED BY THE TOWN ENGINEER, THE MEASURES ILLUSTRATED SHALL BE USED WHEN CULVERT DIAMETER, D, IS GREATER THAN OR EQUAL TO 24 INCHES AND WHEN THE DIFFERENCE IN ELEVATION BETWEEN THE CULVERT INVERT AND THE TOP OF SLOPE, H, IS GREATER THAN OR EQUAL TO 5 FEET.
2. INSTALLATION OF 2'–6" CURB AND GUTTER MAY NOT BE REQUIRED WHEN AN ADEQUATE CLEAR ZONE IS PROVIDED FOR VEHICLES WITH A MAXIMUM OF 6:1 SLOPE (SEE TABLE 1).
3. INSTALLATION OF SAFETY RAIL MAY NOT BE REQUIRED WHEN A 10–FOOT PEDESTRIAN CLEAR ZONE IS PROVIDED BEHIND THE SIDEWALK WITH A MAXIMUM OF 6:1 SLOPE. WHERE NO SIDEWALK IS REQUIRED, INSTALLATION OF SAFETY RAIL MAY NOT BE REQUIRED WHEN A 15–FOOT PEDESTRIAN CLEAR ZONE IS PROVIDED BEHIND THE CURB WITH A MAXIMUM OF 6:1 SLOPE.
4. FOR CULVERT CROSSINGS WITHOUT ENDWALLS, LH AND LC2 SHALL BE MEASURED FROM THE OUTSIDE OF THE NEAREST WALL OF THE CULVERT BARREL.
5. FOR MULITIPLE BARREL CULVERT CROSSINGS, LC1 SHALL BE MEASURED FROM THE CENTERLINES OF THE OUTBOARD CULVERT BARRELS.
6. WHEN NECESSARY, AS DETERMINED BY THE TOWN ENGINEER, ADDITIONAL MEASURES MAY BE REQUIRED.
7. INSTALLATION OF SAFETY RAIL IS REQUIRED ON BOTH SIDES OF STREET IF SIDEWALK IS REQUIRED ON BOTH SIDES.
8. INSTALLATION OF SAFETY RAIL IS REQUIRED ON BOTH SIDES OF STREET IF NO SIDEWALK IS REQUIRED EXCEPT WHEN A 15–FOOT PEDESTRIAN CLEAR ZONE IS PROVIDED BEHIND THE CURB WITH A MAXIMUM OF 6:1 SLOPE.
9. INSTALLATION OF SAFETY RAIL IS REQUIRED ON THE SIDEWALK SIDE OF STREET IF SIDEWALK IS ONLY REQUIRED ON ONE SIDE OF STREET. INSTALL EITHER SAFTEY RAIL OR 15–FT CLEAR ZONE ON SIDE WITHOUT SIDEWALK.
10. DESIGN ADT IS CALCULATED ASSUMING A TRIP GENERATION OF 10 DAILY TRIPS PER SINGLE FAMILY DWELLING UNIT.

TABLE 1.
CLEAR ZONE DISTANCES
LOCAL, COLLECTOR, AND COMMERCIAL STREETS

DESIGN ADT	CLEAR ZONE FROM EDGE OF PAVEMENT	
	TANGENT SECTION	CURVE (WITHIN 125' OF CULVERT)
UNDER 750	10'	15'
750 – 1500	12'	18'
1501 – 6000	14'	21'
OVER 6000	16'	24'

SEE STD. NO. 133.1 FOR PLAN AND CROSS SECTIONAL SCHEMATICS.

NOT TO SCALE

TOWN OF WAXHAW
LAND DEVELOPMENT STANDARDS

CULVERT CROSSINGS ON RESIDENTIAL AND COMMERCIAL STREETS

STD. NO.	REV.
134.1	

GENERAL NOTES:

1. ALL TAPERS ARE 20:1 AND OCCUR ON BOTH SIDES OF THE ROAD TO BE TAPERED STARTING AT THE RADIUS RETURN AFTER THE INTERSECTION.
2. CENTERLINE OF LOCAL RESIDENTIAL IS MAINTAINED. NO SHIFTING OF THE CENTERLINE SHALL OCCUR.
3. RIGHT OF WAY AND SIDEWALK BEHIND TAPERED STREET SECTION TO TAPER OVER THE SAME STREET TAPER LENGTH.
4. DETAIL ALSO APPLIES FOR TRANSITIONS FROM RESIDENTIAL COLLECTOR STREETS TO RESIDENTIAL LOCAL STREETS.

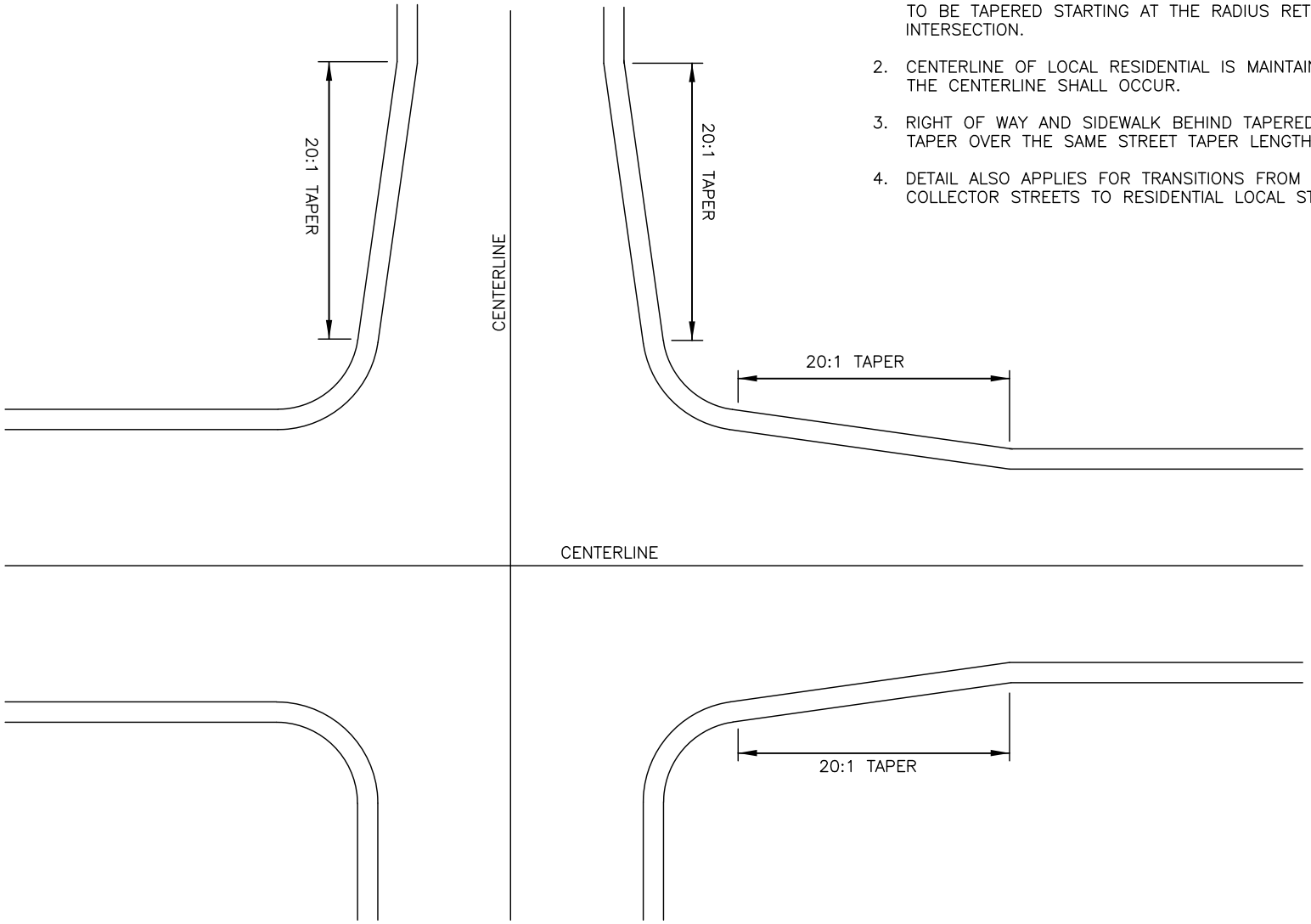

NOT TO SCALE

TOWN OF WAXHAW LAND DEVELOPMENT STANDARDS	TYPICAL LOCAL RESIDENTIAL TO LOCAL LIMITED RESIDENTIAL STREET TAPER	STD. NO. 135.1	REV.

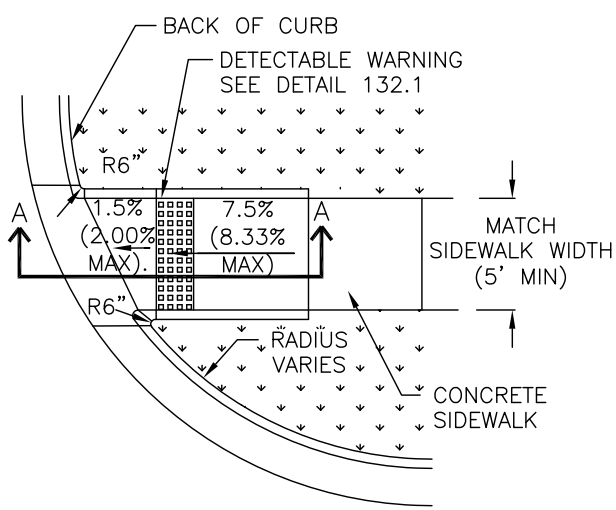

PLAN

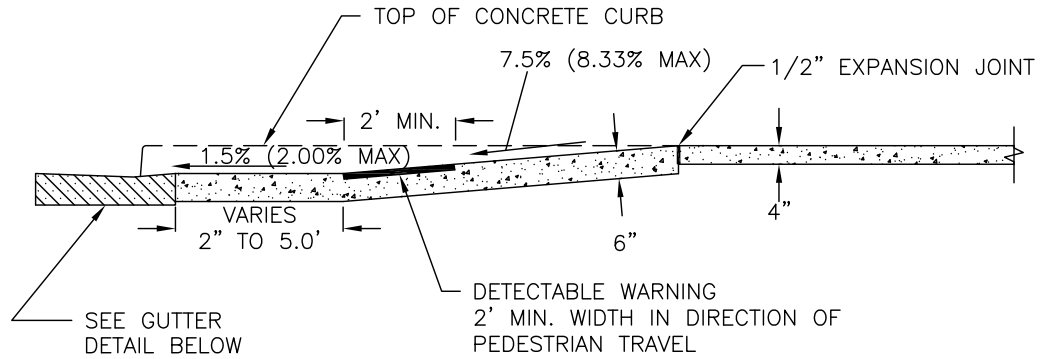

SECTION A–A

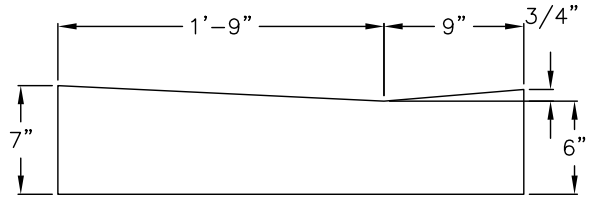

GUTTER DETAIL

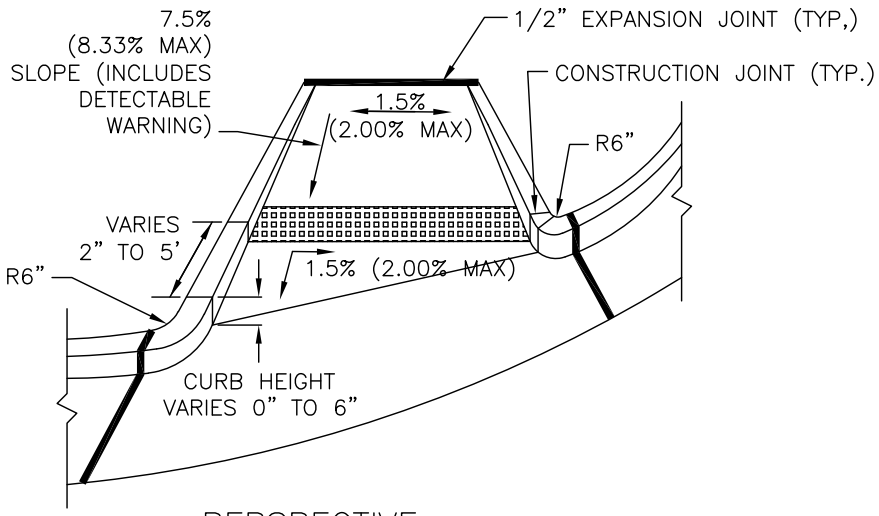

PERSPECTIVE

NOTES:

1. USE THIS DETAIL ONLY UNDER THE FOLLOWING CIRCUMSTANCES:
   - 5–FOOT SIDEWALKS WITH CURB RADII OF 35 FEET OR LESS
   - 6–FOOT SIDEWALKS WITH CURB RADII OF 30 FEET OR LESS
   - 8–FOOT SIDEWALKS WITH CURB RADII OF 25 FEET OR LESS
2. DIRECTIONAL RAMPS MAY BE USED WHEN AN 8–FOOT PLANTING STRIP IS PROVIDED. DO NOT USE THIS DETAIL IF THERE IS HARDSCAPE INSTEAD OF A PLANTING STRIP.
3. ALL CONCRETE SHALL BE AT LEAST 3600 PSI.

THIS DETAIL IS NOT FOR USE ON NCDOT–MAINTAINED STREETS.

NOT TO SCALE

	TOWN OF WAXHAW LAND DEVELOPMENT STANDARDS	DIRECTIONAL ACCESSIBLE RAMP WITH SMALL/MEDIUM CURB RADII	STD. NO. 136.1 / REV.

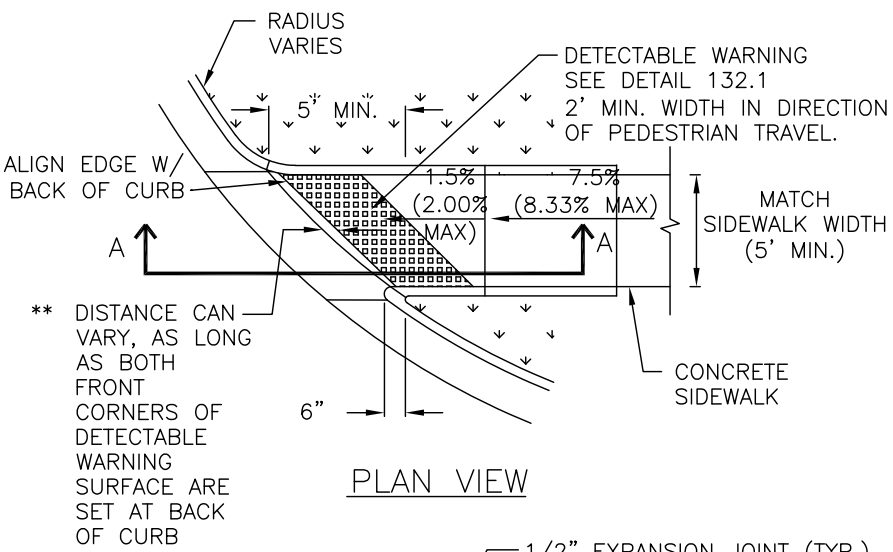

PLAN VIEW

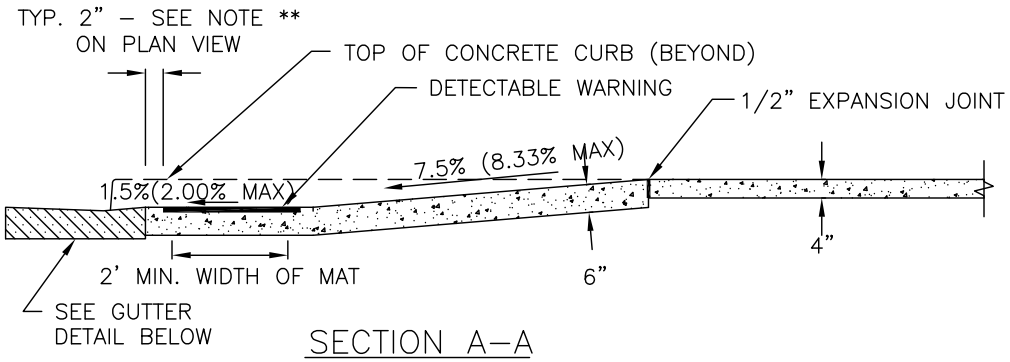

SECTION A–A

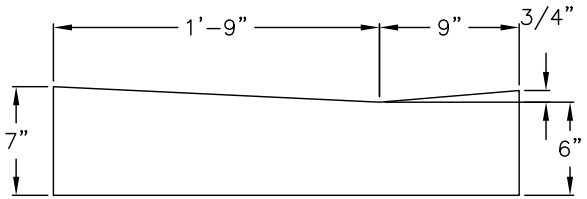

GUTTER DETAIL

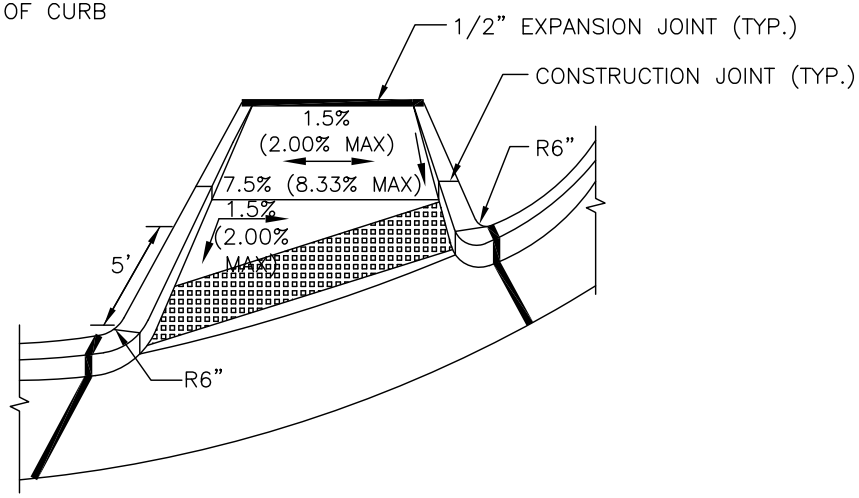

PERSPECTIVE

NOTES:

1. USE THIS DETAIL ONLY UNDER THE FOLLOWING CIRCUMSTANCES:
   - 5–FOOT SIDEWALKS WITH CURB RADII GREATER THAN 35 FEET
   - 6–FOOT SIDEWALKS WITH CURB RADII GREATER THAN 30 FEET
   - 8–FOOT SIDEWALKS WITH CURB RADII GREATER THAN 25 FEET
2. DIRECTIONAL RAMPS MAY BE USED WHEN A MIN. 8–FOOT PLANTING STRIP IS PROVIDED. DO NOT USE THIS DETAIL IF THERE IS HARDSCAPE INSTEAD OF A PLANTING STRIP.
3. ALL CONCRETE SHALL BE AT LEAST 3600 PSI.

THIS DETAIL IS NOT FOR USE ON NCDOT–MAINTAINED STREETS.

NOT TO SCALE

	TOWN OF WAXHAW LAND DEVELOPMENT STANDARDS	DIRECTIONAL ACCESSIBLE RAMP WITH LARGE CURB RADIUS	STD. NO. 137.1 / REV.

A. THIS DETAIL IS A REFERENCE FOR UTILITY PLACEMENT ONLY, REFER TO RESIDENTIAL STREET TYPICAL DETAILS 200.1-210.4 FOR RIGHT OF WAY AND PAVEMENT SECTION INFORMATION BASED ON TYPE OF STREET BEING CONSTRUCTED.

B. STREET LIGHTS AND TREES SHOWN ON OPPOSITE SIDE OF STREET FOR ILLUSTRATIVE PURPOSES ONLY. REFER TO SITE PLAN FOR ACTUAL LOCATIONS.

C. REFER TO SECTION "H" OF DESIGN CRITERIA FOR PLACEMENT OF CLUSTER MAILBOX UNITS, AS WELL AS DETAILS 720.1-723.1.

1. GAS MAIN SHALL BE ON OPPOSITE SIDE OF STREET FROM WATER MAIN.
2. STREET TREES SHALL BE SMALL MATURING SPECIES 2" CALIPER
3. LIGHT POLES AND STREET TREES SHALL MAINTAIN A MINIMUM OFFSET DISTANCE OF 5' FROM WATER AND SEWER SERVICE LINES.
4. CABLE AND TELEPHONE PEDESTALS SHALL BE LOCATED WITHIN THE UTILITY EASEMENT, ALONG THE SIDE LOT LINES.

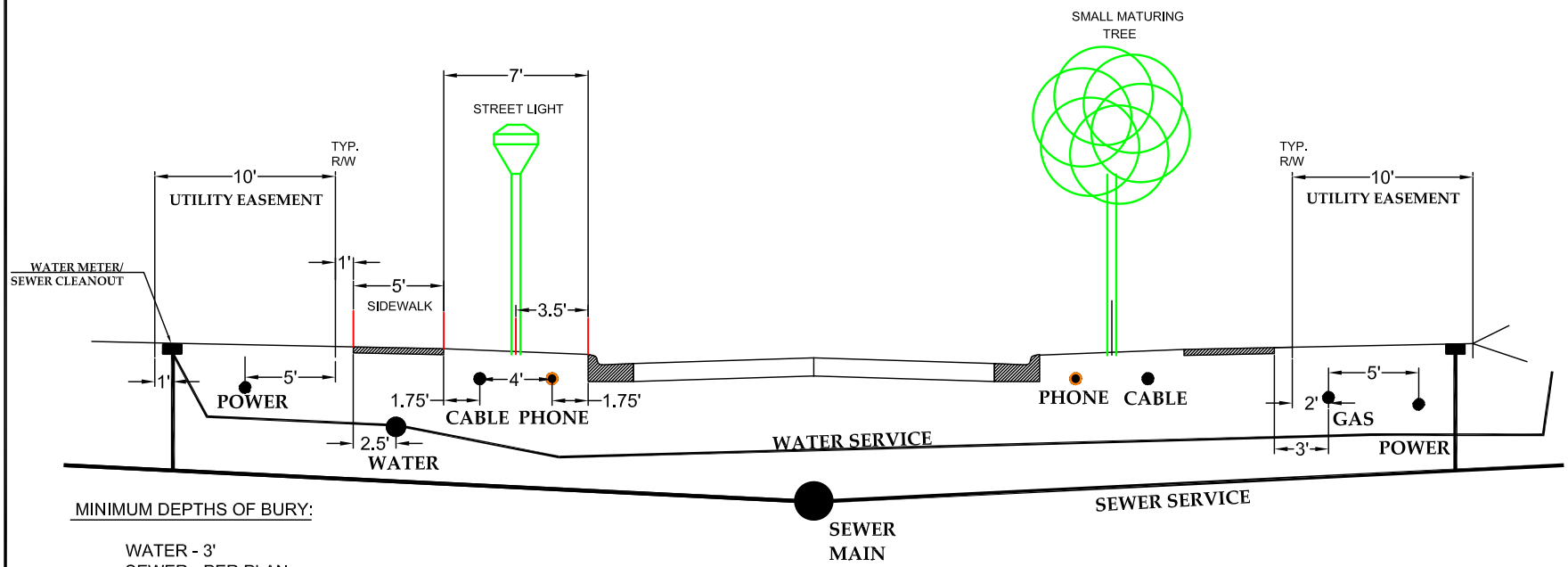

MINIMUM DEPTHS OF BURY:

WATER - 3'
SEWER - PER PLAN
GAS - 2.5'
POWER - 3'
CABLE - 1.5'
PHONE - 1.5'

NOT TO SCALE

	TOWN OF WAXHAW LAND DEVELOPMENT STANDARDS	RESIDENTIAL SUBDIVISION UTILITY LAYOUT TYPICAL SECTION	REV. DATE STD. NO. 200.0

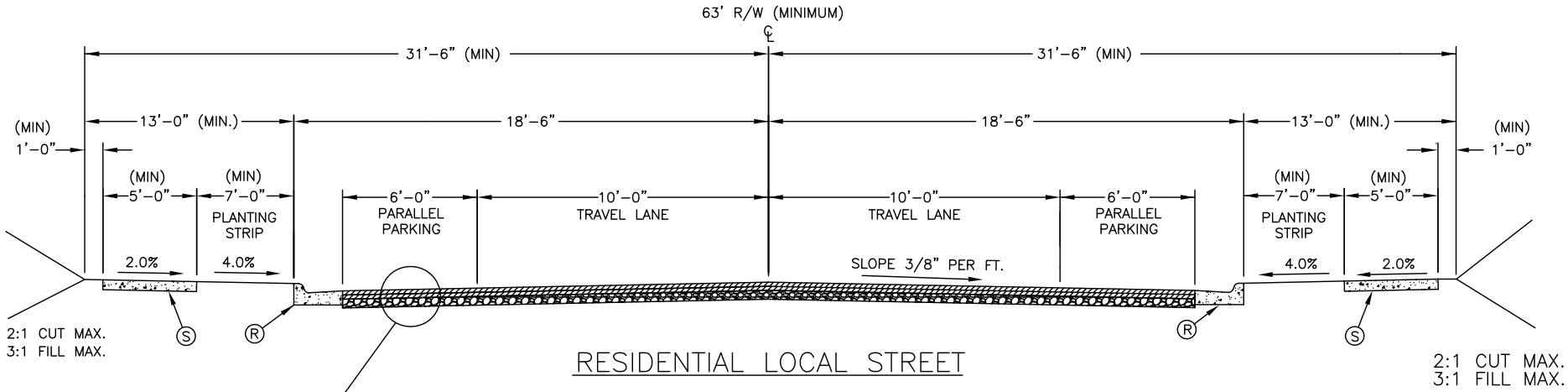

RESIDENTIAL LOCAL STREET

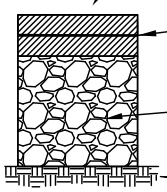

TYPICAL PAVEMENT SECTION

NOTES:

1. SIDEWALK SHALL BE PROVIDED ON BOTH SIDES OF THE STREET.

2. SEE SECTION II. B. FOR ADDITIONAL DESIGN CRITERIA.

3. REFER TO STANDARD DRAWING 710.1 & 711.1 FOR PARALLEL PARKING LAYOUT.

4. THIS IS THE TYPICAL RESIDENTIAL CROSS SECTION. THE APPROVED PLANS MAY INCLUDE ALTERNATIVE SECTIONS THAT ARE CONSISTENT WITH THE TOWN OF WAXHAW TRAFFIC CALMING POLICY.

KEY

(R) 2'-6" STD. CURB AND GUTTER

(S) 4" CONCRETE SIDEWALK

NOT TO SCALE

	TOWN OF WAXHAW LAND DEVELOPMENT STANDARDS	RESIDENTIAL LOCAL STREET PARKING ON BOTH SIDES OF STREET TYPICAL SECTION	REV. DATE 8/19 STD. NO. 200.1

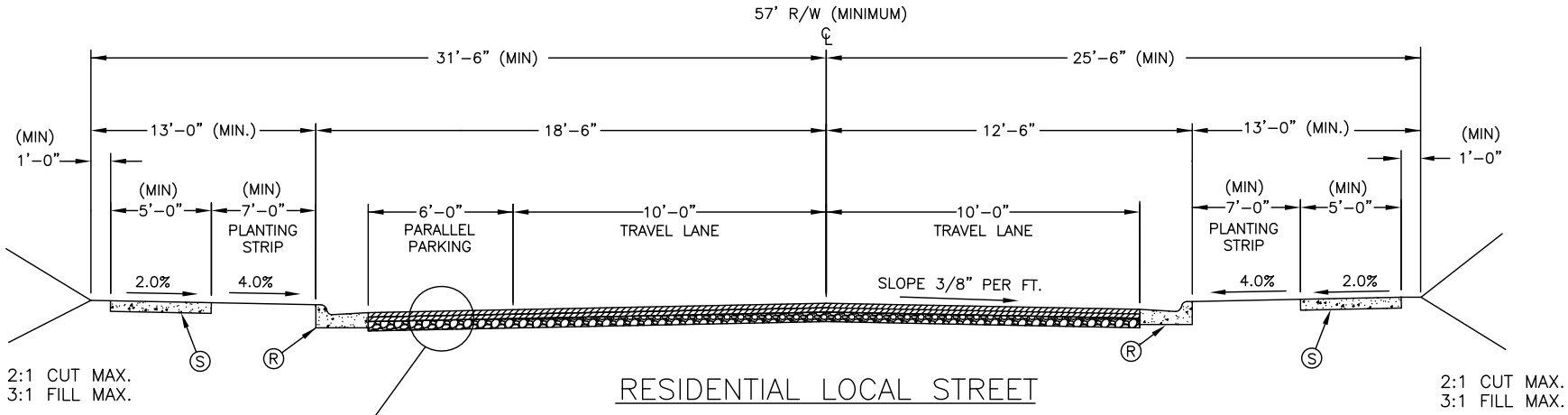

RESIDENTIAL LOCAL STREET

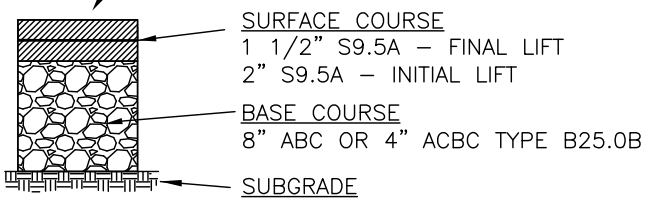

TYPICAL PAVEMENT SECTION

KEY

Ⓡ 2'–6" STD. CURB AND GUTTER

Ⓢ 4" CONCRETE SIDEWALK

NOTES:

1. SIDEWALK SHALL BE PROVIDED ON BOTH SIDES OF THE STREET.

2. SEE SECTION II. B. FOR ADDITIONAL DESIGN CRITERIA.

3. 2'–0" VALLEY GUTTER MAY BE SUBSTITUTED FOR 2'–6" CURB AND GUTTER ON THE SIDE OF THE STREET WITHOUT PARALLEL PARKING. THIS REDUCES THE MINIMUM RIGHT–OF–WAY BY SIX INCHES. 2'–0" VALLEY GUTTER MAY NOT BE SUBSTITUTED FOR 2'–6" CURB AND GUTTER ON THE SIDE OF THE STREET WITH PARALLEL PARKING.

4. REFER TO STANDARD DRAWING 710.1 & 711.1 FOR PARALLEL PARKING LAYOUT.

5. THIS IS THE TYPICAL RESIDENTIAL CROSS SECTION. THE APPROVED PLANS MAY INCLUDE ALTERNATIVE SECTIONS THAT ARE CONSISTENT WITH THE TOWN OF WAXHAW TRAFFIC CALMING POLICY.

NOT TO SCALE

	TOWN OF WAXHAW LAND DEVELOPMENT STANDARDS	RESIDENTIAL LOCAL STREET PARKING ON ONE SIDE OF STREET TYPICAL SECTION	REV. DATE 8/19 STD. NO. 200.2

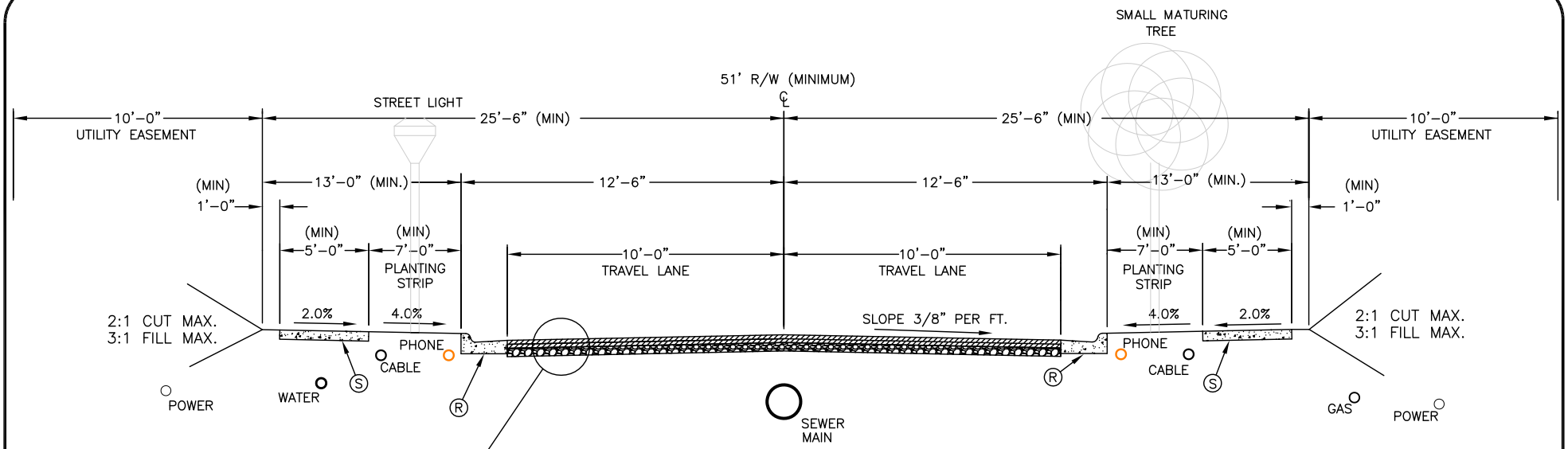

RESIDENTIAL LOCAL STREET

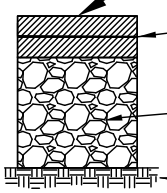

SURFACE COURSE
1 1/2" S9.5BA – FINAL LIFT
2" S9.5A – INITIAL LIFT

BASE COURSE
8" ABC OR 4" ACBC TYPE B25.0B

SUBGRADE

TYPICAL PAVEMENT SECTION

KEY

(R) 2'-6" STD. CURB AND GUTTER

(S) 4" CONCRETE SIDEWALK

NOTES:

1. SIDEWALK SHALL BE PROVIDED ON BOTH SIDES OF THE STREET.

2. SEE SECTION II. B. FOR ADDITIONAL DESIGN CRITERIA.

3. 2'-0" VALLEY GUTTER MAY BE SUBSTITUTED FOR 2'-6" CURB AND GUTTER.

4. THIS IS THE TYPICAL RESIDENTIAL CROSS SECTION. THE APPROVED PLANS MAY INCLUDE ALTERNATIVE SECTIONS THAT ARE CONSISTENT WITH THE TOWN OF WAXHAW TRAFFIC CALMING POLICY.

NOT TO SCALE

	TOWN OF WAXHAW LAND DEVELOPMENT STANDARDS	RESIDENTIAL LOCAL STREET NO ON STREET PARKING TYPICAL SECTION	REV. DATE 8/19 STD. NO. 200.3

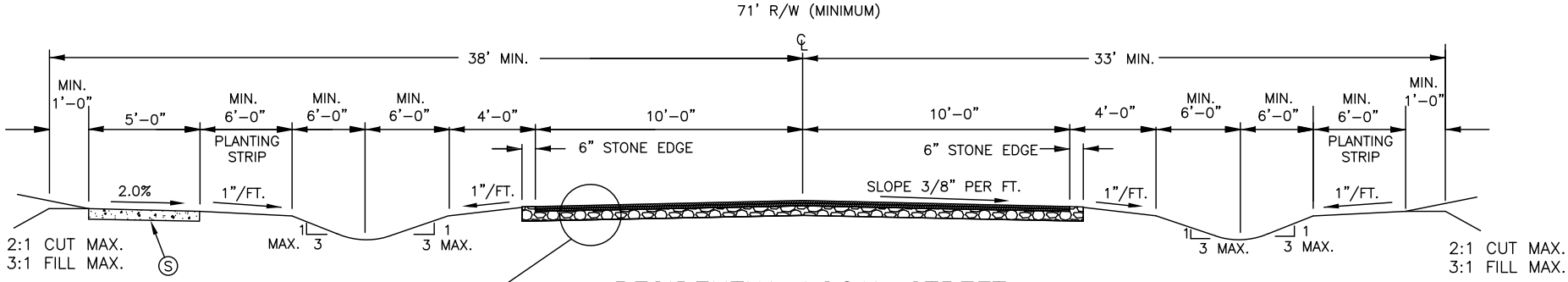

RESIDENTIAL LOCAL STREET

(DITCH TYPE)

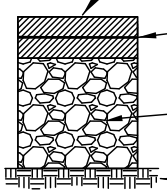

SURFACE COURSE
1 1/2" S9.5A – FINAL LIFT
2" S9.5A – INITIAL LIFT

BASE COURSE
8" ABC OR 4" ACBC TYPE B25.0B

SUBGRADE

TYPICAL PAVEMENT SECTION

NOTES:

1. APPROVAL BY THE TOWN ENGINEER IS REQUIRED PRIOR TO USING DITCH TYPE SECTION.

2. SEE SECTION II. B. FOR ADDITIONAL DESIGN CRITERIA.

3. TREES TO BE PLACED IN THE GREEN ZONE 3.5 FEET FROM EDGE OF SIDEWALK.

4. THIS IS THE TYPICAL RESIDENTIAL CROSS SECTION. THE APPROVED PLANS MAY INCLUDE ALTERNATIVE SECTIONS THAT ARE CONSISTENT WITH THE TOWN OF WAXHAW TRAFFIC CALMING POLICY.

KEY

(S) 4" CONCRETE SIDEWALK

NOT TO SCALE

	TOWN OF WAXHAW LAND DEVELOPMENT STANDARDS	RESIDENTIAL LOCAL STREET DITCH TYPE TYPICAL SECTION	REV. DATE 8/19 STD. NO. 200.4

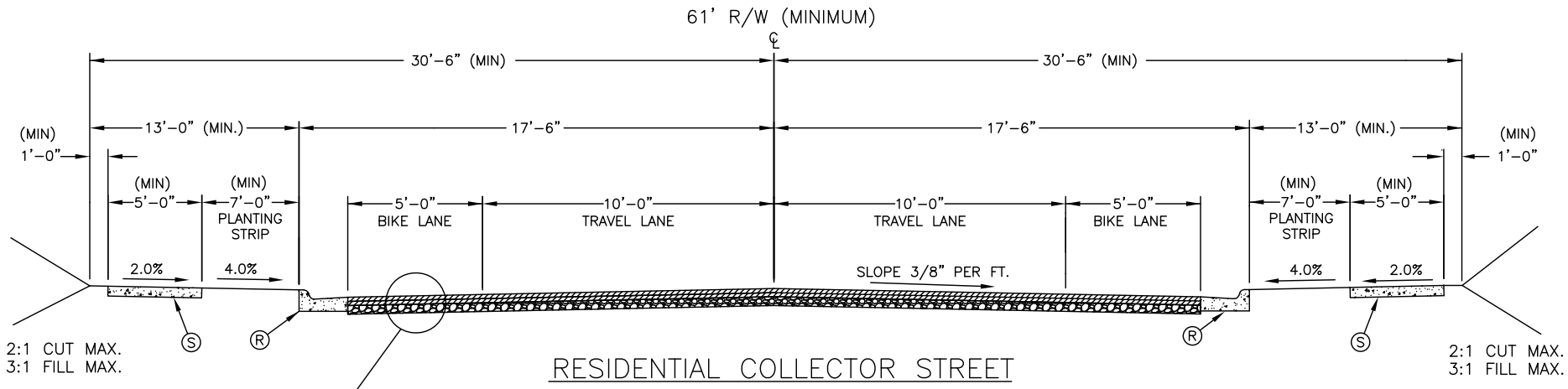

RESIDENTIAL COLLECTOR STREET

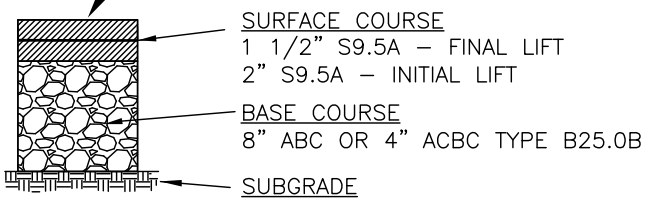

TYPICAL PAVEMENT SECTION

NOTES:

1. SIDEWALK SHALL BE PROVIDED ON BOTH SIDES OF THE STREET.

2. SEE SECTION II. B. FOR ADDITIONAL DESIGN CRITERIA.

3. BIKE LANE TO BE STRIPED.

4. THIS IS THE TYPICAL RESIDENTIAL CROSS SECTION. THE APPROVED PLANS MAY INCLUDE ALTERNATIVE SECTIONS THAT ARE CONSISTENT WITH THE TOWN OF WAXHAW TRAFFIC CALMING POLICY.

KEY

(R) 2'-6" STD. CURB AND GUTTER

(S) 4" CONCRETE SIDEWALK

NOT TO SCALE

	TOWN OF WAXHAW LAND DEVELOPMENT STANDARDS	RESIDENTIAL COLLECTOR STREET WITH BIKE LANES TYPICAL SECTION	REV. DATE 8/19 STD. NO. 210.1

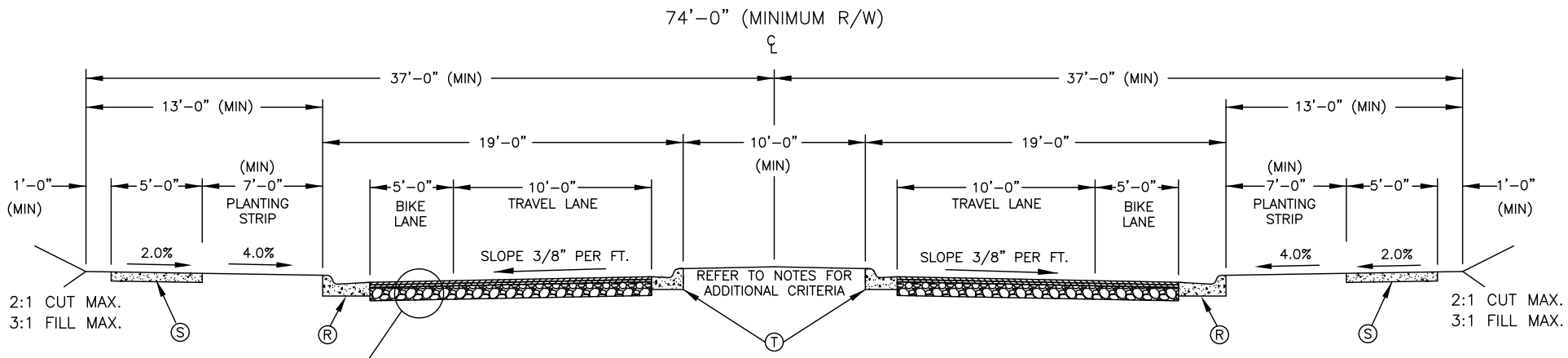

RESIDENTIAL DIVIDED COLLECTOR STREET

(TWO LANE SECTION)

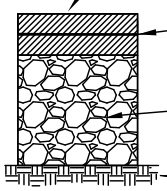

TYPICAL PAVEMENT SECTION

KEY

- (R) 2'–6" STD. CURB AND GUTTER
- (S) 4" CONCRETE SIDEWALK
- (T) 1'–6" MEDIAN CURB AND GUTTER

NOTES:

1. CURB RETURN RADIUS DIMENSIONS AT INTERSECTIONS MAY VARY DEPENDING ON MEDIAN WIDTH AND WILL BE APPROVED ON A CASE BY CASE BASIS.

2. SUBDRAINS ARE REQUIRED ON ALL MEDIANS. (TO BE TIED INTO STORM DRAINAGE SYSTEM.) REFER TO 312.1.

3. MEDIAN PLANTINGS SHALL NOT OBSTRUCT INTERSECTION SIGHT DISTANCE REQUIREMENTS.

4. A TEN (10) FOOT WIDE MEDIAN IS REQUIRED FOR SMALL MATURING TREES. A TWENTY (20) FOOT WIDE MEDIAN IS REQUIRED FOR LARGE MATURING TREES.

5. BIKE LANE TO BE STRIPED.

6. SEE SECTION II. B. FOR ADDITIONAL DESIGN CRITERIA.

NOT TO SCALE

	TOWN OF WAXHAW LAND DEVELOPMENT STANDARDS	RESIDENTIAL DIVIDED COLLECTOR STREET TYPICAL SECTION	REV. DATE 8/19 STD. NO. 210.2

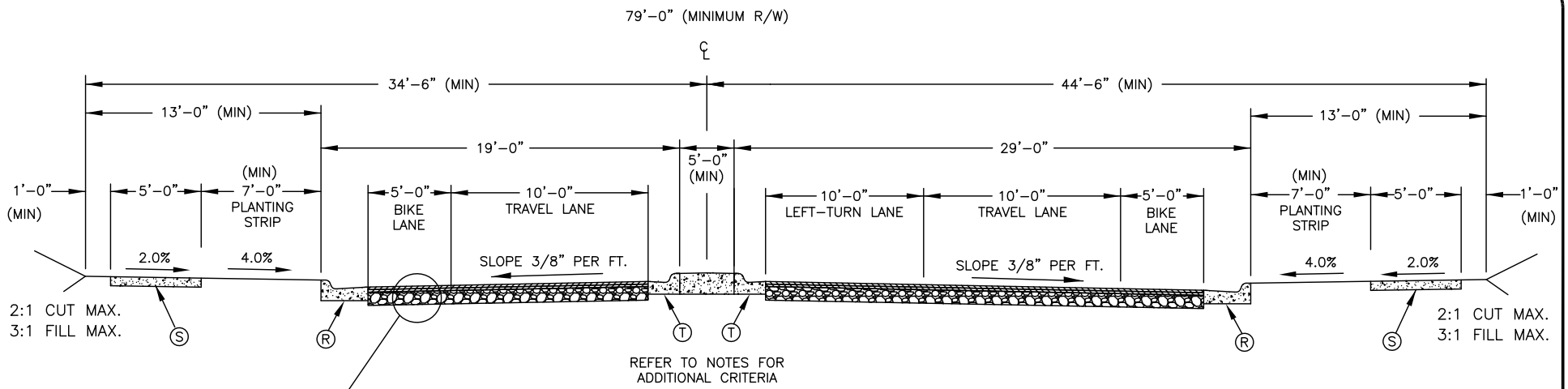

RESIDENTIAL DIVIDED COLLECTOR STREET

(TWO LANE SECTION)

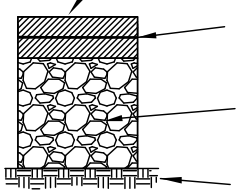

TYPICAL PAVEMENT SECTION

KEY

- (R) 2'-6" STANDARD CURB AND GUTTER
- (S) 4" CONCRETE SIDEWALK
- (T) 1'-6" MEDIAN CURB AND GUTTER

NOTES:

1. CURB RETURN RADIUS DIMENSIONS AT INTERSECTIONS MAY VARY DEPENDING ON MEDIAN WIDTH AND WILL BE APPROVED ON A CASE BY CASE BASIS.

2. SUBDRAINS ARE REQUIRED ON ALL MEDIANS. (TO BE TIED INTO STORM DRAINAGE SYSTEM.) REFER TO SUBDRAIN STANDARD DETAIL 312.1.

3. MEDIAN PLANTINGS SHALL NOT OBSTRUCT INTERSECTION SIGHT DISTANCE REQUIREMENTS.

4. TEN (10) FOOT WIDE MEDIANS CAN ACCOMMODATE SMALL MATURING TREES. TWENTY (20) FOOT WIDE MEDIAN IS REQUIRED FOR LARGE MATURING TREES.

5. MONOLITHIC CONCRETE MEDIANS WITH BEVELED EDGES AND A MINIMUM WIDTH OF 6 FEET CAN BE USED IN LIEU OF LANDSCAPED MEDIANS.

6. BIKE LANE TO BE STRIPED.

7. THIS IS THE TYPICAL RESIDENTIAL CROSS SECTION. THE APPROVED PLANS MAY INCLUDE ALTERNATIVE SECTIONS THAT ARE CONSISTENT WITH THE TOWN OF WAXHAW TRAFFIC CALMING POLICY.

8. SEE SECTION II. B. FOR ADDITIONAL DESIGN CRITERIA.

NOT TO SCALE

	TOWN OF WAXHAW LAND DEVELOPMENT STANDARDS	RESIDENTIAL DIVIDED COLLECTOR STREET WITH LEFT-TURN LANE TYPICAL SECTION	REV. DATE 8/19 STD. NO. 210.3

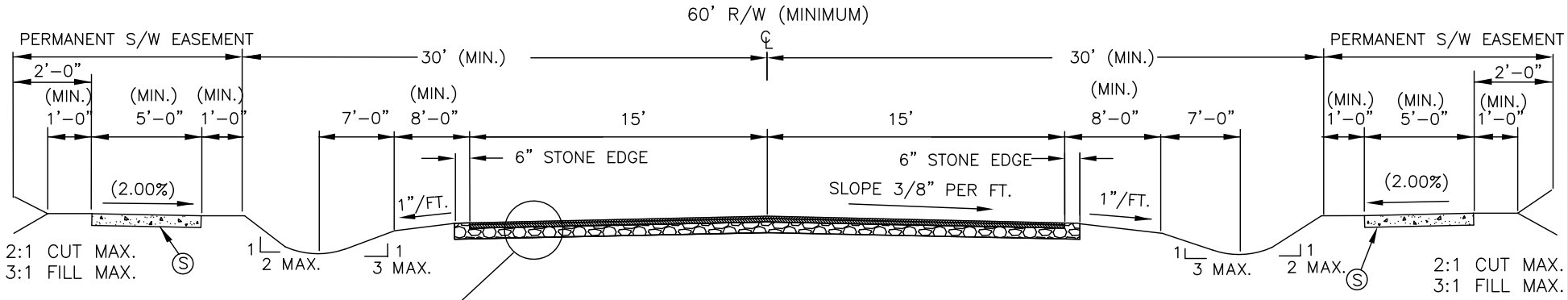

RESIDENTIAL COLLECTOR STREET

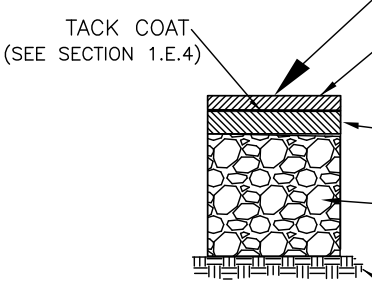

SURFACE COURSE
1 1/2" SF9.5A
FINAL LIFT TO BE APPLIED UPON MEETING ONE OF THE FOLLOWING CONDITIONS:
1) 75% DEVELOPMENT OCCUPANCY,
2) 1 YEAR FROM INTERMEDIATE COURSE PLACEMENT,
3) FOR NCDOT MAINTAINED STREETS, FINAL 1" MAY BE PLACED WHEN APPROVED BY NCDOT.

INTERMEDIATE COURSE
2" SF9.5A

BASE COURSE
8" COMPACTED AGGREGATE BASE COURSE, OR 4" BCBC TYPE B25.0B SHOULD ENTIRE DEVELOPMENT HAVE A CBR OF 6 OR GREATER, THEN AN ALTERNATIVE BASE COURSE PAVEMENT DESIGN MAY BE SUBMITTED TO THE TOWN ENGINEER FOR APPROVAL.

SUBGRADE
COMPACTED SUBGRADE

TYPICAL MINIMUM PAVEMENT SECTION
(SEE NOTE 4.)

KEY

(S) 4" CONCRETE SIDEWALK

NOTES:

1. SIDEWALK SHALL BE ON BOTH SIDES OF STREET AND LOCATED ON LOT SIDE OF DITCH.
2. SIDEWALK LOCATED OUTSIDE OF STREET RIGHT OF WAY SHALL HAVE A 5 FOOT PERMANENT SIDEWALK EASEMENT.
3. APPROVAL BY THE TOWN ENGINEER IS REQUIRED PRIOR TO USING DITCH TYPE SECTION.
4. AN ALTERNATIVE PAVEMENT DESIGN MAY BE REQUIRED BY TOWN ENGINEER BASED ON SPECIFIC TRAFFIC PARAMETERS.
5. THIS IS THE TYPICAL RESIDENTIAL CROSS SECTION. THE APPROVED PLANS MAY INCLUDE ALTERNATIVE SECTIONS THAT ARE CONSISTENT WITH THE TOWN OF WAXHAW TRAFFIC CALMING POLICY.

NOT TO SCALE

TOWN OF WAXHAW LAND DEVELOPMENT STANDARDS	RESIDENTIAL COLLECTOR STREET DITCH TYPE STREET TYPICAL SECTION COMPREHENSIVE STREET CLASSIFICATION SYSTEM (CLASS V)	STD. NO. 210.4	REV. 8/19

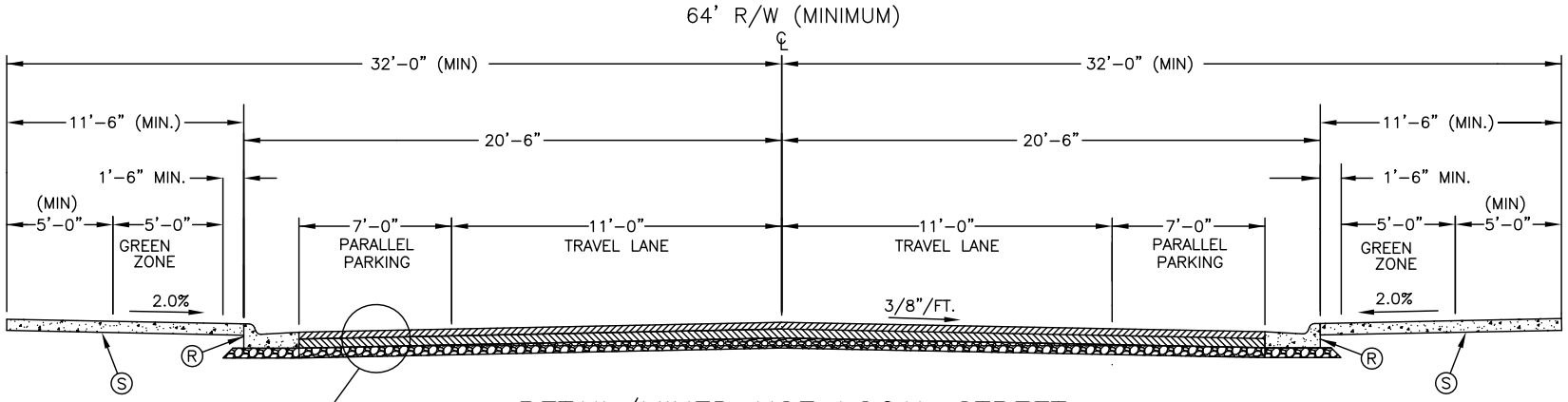

RETAIL/MIXED USE LOCAL STREET

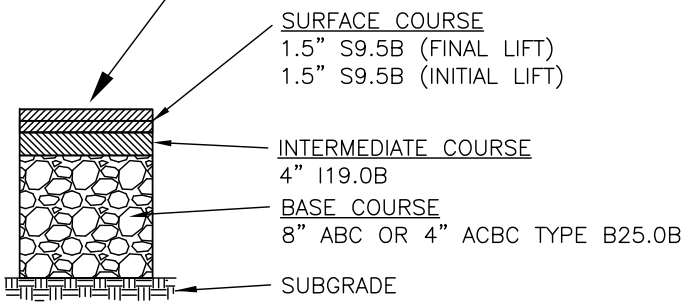

TYPICAL PAVEMENT SECTION

KEY

(R) 2'-6" STD. CURB AND GUTTER

(S) 4" CONCRETE SIDEWALK

NOTES:

1. SIDEWALK SHALL BE PROVIDED ON BOTH SIDES OF THE STREET.

2. SEE SECTION II. B. FOR ADDITIONAL DESIGN CRITERIA.

3. REFER TO STANDARD DRAWINGS 602.1 – 605.1 REGARDING SIDEWALK AROUND TREE GRATES. TREE GRATES SHALL BE PROVIDED WHEN TREES ARE LOCATED IN THE GREEN ZONE.

4. BASE COURSE TO EXTEND SIX INCHES BEYOND BACK OF CURB THEN TAPER OUT AT A FORTY-FIVE DEGREE ANGLE.

5. REFER TO STANDARD DRAWING 285.1 FOR PARALLEL PARKING LAYOUT.

6. THIS IS THE TYPICAL RETAIL/MIXED USE LOCAL STREET CROSS SECTION. THE APPROVED PLANS MAY INCLUDE ALTERNATIVE SECTIONS THAT ARE CONSISTENT WITH THE TOWN OF WAXHAW TRAFFIC CALMING POLICY.

NOT TO SCALE

	TOWN OF WAXHAW LAND DEVELOPMENT STANDARDS	RETAIL/MIXED USE LOCAL STREET PARKING ON BOTH SIDES OF STREET TYPICAL SECTION	REV. DATE 8/19 STD. NO. 220.1

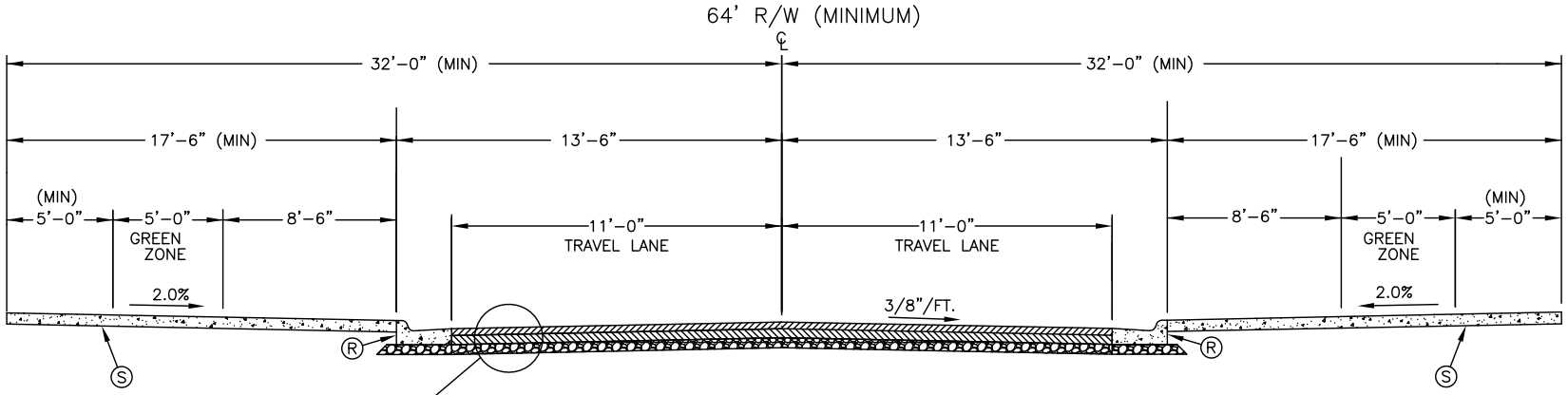

RETAIL/MIXED USE LOCAL STREET

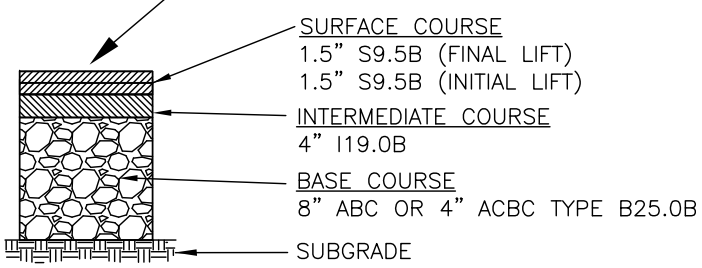

TYPICAL PAVEMENT SECTION

KEY

(R) 2'–6" STD. CURB AND GUTTER

(S) 4" CONCRETE SIDEWALK

NOTES:

1. SIDEWALK SHALL BE PROVIDED ON BOTH SIDES OF THE STREET.

2. SEE SECTION II. B. FOR ADDITIONAL DESIGN CRITERIA.

3. REFER TO STANDARD DRAWINGS 602.1 – 605.1 REGARDING SIDEWALK AROUND TREE GRATES. TREE GRATES SHALL BE PROVIDED WHEN TREES ARE LOCATED IN THE GREEN ZONE.

4. BASE COURSE TO EXTEND SIX INCHES BEYOND BACK OF CURB THEN TAPER OUT AT A FORTY–FIVE DEGREE ANGLE.

5. DRAWING TO BE USED IN CONJUNCTION WITH STANDARD 220.1 AND 285.1.

6. THIS IS THE TYPICAL RETAIL/MIXED USE LOCAL STREET CROSS SECTION. THE APPROVED PLANS MAY INCLUDE ALTERNATIVE SECTIONS THAT ARE CONSISTENT WITH THE TOWN OF WAXHAW TRAFFIC CALMING POLICY.

NOT TO SCALE

	TOWN OF WAXHAW LAND DEVELOPMENT STANDARDS	RETAIL/MIXED USE LOCAL STREET NO PARKING TYPICAL SECTION	REV. DATE 8/19 STD. NO. 220.2

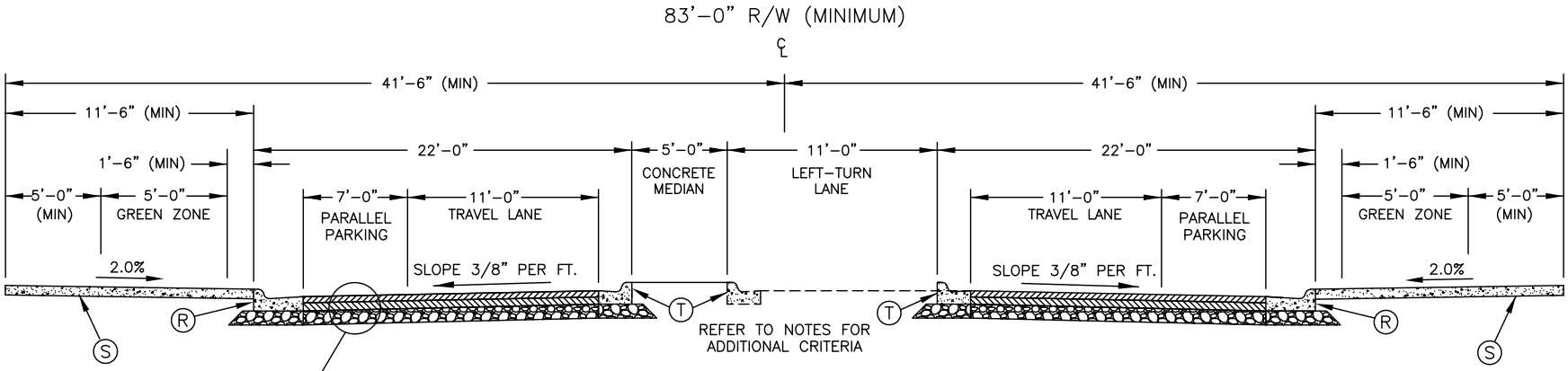

RETAIL/MIXED USE LOCAL STREET

(TWO LANE SECTION)

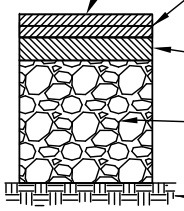

SURFACE COURSE
1.5" S9.5B (FINAL LIFT)
1.5" S9.5B (INITIAL LIFT)

INTERMEDIATE COURSE
4" I19.0B

BASE COURSE
8" ABC OR 4" ACBC TYPE B25.0B

SUBGRADE

TYPICAL PAVEMENT SECTION

KEY

- (R) 2'-6" STANDARD CURB AND GUTTER
- (S) 4" CONCRETE SIDEWALK
- (T) 1'-6" MEDIAN CURB AND GUTTER

NOTES:

1. SIDEWALK SHALL BE PROVIDED ON BOTH SIDES OF THE STREET.
2. SEE SECTION II. B. FOR ADDITIONAL DESIGN CRITERIA.
3. REFER TO STANDARD DRAWINGS 602.1 – 605.1 REGARDING SIDEWALK AROUND TREE GRATES. TREE GRATES SHALL BE PROVIDED WHEN TREES ARE LOCATED IN THE GREEN ZONE.
4. FOR MEDIAN DIVIDED FACILITIES, A MINIMUM SIXTEEN (16) FOOT WIDE MEDIAN WITH ONE FOOT SIX INCH CURB AND GUTTER IS NEEDED. WHERE A LEFT-TURN LANE IS NOT INSTALLED, THE MEDIAN SHALL BE LANDSCAPED.
5. BASE COURSE TO EXTEND SIX INCHES BEYOND BACK OF CURB THEN TAPER OUT AT A FORTY-FIVE DEGREE ANGLE.
6. REFER TO STANDARD DRAWING 285.1 FOR PARALLEL PARKING LAYOUT.
7. THIS IS THE TYPICAL RETAIL/MIXED USE LOCAL STREET CROSS SECTION. THE APPROVED PLANS MAY INCLUDE ALTERNATIVE SECTIONS THAT ARE CONSISTENT WITH THE TOWN OF WAXHAW TRAFFIC CALMING POLICY.

NOT TO SCALE

	TOWN OF WAXHAW LAND DEVELOPMENT STANDARDS	RETAIL/MIXED USE LOCAL STREET WITH MEDIAN AND PARKING TYPICAL SECTION	REV. DATE 8/19 STD. NO. 220.3

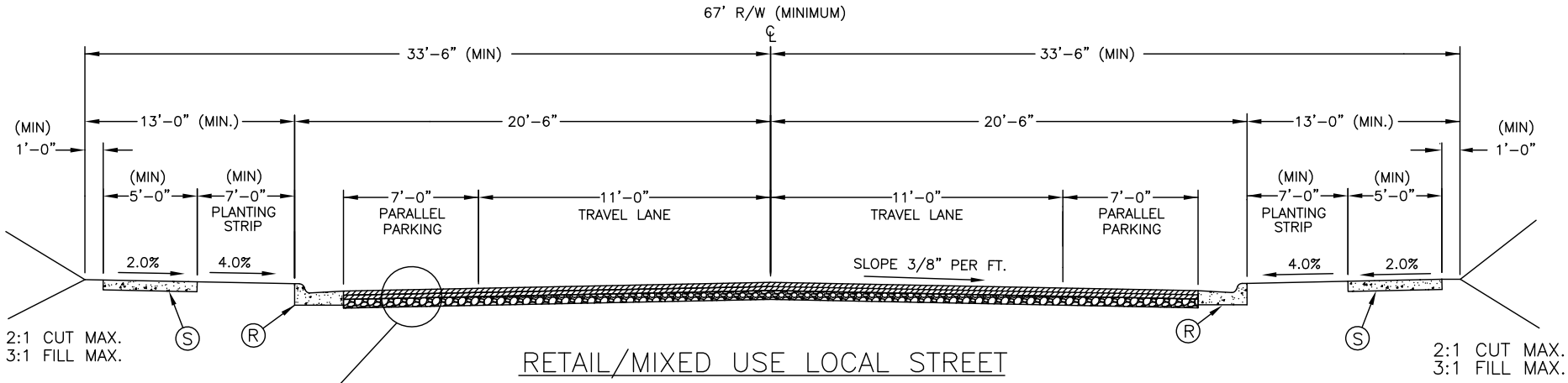

RETAIL/MIXED USE LOCAL STREET

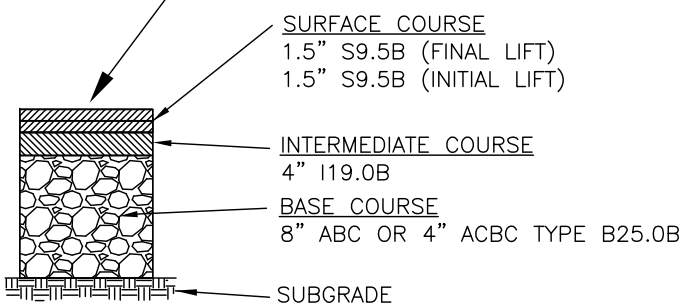

TYPICAL PAVEMENT SECTION

NOTES:

1. SIDEWALK SHALL BE PROVIDED ON BOTH SIDES OF THE STREET.

2. SEE SECTION II. B. FOR ADDITIONAL DESIGN CRITERIA.

3. BASE COURSE TO EXTEND SIX INCHES BEYOND BACK OF CURB THEN TAPER OUT AT A FOURTY-FIVE DEGREE ANGLE.

4. REFER TO STANDARD DRAWING 285.1 FOR PARALLEL PARKING LAYOUT.

5. THIS IS THE TYPICAL RETAIL/MIXED USE LOCAL STREET CROSS SECTION. THE APPROVED PLANS MAY INCLUDE ALTERNATIVE SECTIONS THAT ARE CONSISTENT WITH THE TOWN OF WAXHAW TRAFFIC CALMING POLICY.

KEY

(R) 2'-6" STD. CURB AND GUTTER

(S) 4" CONCRETE SIDEWALK

NOT TO SCALE

	TOWN OF WAXHAW LAND DEVELOPMENT STANDARDS	RETAIL/MIXED USE LOCAL STREET PARKING AND GREEN ZONE ON BOTH SIDES TYPICAL SECTION	REV. DATE 8/19 STD. NO. 220.4

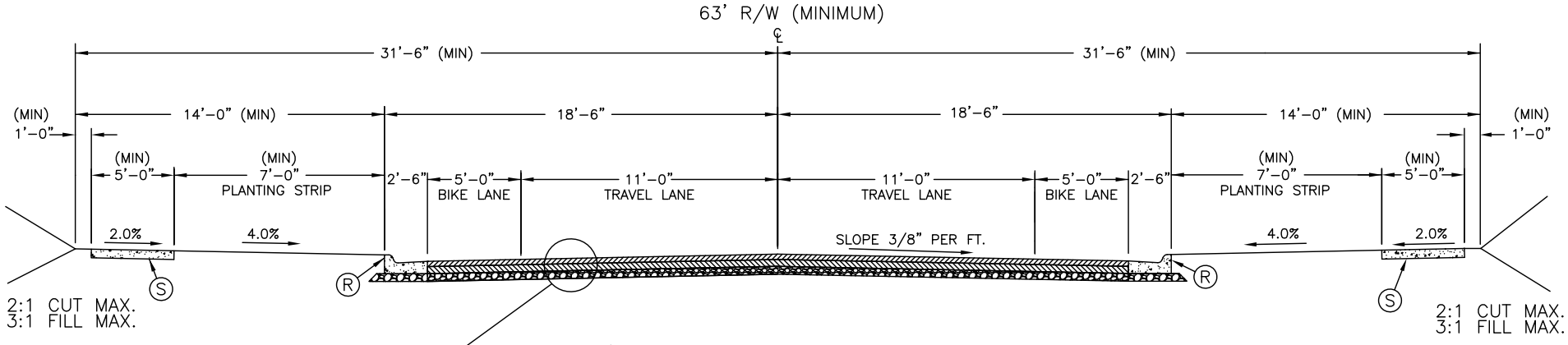

RETAIL/MIXED USE COLLECTOR STREET

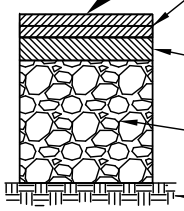

TYPICAL PAVEMENT SECTION

KEY

(R) 2'-6" STANDARD CURB AND GUTTER

(S) 4" CONCRETE SIDEWALK

NOTES:

1. SIDEWALK SHALL BE PROVIDED ON BOTH SIDES OF THE STREET.

2. SEE SECTION II. B. FOR ADDITIONAL DESIGN CRITERIA.

3. BASE COURSE TO EXTEND SIX INCHES BEYOND BACK OF CURB THEN TAPER OUT AT A FORTY-FIVE DEGREE ANGLE.

4. THIS IS THE TYPICAL RETAIL/MIXED USE LOCAL STREET CROSS SECTION. THE APPROVED PLANS MAY INCLUDE ALTERNATIVE SECTIONS THAT ARE CONSISTENT WITH THE TOWN OF WAXHAW TRAFFIC CALMING POLICY.

NOT TO SCALE

	TOWN OF WAXHAW LAND DEVELOPMENT STANDARDS	RETAIL/MIXED USE COLLECTOR STREET WITH BIKE LANES TYPICAL SECTION	REV. DATE 8/19 STD. NO. 230.1

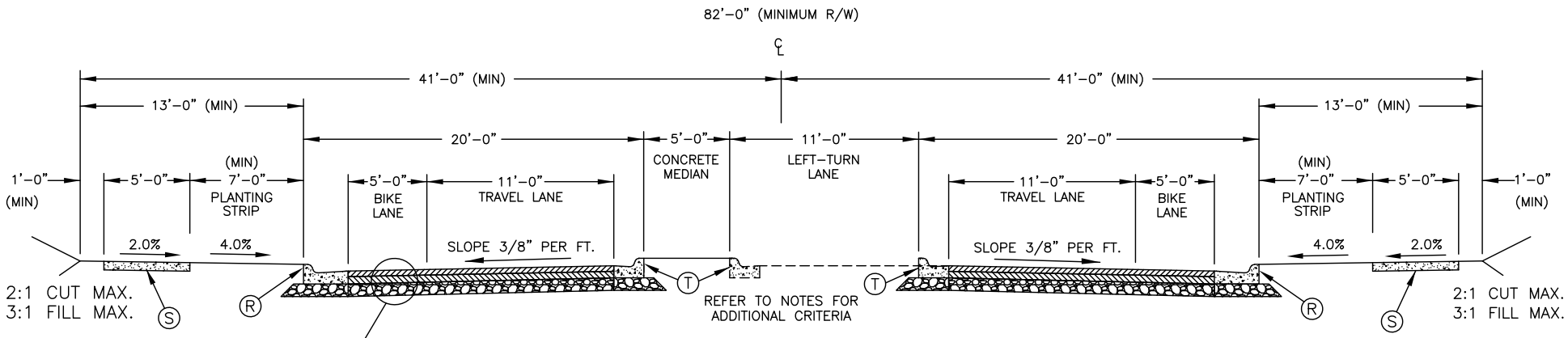

RETAIL/MIXED USE COLLECTOR STREET

(TWO LANE SECTION)

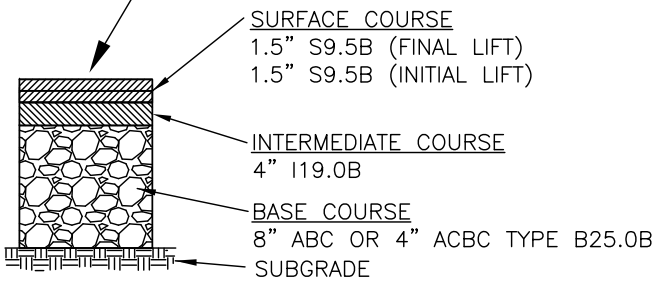

TYPICAL PAVEMENT SECTION

KEY

- (R) 2'-6" STANDARD CURB AND GUTTER
- (S) 4" CONCRETE SIDEWALK
- (T) 1'-6" MEDIAN CURB AND GUTTER

NOTES:

1. SIDEWALK SHALL BE PROVIDED ON BOTH SIDES OF THE STREET.

2. SEE SECTION II. B. FOR ADDITIONAL DESIGN CRITERIA.

3. FOR MEDIAN DIVIDED FACILITIES, A MINIMUM SIXTEEN (16) FOOT WIDE MEDIAN WITH ONE FOOT SIX INCH CURB AND GUTTER IS NEEDED. IF A LEFT-TURN LANE IS NOT NEEDED, THE MEDIAN SHALL BE LANDSCAPED.

4. BASE COURSE TO EXTEND SIX INCHES BEYOND BACK OF CURB THEN TAPER OUT AT A FORTY-FIVE DEGREE ANGLE.

5. THIS IS THE TYPICAL RETAIL/MIXED USE LOCAL STREET CROSS SECTION. THE APPROVED PLANS MAY INCLUDE ALTERNATIVE SECTIONS THAT ARE CONSISTENT WITH THE TOWN OF WAXHAW TRAFFIC CALMING POLICY.

NOT TO SCALE

	TOWN OF WAXHAW LAND DEVELOPMENT STANDARDS	RETAIL/MIXED USE COLLECTOR STREET WITH MEDIAN AND BIKE LANES TYPICAL SECTION	REV. DATE 8/19 STD. NO. 230.2

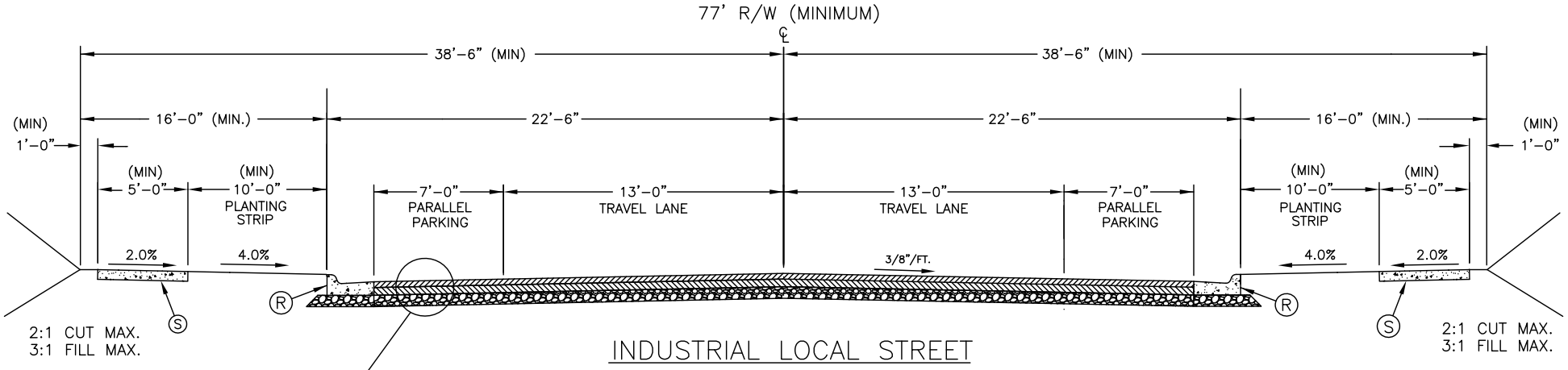

INDUSTRIAL LOCAL STREET

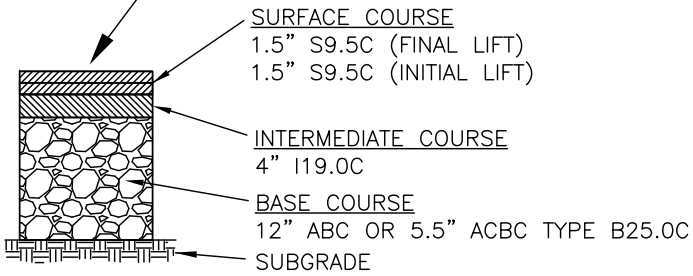

TYPICAL PAVEMENT SECTION

NOTES:

1. SIDEWALK SHALL BE PROVIDED ON BOTH SIDES OF THE STREET.

2. SEE SECTION II. B. FOR ADDITIONAL DESIGN CRITERIA.

3. BASE COURSE TO EXTEND SIX INCHES BEYOND BACK OF CURB THEN TAPER OUT AT A FORTY-FIVE DEGREE ANGLE.

4. TREE TO BE PLANTED FOUR FEET FROM SIDEWALK.

5. THIS IS THE TYPICAL INDUSTRIAL LOCAL STREET CROSS SECTION. THE APPROVED PLANS MAY INCLUDE ALTERNATIVE SECTIONS THAT ARE CONSISTENT WITH THE TOWN OF WAXHAW TRAFFIC CALMING POLICY.

KEY

(R) 2'-6" STANDARD CURB AND GUTTER

(S) 4" CONCRETE SIDEWALK

NOT TO SCALE

	TOWN OF WAXHAW LAND DEVELOPMENT STANDARDS	INDUSTRIAL LOCAL STREET PARKING ON BOTH SIDES OF STREET TYPICAL SECTION	REV. DATE 8/19 STD. NO. 240.1

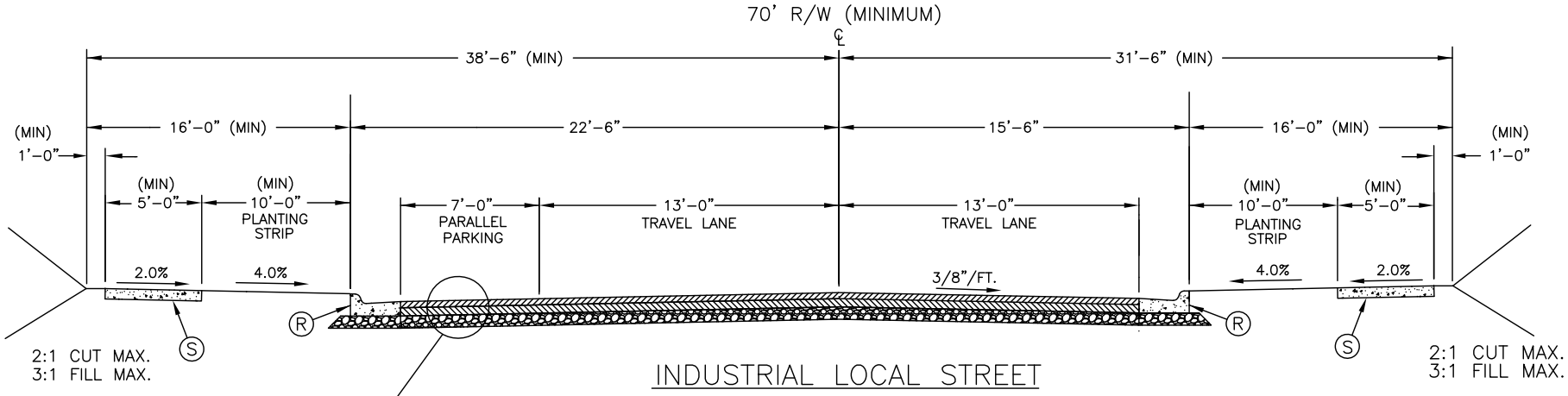

INDUSTRIAL LOCAL STREET

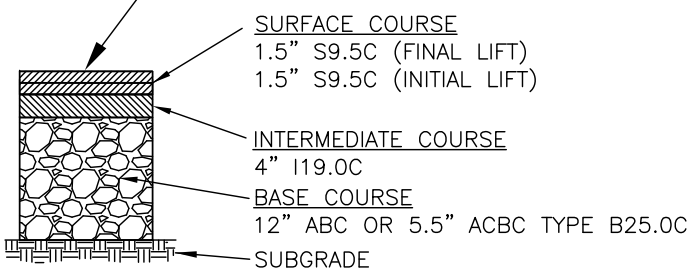

TYPICAL PAVEMENT SECTION

NOTES:

1. SIDEWALK SHALL BE PROVIDED ON BOTH SIDES OF THE STREET.

2. SEE SECTION II. B. FOR ADDITIONAL DESIGN CRITERIA.

3. BASE COURSE TO EXTEND SIX INCHES BEYOND BACK OF CURB THEN TAPER OUT AT A FORTY-FIVE DEGREE ANGLE.

4. TREE TO BE PLANTED FOUR FEET FROM SIDEWALK.

5. THIS IS THE TYPICAL INDUSTRIAL LOCAL STREET CROSS SECTION. THE APPROVED PLANS MAY INCLUDE ALTERNATIVE SECTIONS THAT ARE CONSISTENT WITH THE TOWN OF WAXHAW TRAFFIC CALMING POLICY.

KEY

(R) 2'-6" STANDARD CURB AND GUTTER

(S) 4" CONCRETE SIDEWALK

NOT TO SCALE

	TOWN OF WAXHAW LAND DEVELOPMENT STANDARDS	INDUSTRIAL LOCAL STREET PARKING ON ONE SIDE OF STREET TYPICAL SECTION	REV. DATE 8/19 STD. NO. 240.2

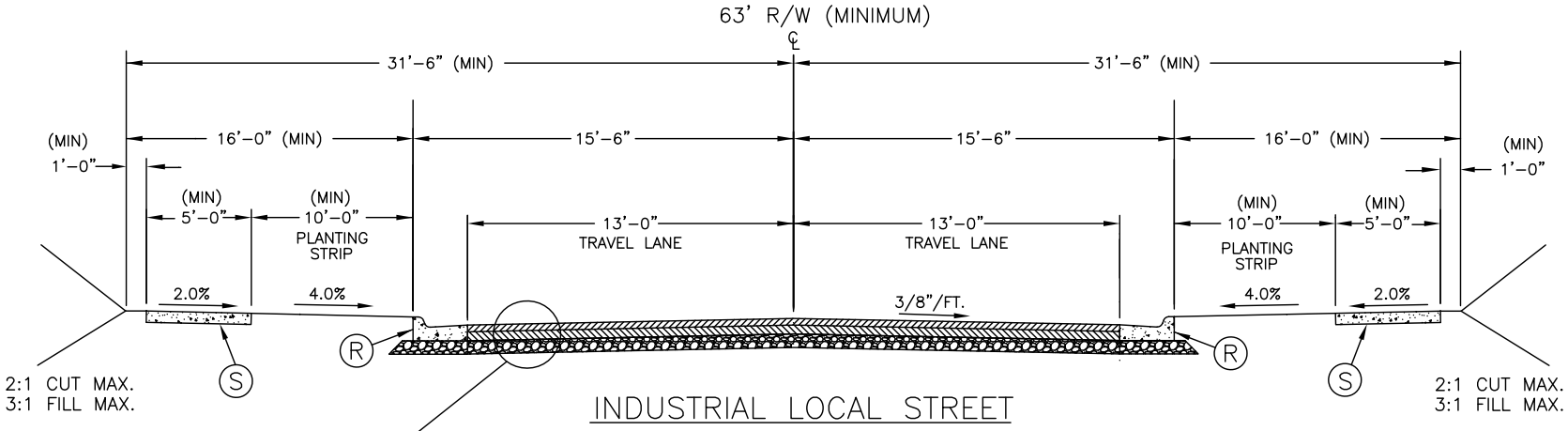

INDUSTRIAL LOCAL STREET

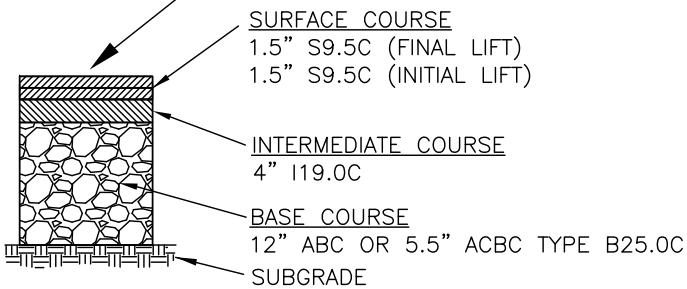

TYPICAL PAVEMENT SECTION

NOTES:

1. SIDEWALK SHALL BE PROVIDED ON BOTH SIDES OF THE STREET.

2. SEE SECTION II. B. FOR ADDITIONAL DESIGN CRITERIA.

3. BASE COURSE TO EXTEND SIX INCHES BEYOND BACK OF CURB THEN TAPER OUT AT A FORTY-FIVE DEGREE ANGLE.

4. TREES TO BE PLANTED FOUR FEET FROM SIDEWALK.

5. THIS IS THE TYPICAL INDUSTRIAL LOCAL STREET CROSS SECTION. THE APPROVED PLANS MAY INCLUDE ALTERNATIVE SECTIONS THAT ARE CONSISTENT WITH THE TOWN OF WAXHAW TRAFFIC CALMING POLICY.

KEY

(R) 2'-6" STANDARD CURB AND GUTTER

(S) 4" CONCRETE SIDEWALK

NOT TO SCALE

	TOWN OF WAXHAW LAND DEVELOPMENT STANDARDS	INDUSTRIAL LOCAL STREET NO PARKING TYPICAL SECTION	REV. DATE 8/19 STD. NO. 240.3

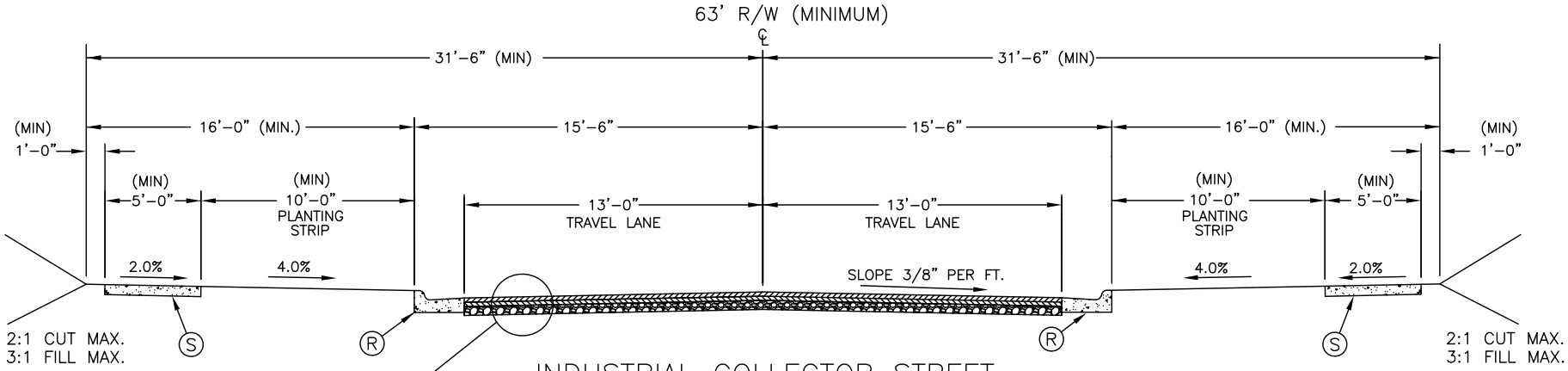

INDUSTRIAL COLLECTOR STREET

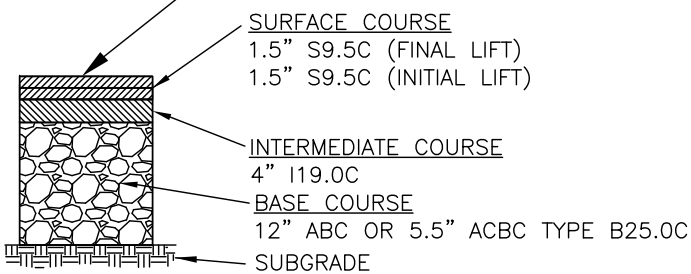

TYPICAL PAVEMENT SECTION

NOTES:

1. SIDEWALK SHALL BE PROVIDED ON BOTH SIDES OF THE STREET.

2. SEE SECTION II. B. FOR ADDITIONAL DESIGN CRITERIA.

3. BASE COURSE TO EXTEND SIX INCHES BEYOND BACK OF CURB THEN TAPER OUT AT A FORTY-FIVE DEGREE ANGLE.

4. TREE TO BE PLANTED FOUR FEET FROM SIDEWALK.

KEY

(R) 2'-6" STANDARD CURB AND GUTTER

(S) 4" CONCRETE SIDEWALK

NOT TO SCALE

	TOWN OF WAXHAW LAND DEVELOPMENT STANDARDS	INDUSTRIAL COLLECTOR STREET NO ON-STREET PARKING TYPICAL SECTION	REV. DATE STD. NO. 250.1

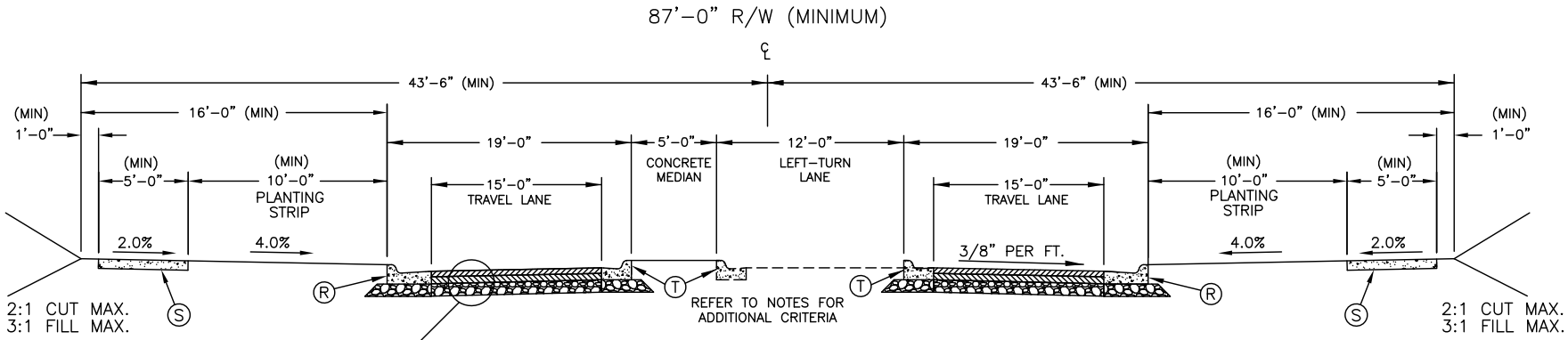

INDUSTRIAL COLLECTOR STREET

(TWO LANE SECTION)

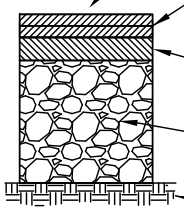

SURFACE COURSE
1.5" S9.5C (FINAL LIFT)
1.5" S9.5C (INITIAL LIFT)

INTERMEDIATE COURSE
4" I19.0C

BASE COURSE
12" ABC OR 5.5" ACBC TYPE B25.0C

SUBGRADE

TYPICAL PAVEMENT SECTION

NOTES:

1. SIDEWALK SHALL BE PROVIDED ON BOTH SIDES OF THE STREET.

2. SEE SECTION II. B. FOR ADDITIONAL DESIGN CRITERIA.

3. FOR MEDIAN DIVIDED FACILITIES, A MINIMUM TWENTY (20) FOOT WIDE MEDIAN WITH ONE FOOT SIX INCH CURB AND GUTTER IS NEEDED. IF A LEFT-TURN LANE IS NOT NEEDED, THE MEDIAN SHALL BE LANDSCAPED.

4. BASE COURSE TO EXTEND SIX INCHES BEYOND BACK OF CURB THEN TAPER OUT AT A FORTY-FIVE DEGREE ANGLE.

5. TREE TO BE PLANTED FOUR FEET FROM SIDEWALK.

KEY

(R) 2'-6" STANDARD CURB AND GUTTER
(S) 4" CONCRETE SIDEWALK
(T) 1'-6" MEDIAN CURB AND GUTTER

NOT TO SCALE

	TOWN OF WAXHAW LAND DEVELOPMENT STANDARDS	INDUSTRIAL COLLECTOR STREET WITH MEDIAN AND NO PARKING TYPICAL SECTION	REV. DATE STD. NO. 250.2

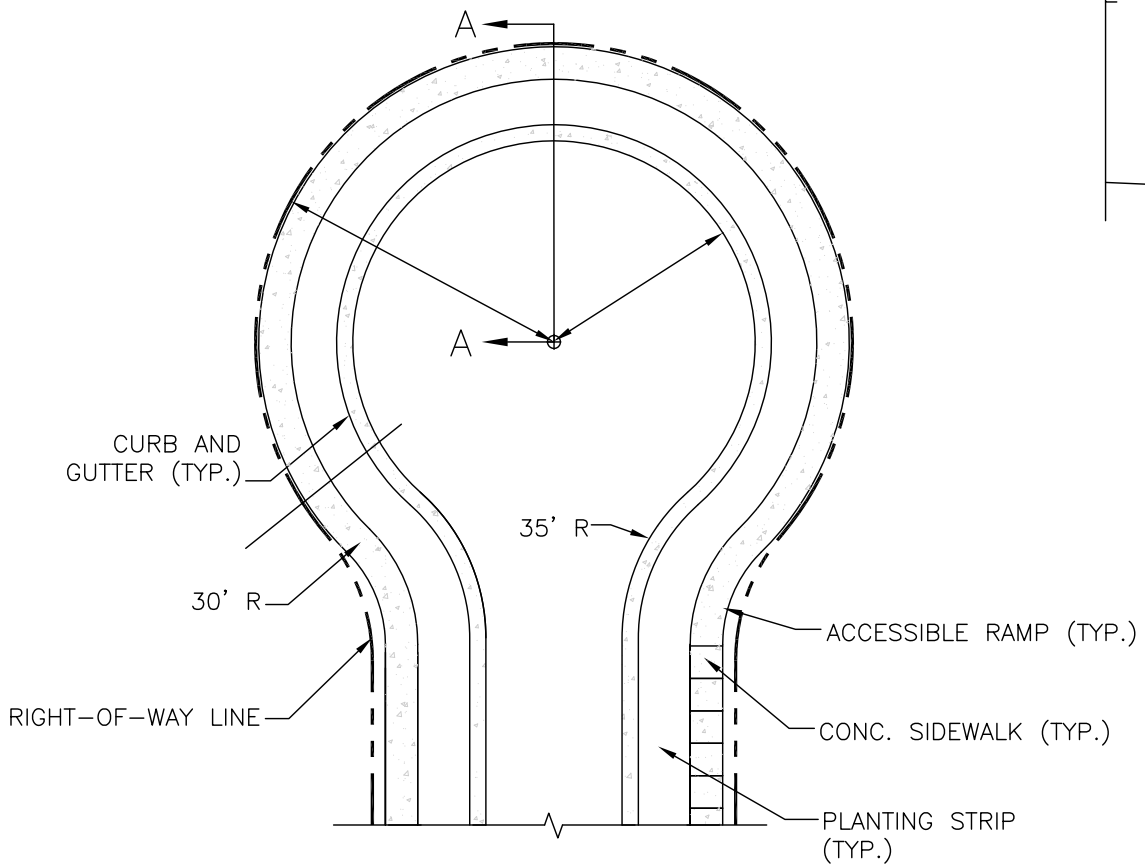

STANDARD CUL-DE-SAC

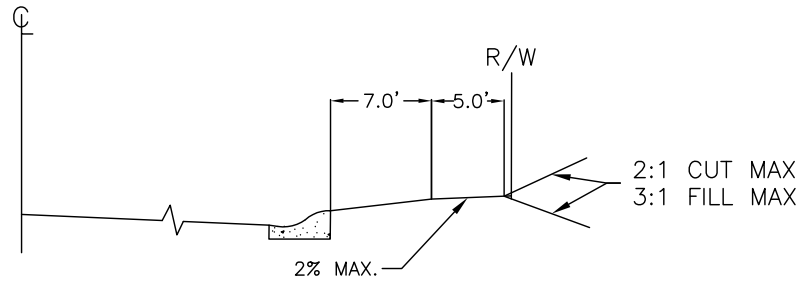

SECTION A-A

PLEASE NOTE: DRIVEWAY STANDARD MAX. SLOPES AND BREAKOVERS APPLY

NOTES:

1. ALTERNATIVE CUL-DE-SAC DESIGNS, INCLUDING ISLANDS SHALL BE SUBMITTED TO THE TOWN ENGINEER FOR REVIEW AND APPROVAL.
2. THE CROWN FOR PAVEMENT SHALL BE 1/4" PER FT FROM THE CENTER OF THE CUL-DE-SAC.
3. REFER TO NCDOT STANDARDS FOR DITCH TYPE STREETS.

NOTE: THIS DETAIL IS NOT FOR USE ON NCDOT-MAINTAINED STREETS. REFER TO NCDOT SUBDIVISION ROADS MINIMUM CONSTRUCTION STANDARDS MANUAL.

NOT TO SCALE

RESIDENTIAL LOCAL STREET CUL-DE-SAC DETAIL

STD. NO.	REV.
280.1	8/19

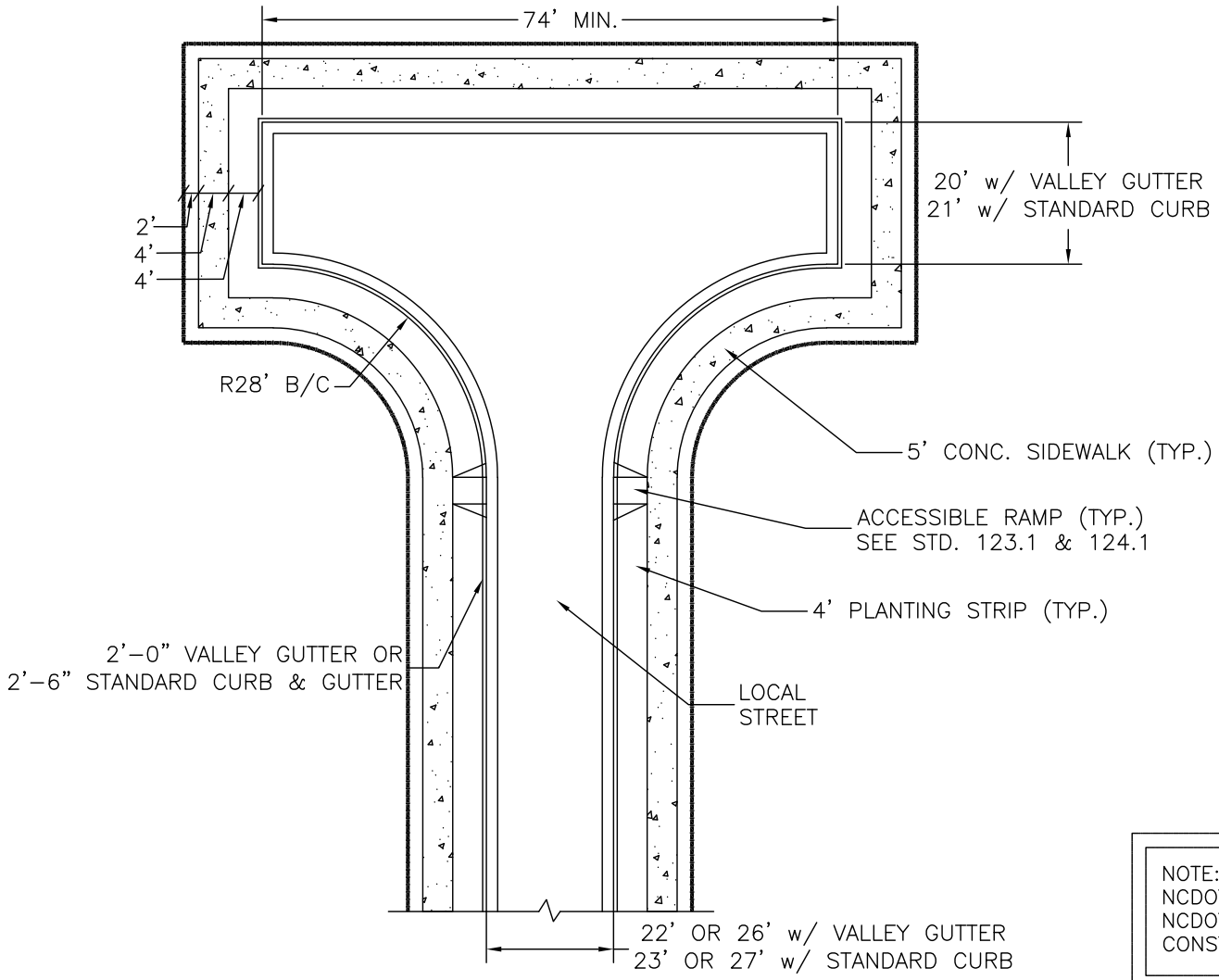

NOTES

1. THIS DESIGN ACCOMMODATES SINGLE-UNIT TRUCK BUT NOT A FIRE DEPARTMENT LADDER TRUCK. TO DESIGN FOR A LADDER TRUCK REQUIRES A HAMMERHEAD OF 120 FEET IN LENGTH.

2. VARIATIONS ON THIS DESIGN (E.G., WYES, TURNAROUNDS IN THE STEM, ROTATION OF ENTRY POINT, ETC.) CAN BE SUBMITTED TO TOWN ENGINEER FOR REVIEW AND APPROVAL ON A CASE-BY-CASE BASIS.

NOTE: THIS DETAIL IS NOT FOR USE ON NCDOT-MAINTAINED STREETS. REFER TO NCDOT SUBDIVISION ROADS MINIMUM CONSTRUCTION STANDARDS MANUAL.

NOT TO SCALE

TOWN OF WAXHAW LAND DEVELOPMENT STANDARDS	RETAIL/MIXED USE LOCAL STREET HAMMERHEAD DETAIL	STD. NO. 280.2	REV. 8/19

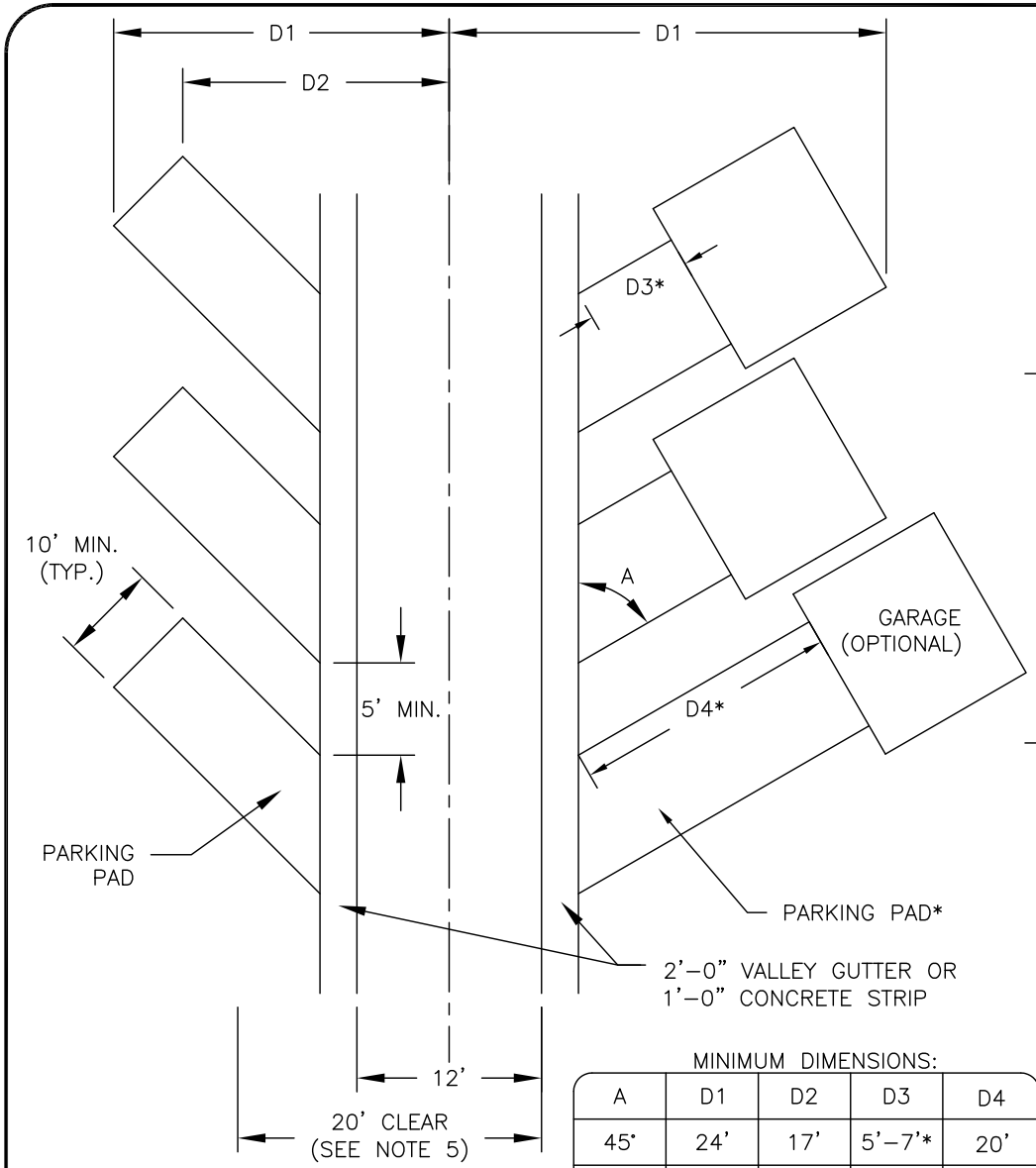

PLAN

MINIMUM DIMENSIONS:

A	D1	D2	D3	D4
45°	24'	17'	5'-7'*	20'
60°	26.5'	17.8'	5'-7'*	20'

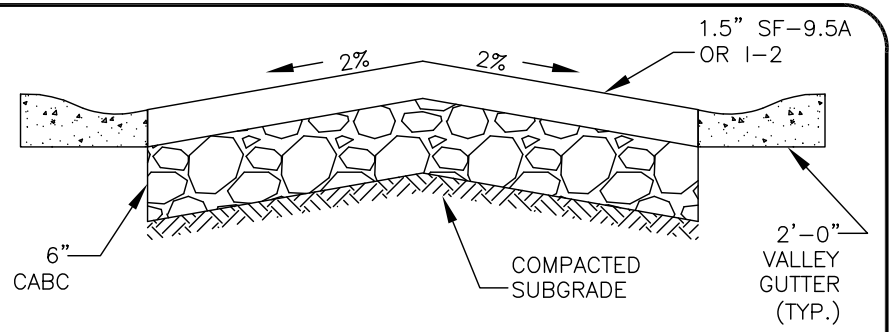

ALLEY WITH NORMAL CROWN

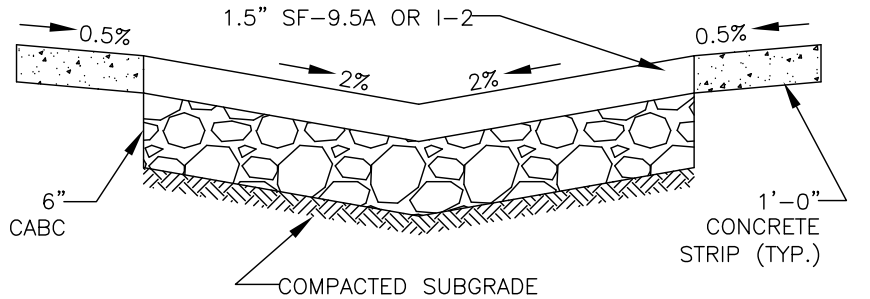

ALLEY WITH INVERSE CROWN

NOTES:

1. SUBGRADE SHALL BE COMPACTED TO PUBLIC STREET STANDARDS.
2. STORM DRAINAGE (NOT SHOWN) SHALL BE PROVIDED AS NECESSARY.
3. ALLEYS SHALL BE CONSIDERED PRIVATE EASEMENTS AND WILL NOT BE ACCEPTED FOR MAINTENANCE BY THE TOWN OF WAXHAW.
4. DRIVEWAYS SHALL BE SEPARATED BY AT LEAST 5 FEET, OR GREATER IF REQUIRED BY PLANNING (LOT SIZE) REQUIREMENTS AND/OR N.C. BUILDING CODE.
5. DETAIL APPLIES TO SINGLE- OR DOUBLE-LOADED ALLEYS. FOR SINGLE-LOADED ALLEYS, THERE SHALL BE A 20-FOOT CLEAR ZONE FREE OF CUT SLOPES, OBSTRUCTIONS, HEDGES, ETC. FROM THE LOADED SIDE EDGE OF PAVEMENT.

* WITH NO PARKING PAD, DIMENSION D3 IS REQUIRED TO BE MINIMUM 5' BUT NO GREATER THAN 7'. WITH PARKING PAD, DIMENSION D4 IS REQUIRED TO BE A MINIMUM OF 20'.

NOT TO SCALE

TOWN OF WAXHAW
LAND DEVELOPMENT STANDARDS

RESIDENTIAL ALLEY DETAIL
ONE-WAY OPERATION

STD. NO.	REV.
280.3	8/19

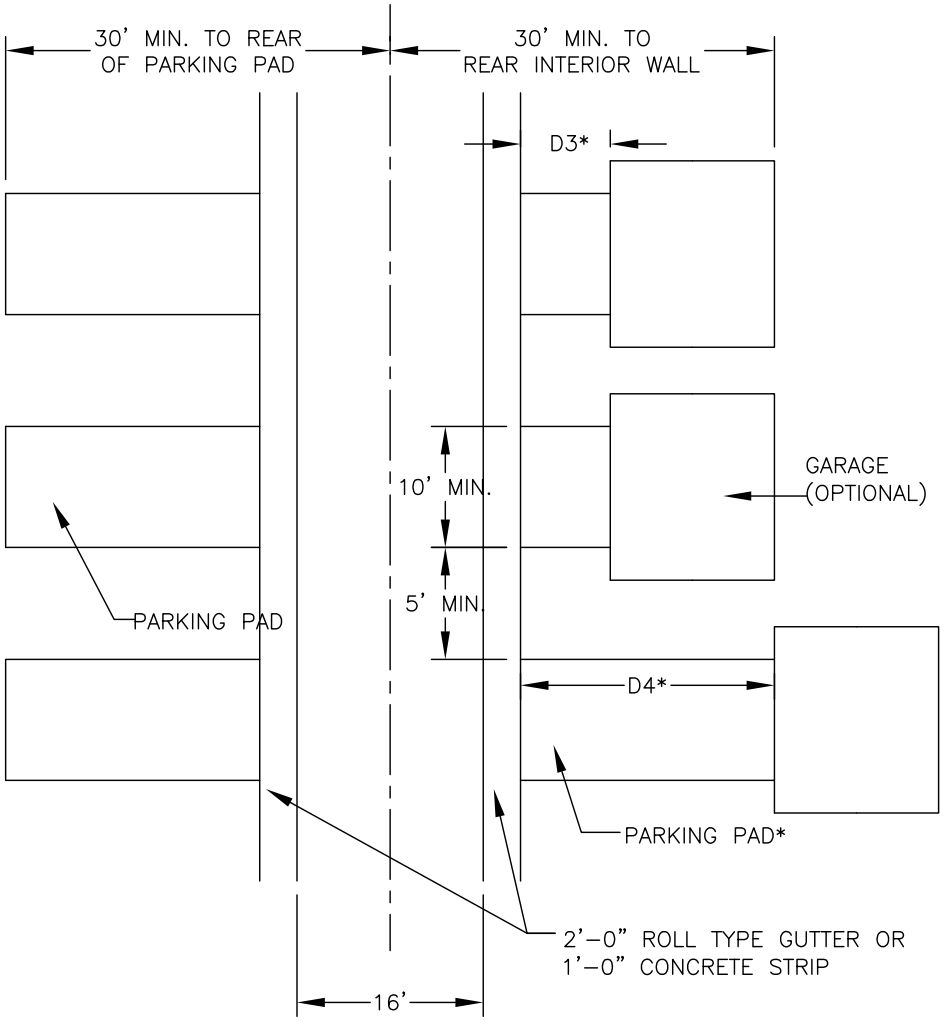

PLAN

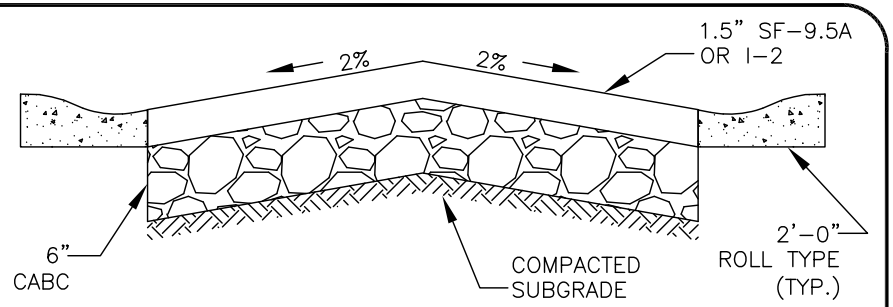

ALLEY WITH NORMAL CROWN

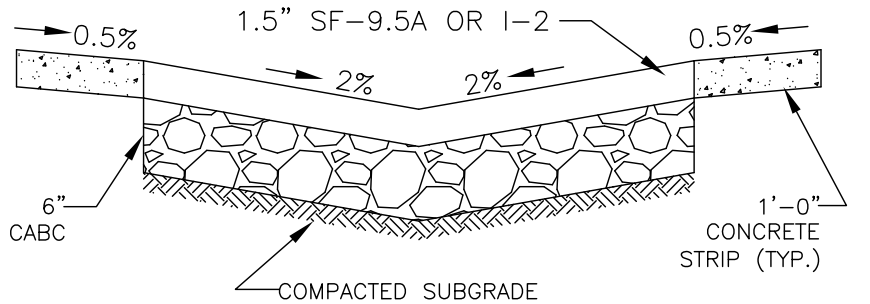

ALLEY WITH INVERSE CROWN

NOTES:

1. SUBGRADE SHALL BE COMPACTED TO PUBLIC STREET STANDARDS.
2. STORM DRAINAGE (NOT SHOWN) SHALL BE PROVIDED AS NECESSARY.
3. ALLEYS SHALL BE CONSIDERED PRIVATE EASEMENTS AND WILL NOT BE ACCEPTED FOR MAINTENANCE BY THE TOWN OF WAXHAW.
4. DRIVEWAYS SHALL BE SEPARATED BY AT LEAST 5 FEET, OR GREATER IF REQUIRED BY PLANNING (LOT SIZE) REQUIREMENTS AND/OR N.C. BUILDING CODE.

* WITH NO PARKING PAD, DIMENSION D3 IS REQUIRED TO BE MINIMUM 5' BUT NO GREATER THAN 7'. WITH PARKING PAD, DIMENSION D4 IS REQUIRED TO BE A MINIMUM OF 20'.

NOT TO SCALE

TOWN OF WAXHAW LAND DEVELOPMENT STANDARDS	RESIDENTIAL ALLEY DETAIL DOUBLE LOADED W/ TWO-WAY OPERATION	STD. NO. 280.4	REV. 8/19

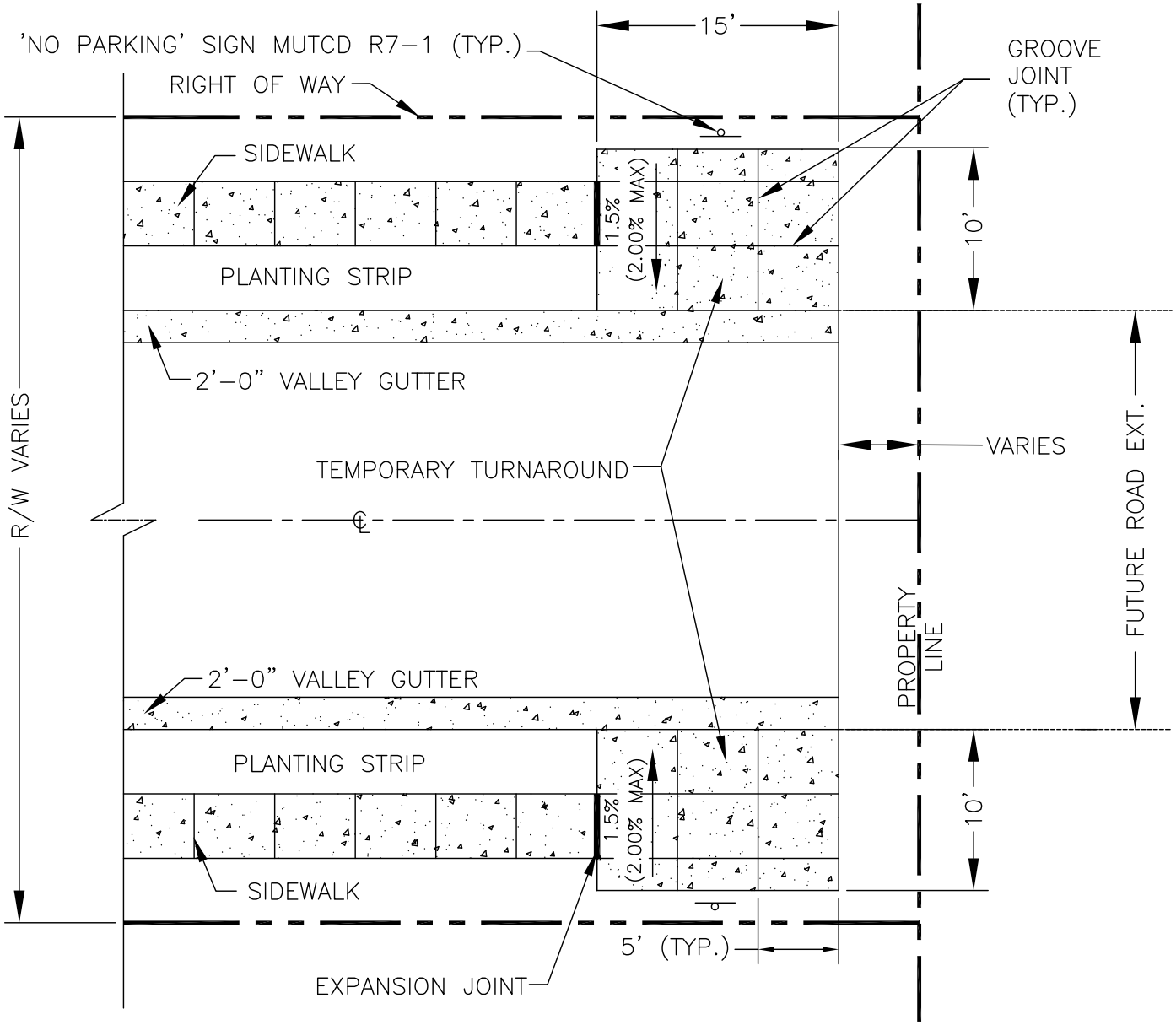

NOTES

1. TEMPORARY TURNAROUND MATERIAL SHALL BE MIN. 3600 PSI CONCRETE, 6" THICK.

2. TEMPORARY INSTALLATION ONLY – TO BE REMOVED WHEN FUTURE DEVELOPMENT CONNECTS TO STREET. "SIDEWALK" PORTION OF TURNAROUND MAY BE LEFT IN PLACE IF NOT DAMAGED.

3. NOT TO BE USED AS A PRIVATE DRIVEWAY.

4. DEAD END STREET BARRICADE AND END OF ROADWAY MARKER PER DETAILS 705.1 THRU 709.1 ARE REQUIRED.

SCALE 1"=10'

TOWN OF WAXHAW LAND DEVELOPMENT STANDARDS	TEMPORARY TURNAROUND LOCAL RESIDENTIAL STREET (OPTIONAL)	STD. NO. 280.5 REV.

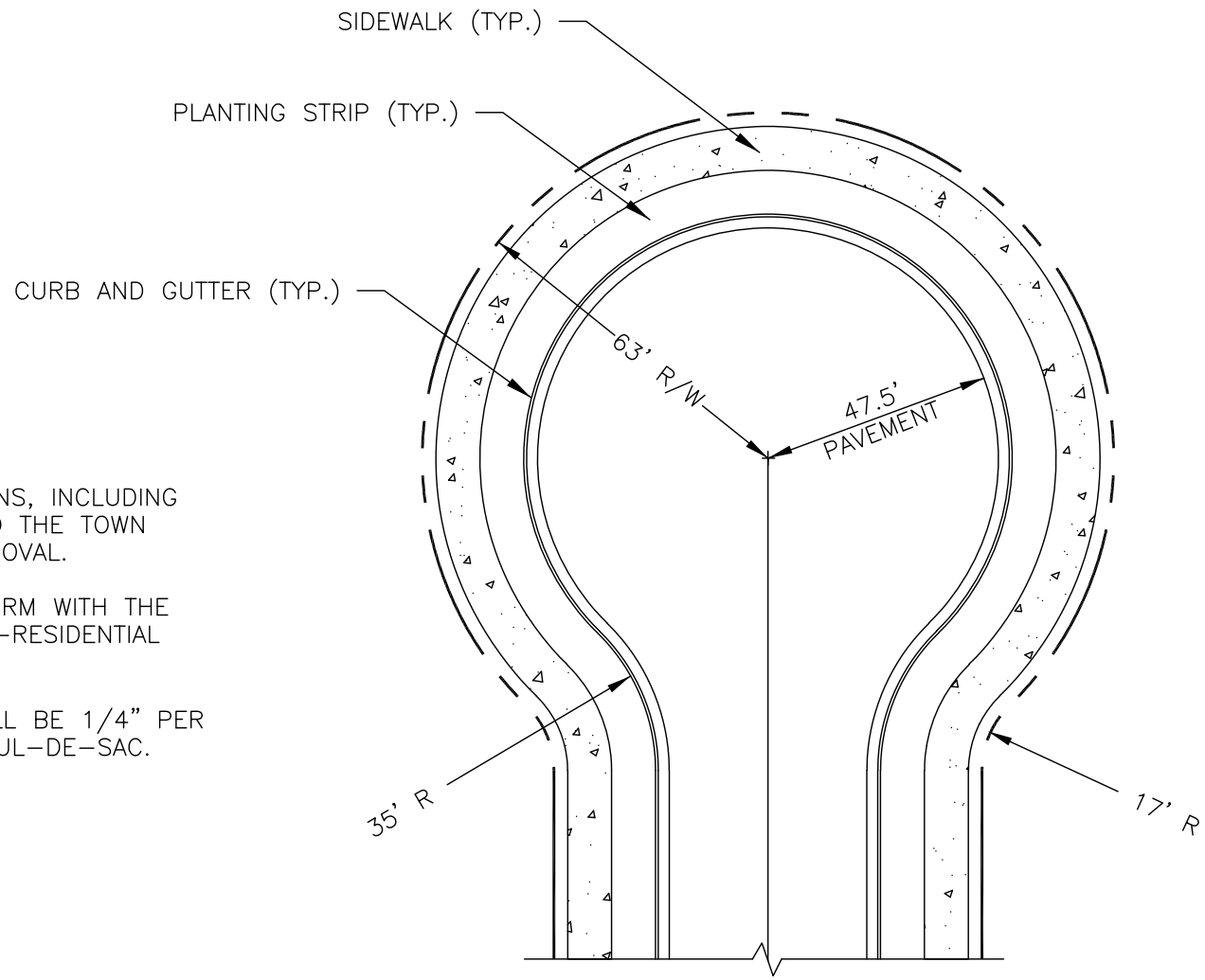

NOTES:

1. ALTERNATIVE CUL-DE-SAC DESIGNS, INCLUDING ISLANDS SHALL BE SUBMITTED TO THE TOWN ENGINEER FOR REVIEW AND APPROVAL.
2. PAVEMENT SECTION SHALL CONFORM WITH THE DESIGN REQUIREMENTS FOR NON-RESIDENTIAL STREETS.
3. THE CROWN FOR PAVEMENT SHALL BE 1/4" PER FT FROM THE CENTER OF THE CUL-DE-SAC.

NOT TO SCALE

	TOWN OF WAXHAW LAND DEVELOPMENT STANDARDS	NON-RESIDENTIAL CUL-DE-SAC DETAIL	STD. NO. 280.6	REV. 8/19

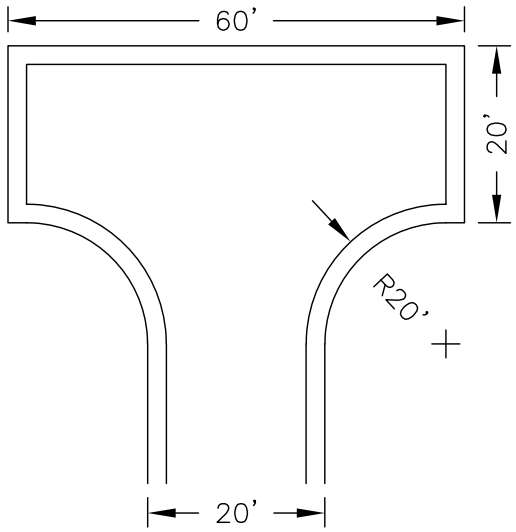

STANDARD HAMMERHEAD

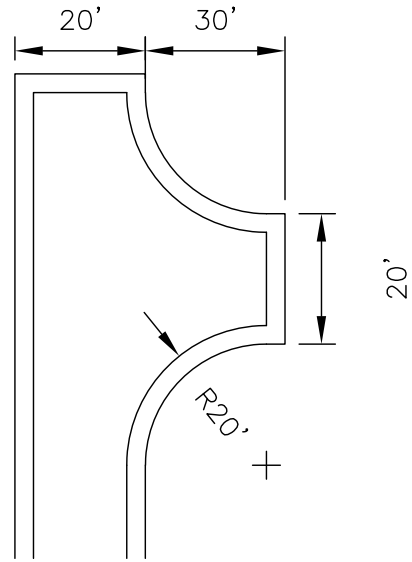

ROTATED HAMMERHEAD

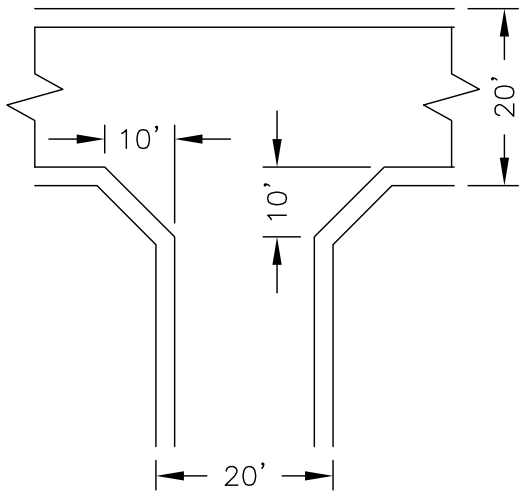

STANDARD INTERSECTION

NOTES:

1. SEE DETAILS 280.3 & 280.4 FOR ALLEY DESIGN STANDARDS.
2. HAMMERHEAD DETAILS APPLY ONLY FOR TWO-WAY ALLEYS. ONE-WAY ALLEYS MUST CONNECT TO A PUBLIC STREET OR ANOTHER ALLEY.
3. FOR INTERSECTIONS WITH A LEAST ONE (1) ONE-WAY ALLEY, THE BACK-OF-CURB TO BACK-OF-CURB WIDTH CAN BE 16 FEET ON THE APPROPRIATE LEG(S) INSTEAD OF THE 20 FEET SHOWN.
4. OTHER INTERSECTION DESIGNS WILL BE APPROVED BY DEVELOPMENT SERVICES ON A CASE-BY-CASE BASIS.
5. THIS DETAIL DOES NOT ACCOMMODATE COMMERCIAL VEHICLES OR FIRE TRUCKS.
6. ADEQUATE STOPPING SIGHT DISTANCE (SSD) SHALL BE PROVIDED AT EACH INTERSECTION. MINIMUM SSD SHALL BE 50 FEET ASSUMING AN OPERATIONAL SPEED OF 10 MPH.

	TOWN OF WAXHAW LAND DEVELOPMENT STANDARDS	RESIDENTIAL ALLEY HAMMERHEADS AND INTERSECTIONS	STD. NO. 280.7 / REV.

NOTES:

1. REFER TO STANDARD DRAWINGS 285.2, 285.3, AND 285.4 FOR ADDITIONAL INFORMATION.
2. PARKING STALLS MAY BE ON ONE OR BOTH SIDES OF THE STREET.
3. PAVEMENT MARKINGS TO BE THERMOPLASTIC ON RETAIL/OFFICE/MIXED-USE STREETS.
4. 30' MINIMUM DISTANCE TO FIRST PARKING STALL TO BE MEASURED FROM END OF INTERSECTION RADIUS POINT.

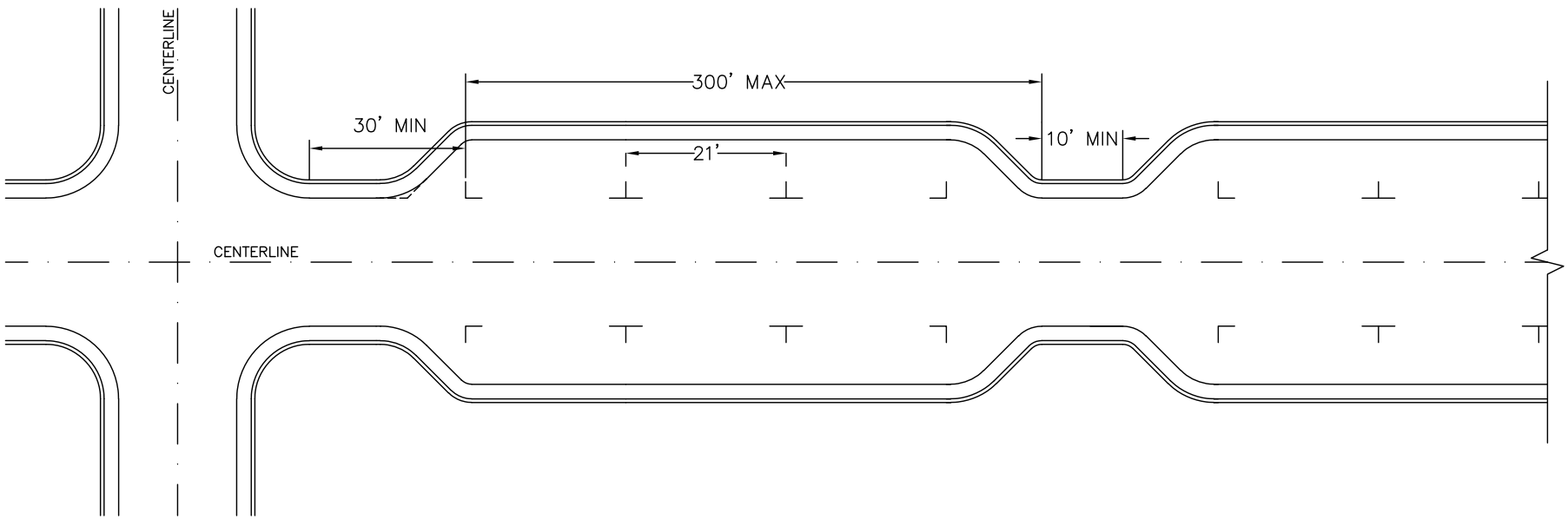

NOT TO SCALE

	TOWN OF WAXHAW LAND DEVELOPMENT STANDARDS	LOCAL STREET PARALLEL PARKING LAYOUT	REV. DATE 3/18/19 STD. NO. 285.1

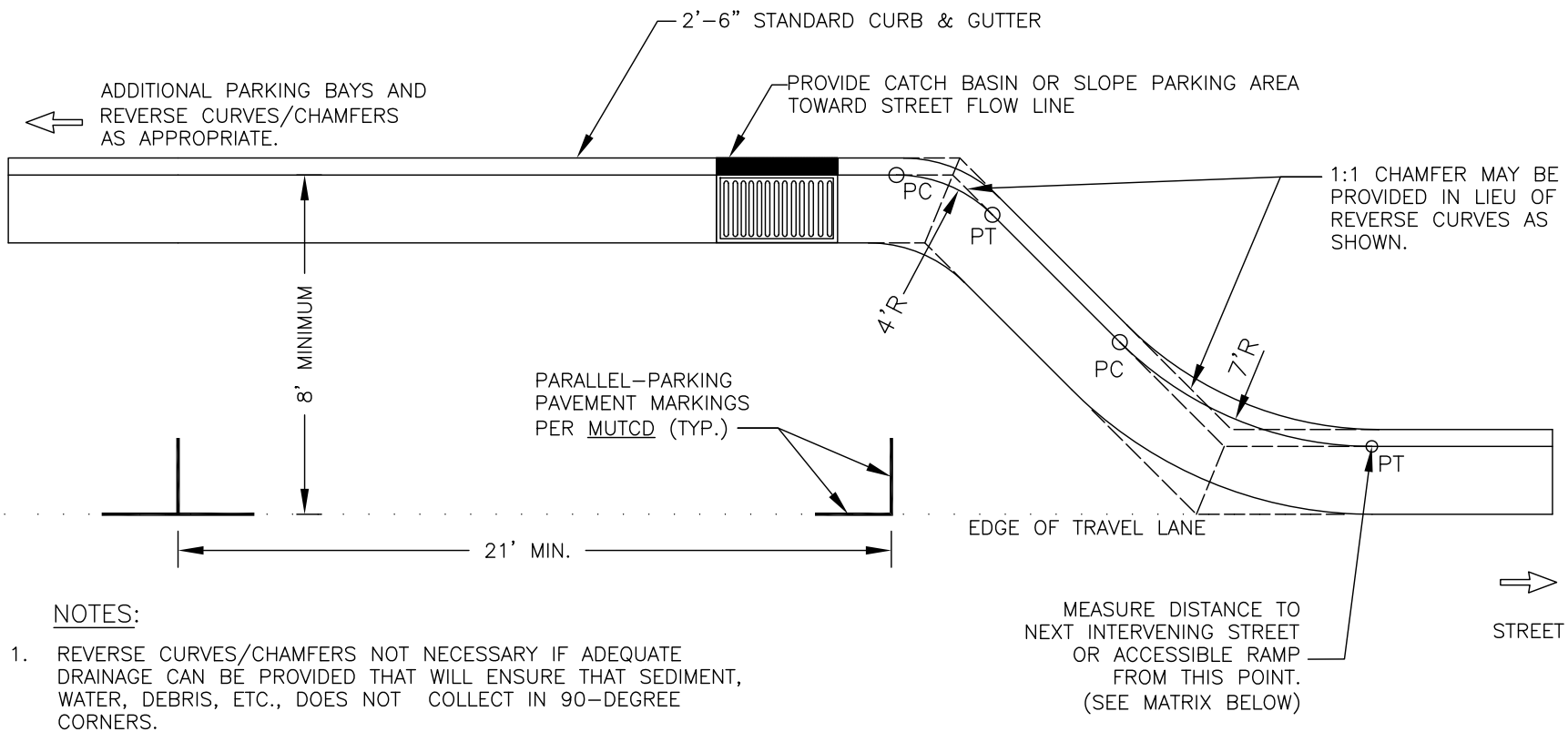

NOTES:

1. REVERSE CURVES/CHAMFERS NOT NECESSARY IF ADEQUATE DRAINAGE CAN BE PROVIDED THAT WILL ENSURE THAT SEDIMENT, WATER, DEBRIS, ETC., DOES NOT COLLECT IN 90–DEGREE CORNERS.

2. FOR PARKING BAYS THAT ARE 8 FEET IN WIDTH OR GREATER, THE PAVEMENT MARKINGS SHALL BE SET AT ONE (1) FOOT LESS THAN THE STALL WIDTH.

3. GREATER SEPARATION FROM INTERVENING STREETS THAN THE DISTANCES PROVIDED IN THE MATRIX MAY BE REQUIRED AT THE TOWN ENGINEER'S DISCRETION.

4. POSITIVE DRAINAGE SHALL BE PROVIDED EITHER BY INSTALLATION OF APPROPRIATE DRAINAGE STRUCTURES OR SLOPE PARKING AREA TO STREET FLOW LINE. SLOPING PARKING AREA TO STREET FLOW LINE ONLY PERMITTED IF ROAD GRADE IS GREATER THAN 2%.

MINIMUM DISTANCE TO NEXT INTERVENING STREET

PARALLEL PARKING BAY LOCATED ON	DRIVEWAY	LOCAL/ COLLECTOR	TH'FARE
LOCAL	20'	20'	20'

NOT TO SCALE

TOWN OF WAXHAW
LAND DEVELOPMENT STANDARDS

PARALLEL PARKING STANDARDS

STD. NO.	REV.
285.2	8/19

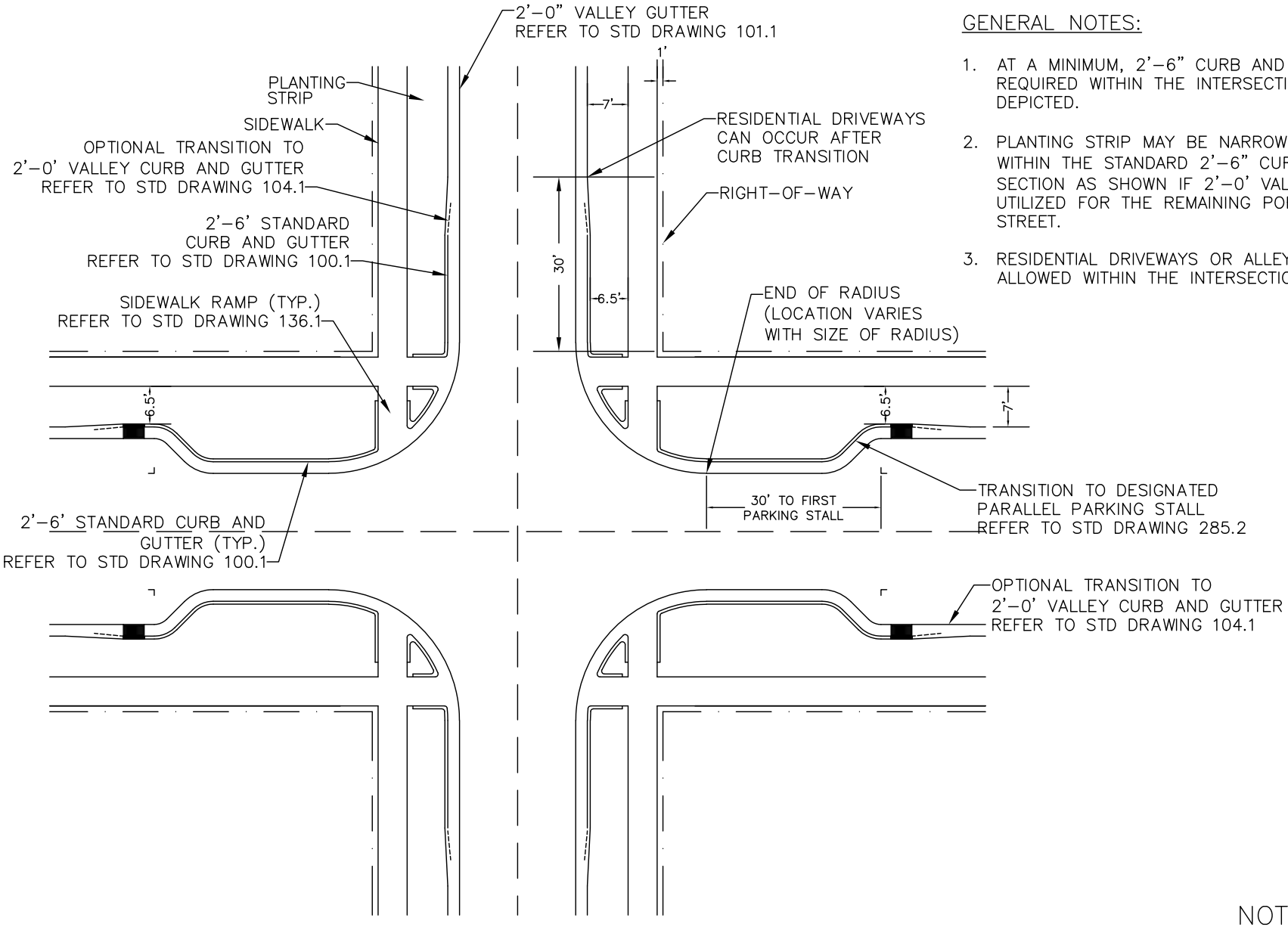

GENERAL NOTES:

1. AT A MINIMUM, 2'-6" CURB AND GUTTER IS REQUIRED WITHIN THE INTERSECTION AS DEPICTED.
2. PLANTING STRIP MAY BE NARROWED TO 6.5' WITHIN THE STANDARD 2'-6" CURB AND GUTTER SECTION AS SHOWN IF 2'-0' VALLEY GUTTER IS UTILIZED FOR THE REMAINING PORTION OF THE STREET.
3. RESIDENTIAL DRIVEWAYS OR ALLEYS ARE NOT ALLOWED WITHIN THE INTERSECTION.

NOT TO SCALE

	TOWN OF WAXHAW LAND DEVELOPMENT STANDARDS	PARKING, SIDEWALK, AND CURB AND GUTTER TRANSITIONS AT RESIDENTIAL INTERSECTIONS	REV. DATE STD. NO. 285.3

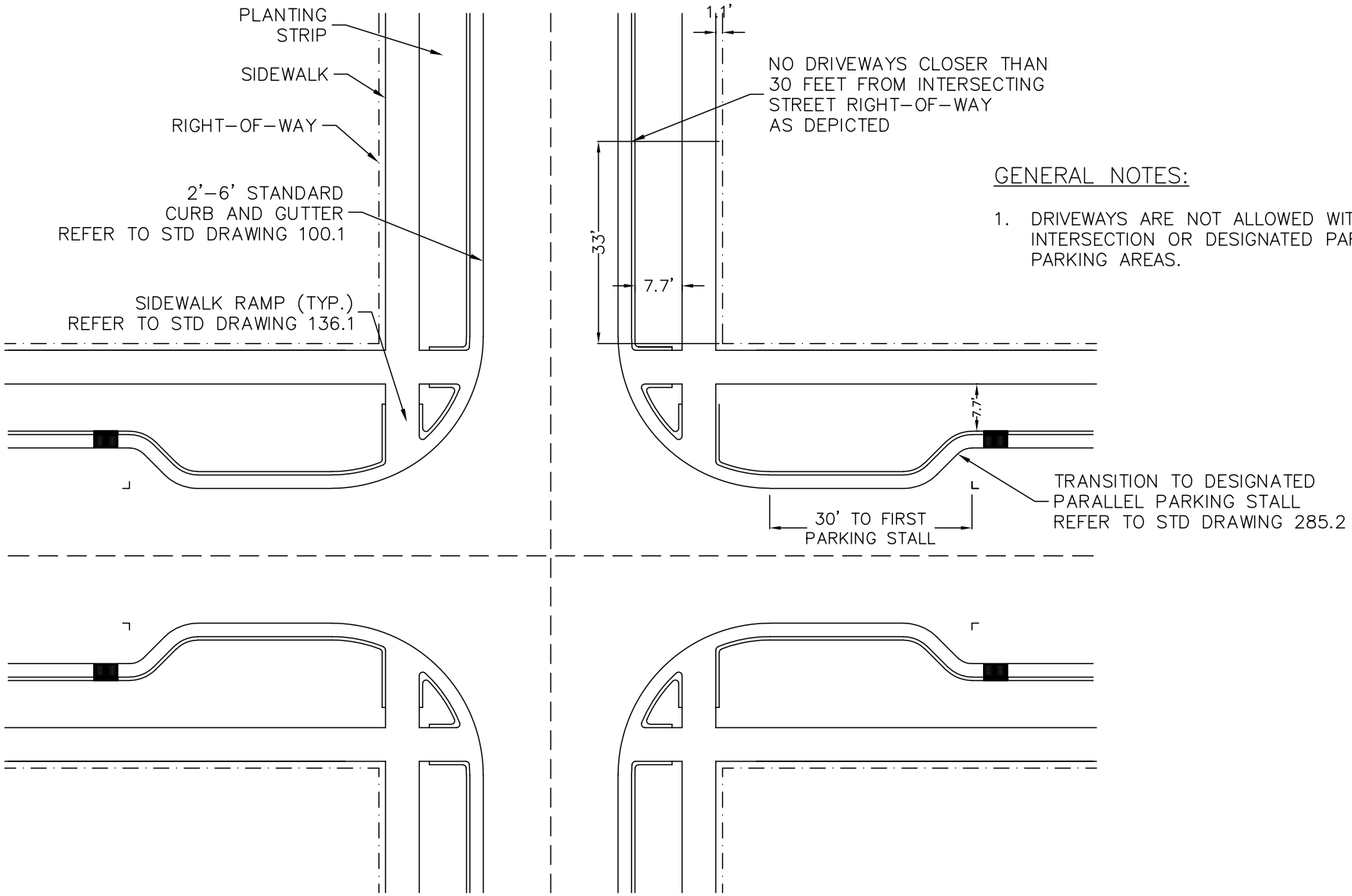

GENERAL NOTES:

1. DRIVEWAYS ARE NOT ALLOWED WITHIN THE INTERSECTION OR DESIGNATED PARALLEL PARKING AREAS.

NOT TO SCALE

	TOWN OF WAXHAW LAND DEVELOPMENT STANDARDS	PARKING, SIDEWALK, AND CURB AND GUTTER TRANSITIONS AT RETAIL/MIXED USE INTERSECTIONS	REV. DATE STD. NO. 285.4

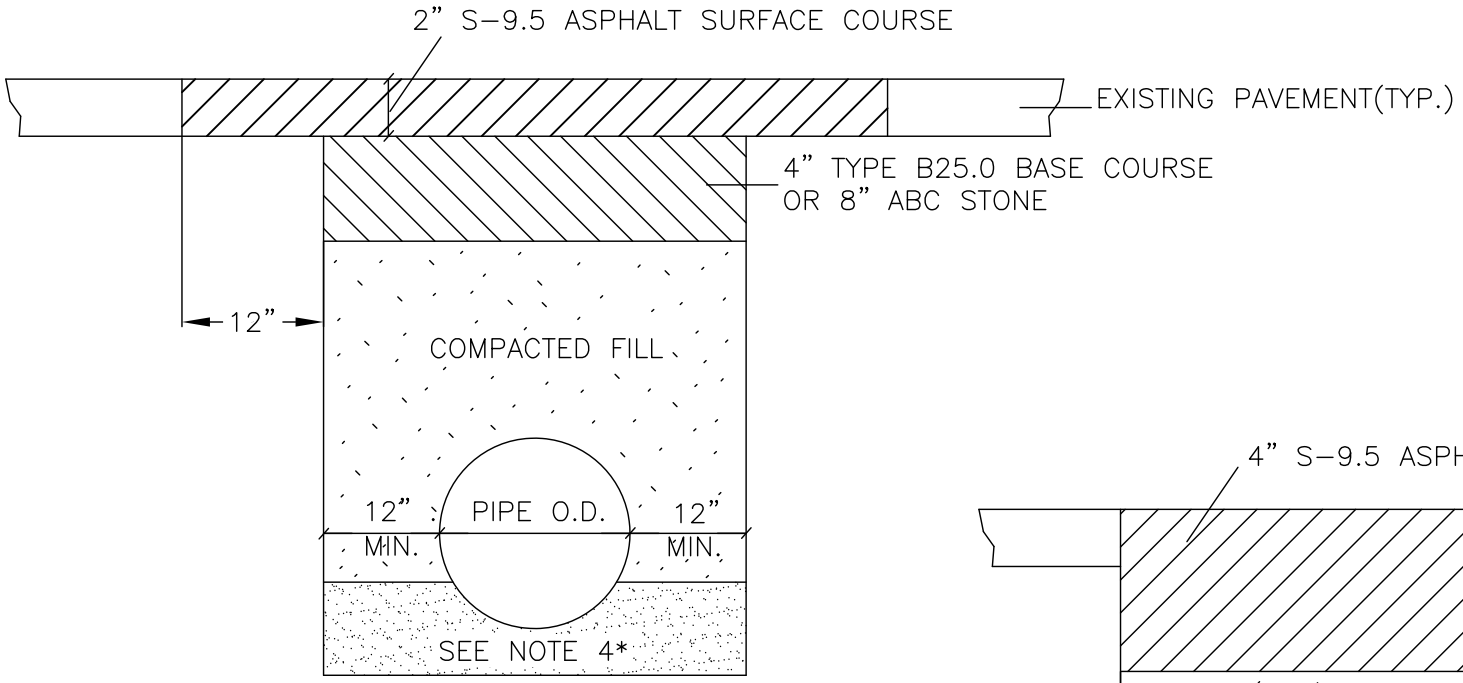

STANDARD REPAIR

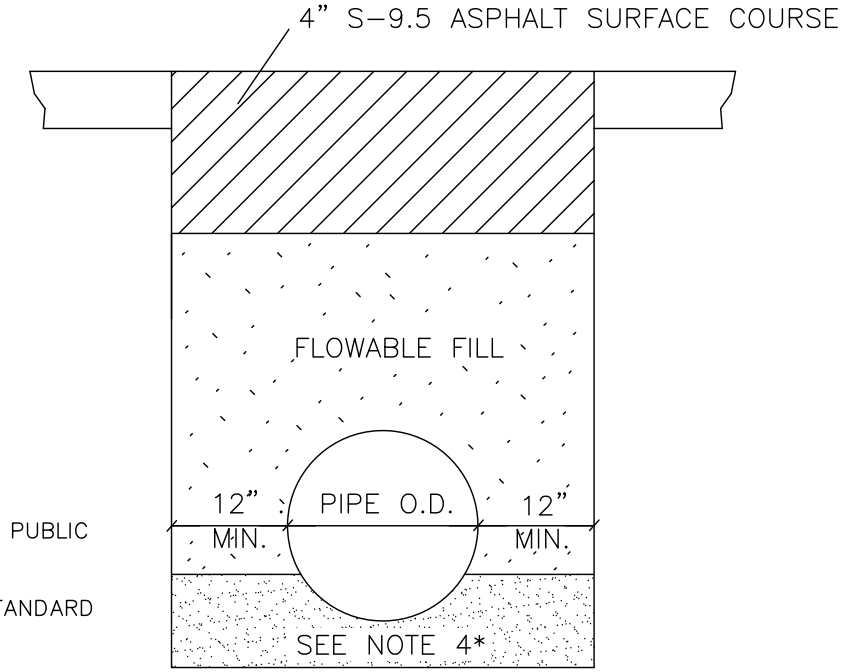

ALTERNATE REPAIR

GENERAL NOTES:

1. AN ENCROACHMENT PERMIT MUST BE OBTAINED PRIOR TO WORKING IN THE PUBLIC RIGHT OF WAY.
2. ALL PAVEMENT SHALL BE SAWCUT.
3. BACKFILL SHALL BE PLACED IN 8" LIFTS MAX, COMPACTED TO 95% PER STANDARD PROCTOR, THE FINAL LIFT SHALL BE 100% COMPACTED.
4. PIPE SHALL BE BEDDED PER MANUFACTURERS SPECIFICATIONS.
5. ASPHALT JOINTS MUST BE TACKED.
6. TRENCH SHALL BE CONSTRUCTED IN ACCORDANCE WITH OSHA REGULATIONS.

NOT TO SCALE

	TOWN OF WAXHAW LAND DEVELOPMENT STANDARDS	FINAL PAVEMENT REPAIR OF UTILITY CUTS TYPICAL SECTION	REV. DATE 8/19 STD. NO. 290.1

GENERAL NOTES

1. AN ENCROACHMENT PERMIT MUST BE OBTAINED PRIOR TO WORKING IN THE PUBLIC RIGHT OF WAY.
2. ALL PAVEMENT SHALL BE SAWCUT.
3. BACKFILL SHALL BE CLEAN, PLACED IN 8" LIFTS MAX, COMPACTED TO 95% PER STANDARD PROCTOR. THE FINAL LIFT SHALL BE 100% COMPACTED.
4. NO TRENCHES SHALL BE LEFT OPEN OVERNIGHT WITHOUT PRIOR APPROVAL FROM THE TOWN ENGINEER OR HIS DESIGNEE.
5. THE FINISHED SURFACE OF THE REPAIR SHALL BE LEVEL WITH, OR NO GREATER THAN ½ INCH ABOVE THE ADJACENT STREET GRADE.
6. PIPE SHALL BE BEDDED PER MANUFACTURERS SPECIFICATIONS.
7. TRENCH SHALL BE CONSTRUCTED IN ACCORDANCE WITH OSHA REGULATIONS.

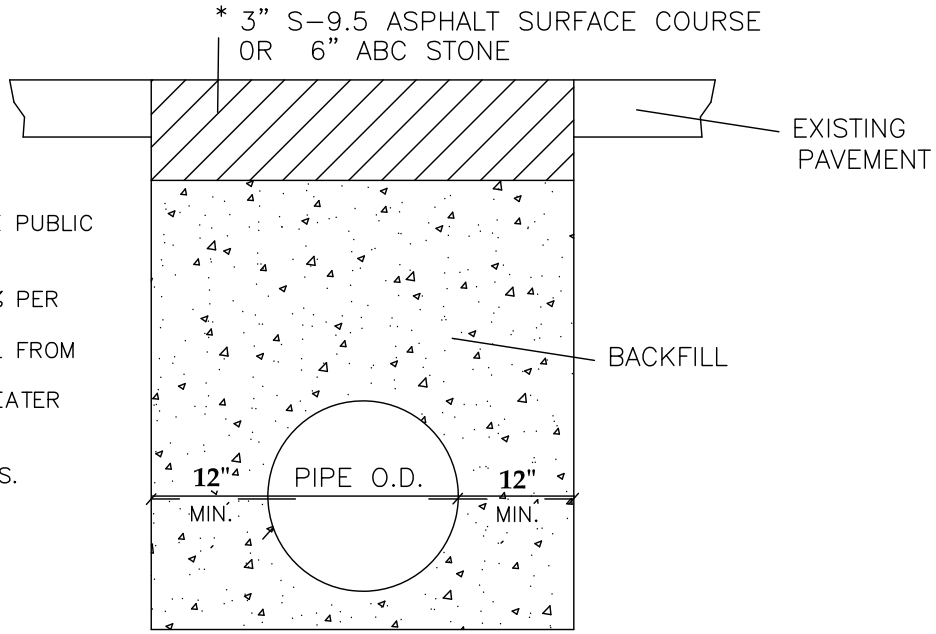

* STONE MAY BE USED FOR TEMPORARY REPAIRS OF LOCAL STREETS FOR A PERIOD NOT TO EXCEED FIVE DAYS. PUBLIC SERVICES SHALL BE NOTIFIED IN ADVANCE AND STONE SHALL BE REFRESHED EACH DAY AS NEEDED.

ASPHALT SHALL BE USED ON ALL NCDOT STREETS, AND FOR TEMPORARY REPAIRS LASTING OVER FIVE DAYS.

UNDER NO CIRCUMSTANCES SHALL TEMPORARY REPAIRS LAST OVER 14 DAYS OR 10 WORK DAYS BEFORE FINAL REPAIR IS COMPLETED.

NOT TO SCALE

	TOWN OF WAXHAW LAND DEVELOPMENT STANDARDS	TEMPORARY PAVEMENT REPAIR OF UTILITY CUTS TYPICAL SECTION	REV. DATE 8/19 STD. NO. 290.2

DWG	SHEET TITLE	SPECIAL REQUIREMENTS AND NOTES
300.01	METHOD OF PIPE INSTALLATION	
310.02	PARALLEL PIPE END SECTION–PRECAST CONCRETE FOR 15" TO 24" PIPE	REQUIRED IN RIGHT OF WAY
310.03	CROSS PIPE END SECTION–PRECAST CONCRETE FOR 18" TO 30" PIPE	REQUIRED IN RIGHT OF WAY
310.10	DRIVEWAY PIPE CONSTRUCTION USING NO SPECIAL END SECTIONS	ONLY AT LOCATIONS APPROVED BY THE TOWN ENGINEER
815.03	PIPE UNDERDRAIN AND BLIND DRAIN	
816.03	GEOCOMPOSITE SHOULDER DRAIN	
838.01	CONCRETE ENDWALL FOR SINGLE AND DOUBLE PIPE CULVERTS	NOTE 1
	15" THRU 48" PIPE 90' SKEW	NOTE 1
838.02	CONCRETE ENDWALL AND SLUICE GATE 15" THRU 36" PIPE–90' SKEW	NOTE 1
838.04	CONCRETE ENDWALL FOR SINGLE AND DOUBLE PIPE CULVERTS	NOTE 1
	17"X13"THRU 71"X47" PIPE ARCH 90' SKEW	NOTE 1
838.05	CONCRETE "L" ENDWALL FOR SINGLE PIPE CULVERTS 15" THRU 48" PIPE	NOTE 1
838.06	CONCRETE "L" ENDWALL FOR SINGLE PIPE CULVERTS 17"X13" THRU 71"X47"	NOTE 1
	71"X47" ARCH PIPE	NOTE 1
838.07	CONCRETE ENDWALL FOR SINGLE AND DOUBLE PIPE CULVERTS	NOTE 1
	40"X31" THRU 66"X51" PIPE ARCH 90'SKEW	NOTE 1
838.08	CONCRETE "L" ENDWALL FOR SINGLE PIPE CULVERTS 40"X32"	NOTE 1
	THRU 66"X51" PIPE ARCH	NOTE 1
838.10	CONCRETE ENDWALL FOR OUTFALL 4'–6" OR 8" PIPE	NOTE 1
838.11	BRICK ENDWALL FOR SINGLE AND DOUBLE PIPE CULVERTS	NOTE 1
	15" THRU 48" 90' SKEW	NOTE 1
838.14	BRICK ENDWALL FOR SINGLE AND DOUBLE PIPE CULVERTS 17"X31"	NOTE 1
	THRU 71"X47" 90' SKEW	NOTE 1
838.15	BRICK "L" ENDWALL FOR SINGLE PIPE CULVERTS 15" THRU 48" PIPE	NOTE 1
838.16	BRICK "L" ENDWALL FOR SINGLE PIPE CULVERTS 17"X13" THRU	NOTE 1
	71"X47" PIPE ARCH	NOTE 1
838.17	BRICK ENDWALL FOR SINGLE AND DOUBLE PIPE CULVERTS 40"X31"	NOTE 1
	THRU 66"X51" PIPE ARCH 90'SKEW	NOTE 1
838.18	BRICK ENDWALL FOR SINGLE PIPE CULVERTS 40"X31" THRU	NOTE 1
	66"X51" PIPE ARCH 90' SKEW	NOTE 1
838.20	BRICK ENDWALL FOR OUTFALL 4", 6" AND 8" PIPE	NOTE 1
838.21	REINFORCED CONCRETE ENDWALL FOR SINGLE 54" PIPE 90' SKEW	NOTE 1 SEE 304.1 & 305.1, THIS SECTION FOR SPLASH PAD
838.22	REINFORCED CONCRETE ENDWALL FOR DOUBLE & TRIPLE 54" PIPE 90' SKEW	NOTE 1 SEE 304.1 & 305.1, THIS SECTION FOR SPLASH PAD
838.27	REINFORCED CONCRETE ENDWALL FOR SINGLE 60" PIPE 90' SKEW	NOTE 1 SEE 304.1 & 305.1, THIS SECTION FOR SPLASH PAD
838.28	REINFORCED CONCRETE ENDWALL FOR DOUBLE & TRIPLE 60" PIPE 90' SKEW	NOTE 1 SEE 304.1 & 305.1, THIS SECTION FOR SPLASH PAD
838.33	REINFORCED CONCRETE ENDWALL FOR SINGLE 66" PIPE 90' SKEW	NOTE 1 SEE 304.1 & 305.1, THIS SECTION FOR SPLASH PAD
838.34	REINFORCED CONCRETE ENDWALL FOR DOUBLE & TRIPLE 66" PIPE 90' SKEW	NOTE 1 SEE 304.1 & 305.1, THIS SECTION FOR SPLASH PAD
838.39	REINFORCED CONCRETE ENDWALL FOR SINGLE 72" PIPE 90' SKEW	NOTE 1 SEE 304.1 & 305.1, THIS SECTION FOR SPLASH PAD
838.40	REINFORCED CONCRETE ENDWALL FOR DOUBLE & TRIPLE 72" PIPE 90' SKEW	NOTE 1 SEE 304.1 & 305.1, THIS SECTION FOR SPLASH PAD

NOTE 1: FOR ALL STRUCTURES – NCDOT REQUIRES CLASS B CONCRETE (2500PSI). THE TOWN REQUIRES 3600 PSI CONCRETE STRENGTH @ 28 DAYS. 3600 PSI CONCRETE SHALL BE USED IN ALL TOWN PROJECTS.

DWG	SHEET TITLE	SPECIAL REQUIREMENTS AND NOTES
838.45	NOTES FOR REINFORCED CONCRETE ENDWALL STANDARD DRAWINGS	NOTE 1 SEE 304.1 & 305.1, THIS SECTION FOR SPLASH PAD
	838.21 THRU 838.40	NOTE 1 SEE 304.1 & 305.1, THIS SECTION FOR SPLASH PAD
838.51	REINFORCED BRICK ENDWALL FOR SINGLE 54" PIPE 90' SKEW	NOTE 1 SEE 304.1 & 305.1, THIS SECTION FOR SPLASH PAD
838.52	REINFORCED BRICK ENDWALL FOR DOUBLE & TRIPLE 54" PIPE 90'SKEW	NOTE 1 SEE 304.1 & 305.1, THIS SECTION FOR SPLASH PAD
838.57	REINFORCED BRICK ENDWALL FOR SINGLE 60" PIPE 90' SKEW	NOTE 1 SEE 304.1 & 305.1, THIS SECTION FOR SPLASH PAD
838.58	REINFORCED BRICK ENDWALL FOR DOUBLE & TRIPLE 60" PIPE 90' SKEW	NOTE 1 SEE 304.1 & 305.1, THIS SECTION FOR SPLASH PAD
838.63	REINFORCED BRICK ENDWALL FOR SINGLE 66" PIPE 90' SKEW	NOTE 1 SEE 304.1 & 305.1, THIS SECTION FOR SPLASH PAD
838.64	REINFORCED BRICK ENDWALL FOR DOUBLE & TRIPLE 66" PIPE 90' SKEW	NOTE 1 SEE 304.1 & 305.1, THIS SECTION FOR SPLASH PAD
838.69	REINFORCED BRICK ENDWALL FOR SINGLE 72" PIPE 90' SKEW	NOTE 1 SEE 304.1 & 305.1, THIS SECTION FOR SPLASH PAD
838.70	REINFORCED BRICK ENDWALL FOR DOUBLE & TRIPLE 72" PIPE 90' SKEW	NOTE 1 SEE 304.1 & 305.1, THIS SECTION FOR SPLASH PAD
838.75	NOTES FOR REINFORCED BRICK ENDWALL STANDARD DRAWINGS 838.51 THRU 838.70	NOTE 1 SEE 304.1 & 305.1, THIS SECTION FOR SPLASH PAD
838.80	PRECAST CONCRETE ENDWALL FOR SINGLE 12" THRU 72" PIPE 90' SKEW	
840.00	CONCRETE BASE PAD FOR DRAINAGE STRUCTURES	
840.01	BRICK CATCH BASIN 15" THRU 54" PIPE	
840.02	CONCRETE CATCH BASIN 12" THRU 54" PIPE	
840.03	FRAME, GRATE BASIN 12" THRU 54" PIPE	TYPE F AND G GRATES ARE OPTIONAL WITHIN THE TOWN LIMITS
840.04	CONCRETE OPEN THROAT CATCH BASIN 12" THRU 48" PIPE	NOTE 1; OPENINGS PERMITTED IN 4 SIDES OUTSIDE OF STREET R/W MANHOLE RING AND COVER REQUIRED IN TOP SLAB
840.05	BRICK OPEN THROAT CATCH BASIN 15" THRU 48" PIPE	NOTE 1; OPENINGS PERMITTED IN 4 SIDES OUTSIDE OF STREET R/W MANHOLE RING AND COVER REQUIRED IN TOP SLAB
840.14	CONCRETE DROP INLET 12" THRU 30" PIPE	NOTE 1
840.15	BRICK DROP INLET 12" THRU 30' PIPE	NOTE 1
840.16	DROP INLET FRAME AND GRATE FOR USE WITH DWGS. 840.14 & 840.15	NOTE 1
840.17	CONCRETE GRATED DROP INLET TYPE "A" 12" THRU 72" PIPE	NOTE 1
840.18	CONCRETE GRATED DROP INLET TYPE "B" 12" THRU 36" PIPE	NOTE 1
840.19	CONCRETE GRATED DROP INLET TYPE "D" 12" THRU 36" PIPE	NOTE 1
840.20	FRAMES AND WIDE SLOT FLAT GRATES	NOT FOR USE IN PEDESTRIAN AREAS
840.22	FRAMES AND WIDE SLOT SAG GRATES	NOT FOR USE IN PEDESTRIAN AREAS
840.24	FRAMES AND NARROW SLOT SAG GRATES	
840.25	ANCHORAGE FOR FRAMES BRICK OR CONCRETE	
840.26	BRICK GRATED DROP INLET TYPE "A" 12" THRU 72" PIPE	
840.27	BRICK GRATED DROP INLET TYPE "B" 12" THRU 36" PIPE	
840.28	BRICK GRATED DROP INLET TYPE "D" 12" THRU 36" PIPE	
840.29	FRAMES AND NARROW SLOT FLAT GRATES	
840.30	DRIVEWAY DROP INLET	

NOTE 1: FOR ALL STRUCTURES – NCDOT REQUIRES CLASS B CONCRETE (2500PSI). THE TOWN REQUIRES 3600 PSI CONCRETE STRENGTH @ 28 DAYS. 3600 PSI CONCRETE SHALL BE USED IN ALL TOWN PROJECTS.

DWG	SHEET TITLE	SPECIAL REQUIREMENTS AND NOTES
840.31	CONCRETE JUNCTION BOX (WITH OPTIONAL MANHOLE) 12" THRU 66" PIPE	NOTE 1; OPTIONAL MANHOLE IS REQUIRED
840.32	BRICK JUNCTION BOX 12" THRU 66" PIPE	NOTE 1; OPTIONAL MANHOLE IS REQUIRED
840.34	TRAFFIC BEARING JUNCTION BOX FOR USE WITH PIPES 42" AND UNDER	NOTE 1; OPTIONAL MANHOLE IS REQUIRED; AS MEASURED FROM BOTTOM OF TOP SLAB -- FOR JUNCTION BOX HEIGHT 0'-4'8" USE 8" THICK WALL, FROM 4'8" HEIGHT TO 10' HEIGHT, USE 12" THICK WALL. IF PROPOSED STRUCTURE EXCEEDS 12'-0" HEIGHT A SPECIAL DESIGN WILL BE REQUIRED
840.35	TRAFFIC BEARING DROP INLET FOR CAST IRON DOUBLE FRAME AND GRATES	
840.36	TRAFFIC BEARING DROP INLET FOR STEEL (840.37) DOUBLE FRAME AND GRATES	NOT FOR USE IN PEDESTRIAN AREAS
840.37	STEEL GRATE AND FRAME	NOT FOR USE IN PEDESTRIAN AREAS
840.41	SPRING BOX CONCRETE OR BRICK	
840.45	PRECAST DRAINAGE STRUCTURE (SOLID AND WAFFLE WALL)	WAFFLE WALL IS NOT PERMITTED IN ROADWAY, PLANTING STRIPS, OR MEDIANS. ALL OPENINGS SHALL BE PRE-CAST
840.46	TRAFFIC BEARING PRECAST DRAINAGE STRUCTURE	
840.51	BRICK MANHOLE 12" 36" PIPE	
840.52	PRECAST MANHOLE 4', 5' AND 6' DIAMETER 12" THRU 42" PIPE	
840.53	PRECAST MANHOLE WITH MASONRY BASE 12" THRU 42" PIPE	
840.54	MANHOLE FRAME AND COVER	
840.60	DRAINAGE STRUCTURE STEPS	
840.71	CONCRETE PAVED DITCHES	
840.72	PIPE COLLAR	
850.01	CONCRETE PAVED DITCHES	
852.04	METHODS FOR PLACEMENT OF DROP INLETS IN GRASSED MEDIAN (USING 1'-6" CURB AND GUTTER)	
852.05	MEDIAN CURB FOR CATCH BASIN (FOR USE WITH 1'-6" CURB AND GUTTER)	
852.06	METHOD OF PLACEMENT OF DROP INLETS IN CONCRETE ISLANDS	
876.01	RIP RAP IN CHANNELS	
876.03	DRAINAGE DITCHES WITH CLASS "A" RIP RAP	
876.04	DRAINAGE DITCHES WITH CLASS "B" RIP RAP	
310.01	1998 DRAWINGS CONCRETE FLARED END SECTION	

NOTE 1: FOR ALL STRUCTURES - NCDOT REQUIRES CLASS B CONCRETE (2500PSI). THE TOWN REQUIRES 3600 PSI CONCRETE STRENGTH @ 28 DAYS. 3600 PSI CONCRETE SHALL BE USED IN ALL TOWN PROJECTS.

GENERAL NOTES:

1. SEE NCDOT STANDARD 840.01 FOR DETAILS BASED ON PIPE SIZE PER CROSS SECTION.
2. CONSTRUCT TWO SINGLE BASINS PER NCDOT STANDARD WITH DOUBLE INTERIOR WALL.
3. ALL CONCRETE TO BE 3600 P.S.I COMPRESSIVE STRENGTH.
4. BASE SLAB SHALL BE MONOLITHIC.
5. SEE STANDARDS 121.1 AND 122.1 FOR PLACEMENT OF CATCH BASIN.
6. PIPE SECTION D2 CONNECTING CATCH BASINS SHALL HAVE A MINIMUM DIAMETER SAME AS OF OUTLET PIPE D3.
7. ALL REINFORCING STEEL SHOWN ON NCDOT STANDARDS IS TO BE PROVIDED AS CONTINUOUS MEMBERS. (NO LAPS, USED AS A SINGLE CONTINUOUS BAR IN THE SLAB)
8. WEEP HOLES SHALL BE PLACED IN BACK WALL WITH FILTER FABRIC OR STONE ON BACK SIDE

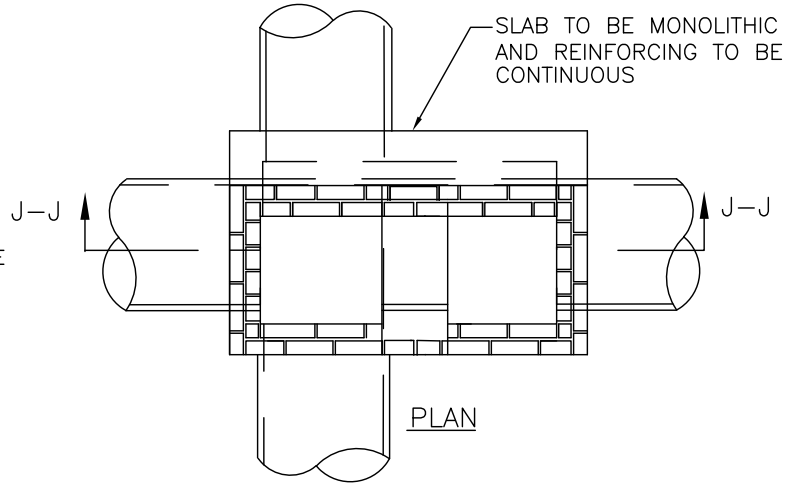

PLAN

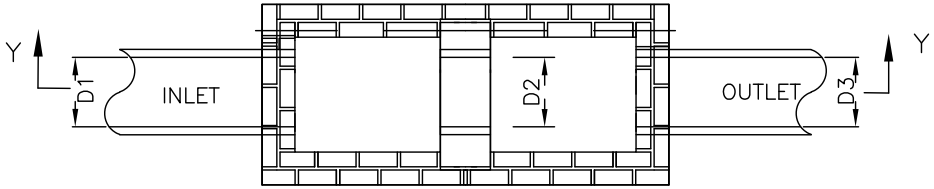

PLAN

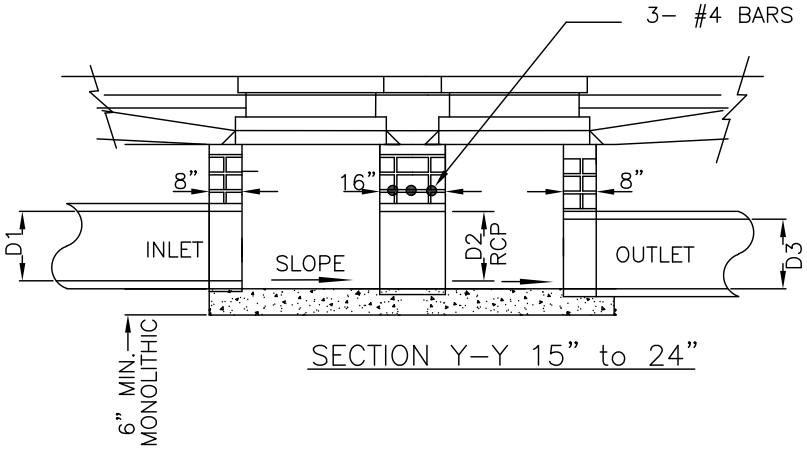

SECTION Y–Y 15" to 24"

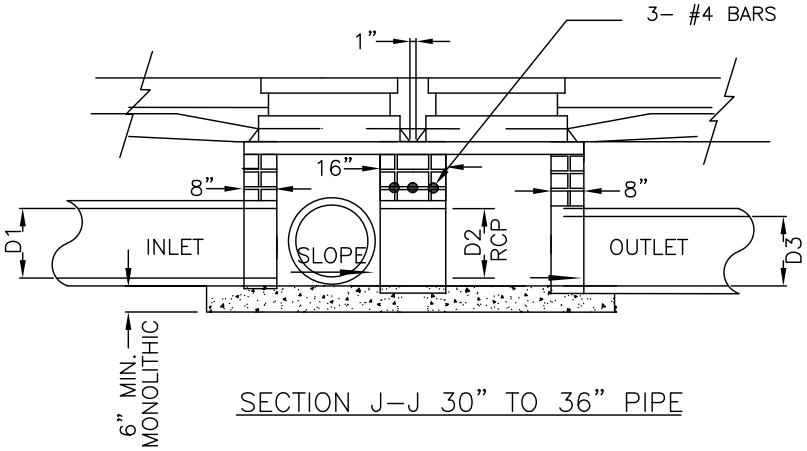

SECTION J–J 30" TO 36" PIPE

NOT TO SCALE

	TOWN OF WAXHAW LAND DEVELOPMENT STANDARDS	BRICK DOUBLE CATCH BASIN 15" THRU 36" PIPE

STD. NO.	REV.
303.1	

CONCRETE PIPE			DIMENSIONS									
WALL THK.	OUT DIA.	IN DIA.	H	A	B	C	E	F	G	W	K	M
2 1/4"	19 1/2"	15"	27 1/2"	20"	24"	8"	7 1/2"	4"	4"	8"	17"	10"
2 1/2"	23"	18"	31"	20"	24"	8"	9"	4"	4"	8"	17"	12"
3"	30"	24"	38"	20"	30"	8"	12"	4"	4"	8"	21"	15"
3 1/2"	37"	30"	45"	20"	44"	12"	15"	6"	8"	8"	31"	18"
4"	44"	36"	52"	32"	44"	12"	18"	6"	8"	8"	31"	22"
4 1/2"	51"	42"	59"	32"	48"	12"	21"	6"	8"	8"	34"	26"
5"	58"	48"	66"	32"	48"	12"	24"	6"	8"	8"	34"	29"
5 1/2"	65"	54"	73"	32"	54"	12"	27"	6"	8"	8"	38"	33"
6"	72"	60"	80"	36"	66"	12"	30"	8"	12"	12"	46"	36"
6 1/2"	79"	66"	87"	36"	72"	12"	33"	8"	12"	12"	51"	40"
7"	86"	72"	94"	36"	78"	12"	36"	8"	12"	12"	56"	43"

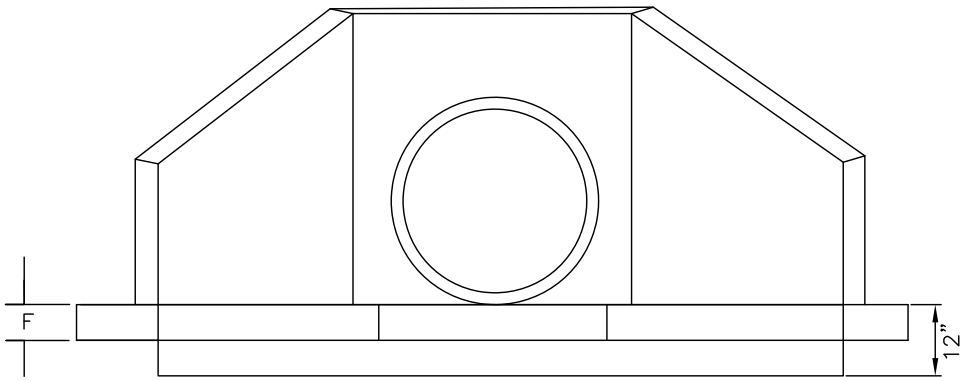

FRONT VIEW

REINFORCING

DIA.	"C" BAR		"D" BAR	
	NO.	LGT.	NO.	LGT.
15"	4	2'-0"	4	1'-11"
18"	4	2'-3"	4	2'-2"
24"	4	2'-9"	4	2'-8"
30"	4	3'-3"	4	3'-2"
36"	4	3'-9"	4	3'-8"
42"	4	4'-3"	4	4'-2"
48"	4	4'-9"	4	4'-8"
54"	4	5'-3"	4	5'-2"
60"	4	5'-9"	4	5'-8"
66"	4	6'-3"	4	6'-2"
72"	4	6'-9"	4	6'-8"

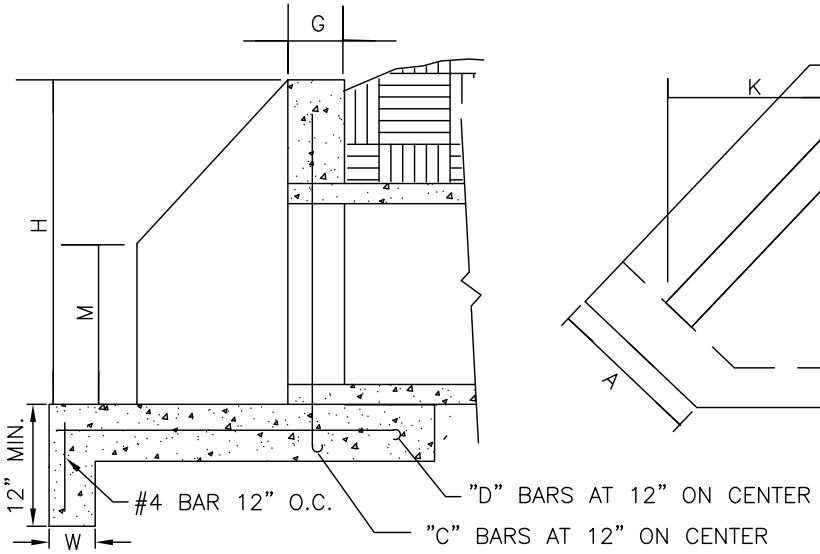

SIDE VIEW

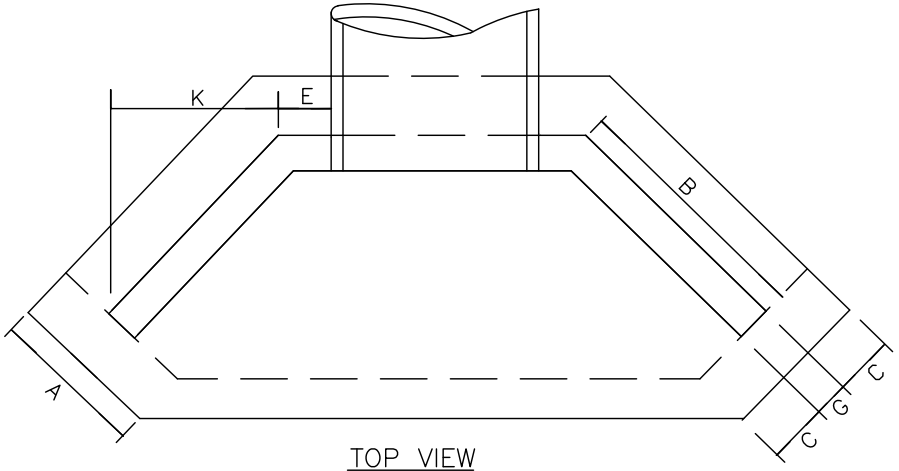

TOP VIEW

NOT TO SCALE

TOWN OF WAXHAW
LAND DEVELOPMENT STANDARDS

CONCRETE WINGWALL WITH SPLASH PAD

STD. NO.	REV.
304.1	

GENERAL NOTES:

1. ALL CORNERS TO BE CHAMFERED 1" IF CONCRETE.
2. THE CONTRACTOR WILL BE REQUIRED TO PLACE 2-#6 BARS "Y" IN THE TOP OF ALL ENDWALL FOR PIPE CULVERTS 42" AND OVER WITH A MINIMUM 3" COVER AND A LENGTH OF 6" LESS THAN ENDWALL.
3. FORMS ARE TO BE USED FOR THE CONSTRUCTION OF THE BOTTOM SLAB.
4. WALL THICKNESS (T) SHOWN IS NOT TO BE INTERPRETED TO MEAN THE THICKNESS ACCEPTABLE, BUT IS USED ONLY IN COMPUTING ENDWALL QUANTITIES.
5. IF CONTRACTOR ELECTS TO USE CONSTRUCTION JOINT AT BOTTOM OF PIPE, AND POURS BASE SEPARATELY, THE TOP OF BASE SHALL BE LEFT ROUGH.
6. ALL CONCRETE TO BE 3600 P.S.I COMPRESSIVE STRENGTH.

NOT TO SCALE

	TOWN OF WAXHAW LAND DEVELOPMENT STANDARDS	CONCRETE WINGWALL WITH SPLASH PAD	STD. NO. 305.1 / REV.

NOTES:

1. CLASS OR MEDIAN SIZE OF RIPRAP AND LENGTH, WIDTH AND DEPTH OF APRON TO BE DESIGNED BY THE ENGINEER.
2. REFER TO THE TOWN OF WAXHAW STORM WATER DESIGN MANUAL FOR RIPRAP APRON DESIGN STANDARDS.
3. RIPRAP SHOULD EXTEND UP BOTH SIDES OF THE APRON AND AROUND THE END OF THE PIPE OR CULVERT AT THE DISCHARGE OUTLET AT A MAXIMUM SLOPE OF 2:1 AND A HEIGHT NOT LESS THAN TWO THIRDS THE PIPE DIAMETER OR CULVERT HEIGHT.
4. THERE SHALL BE NO OVERFLOW FROM THE END OF THE APRON TO THE SURFACE OF THE RECEIVING CHANNEL. THE AREA TO BE PAVED OR RIPRAPPED SHALL BE UNDERCUT SO THAT THE INVERT OF THE APRON SHALL BE AT THE SAME GRADE (FLUSH) WITH THE SURFACE OF THE RECEIVING CHANNEL. THE APRON SHALL HAVE A CUTOFF OR TOE WALL AT THE DOWNSTREAM END.
5. THE WIDTH OF THE END OF THE APRON SHALL BE EQUAL TO THE BOTTOM WIDTH OF THE RECEIVING CHANNEL. MAXIMUM TAPER TO RECEIVING CHANNEL 5:1
6. ALL SUBGRADE FOR STRUCTURE TO BE COMPACTED TO 95% OR GREATER.
7. THE PLACING OF FILL, EITHER LOOSE OR COMPACTED IN THE RECEIVING CHANNEL SHALL NOT BE ALLOWED.
8. NO BENDS OR CURVES IN THE HORIZONTAL ALIGNMENT OF THE APRON WILL BE PERMITTED.
9. FILTER FABRIC SHALL BE INSTALLED ON COMPACTED SUBGRADE PRIOR TO PLACEMENT OF RIP RAP.
10. ANY DISTURBED AREA FROM END OF APRON TO RECIEVING CHANNEL MUST BE STABILIZED.

USE USDA NOMOGRAPH FROM NC SEDIMENT AND EROSION CONTROL MANUAL OR THE TOWN OF WAXHAW STORM WATER DESIGN MANUAL FOR DESIGN DATA.

OUTLET	La	W1	W2	*T	H

* d50 (see fig 8.06 a&b "NC SEDIMENT AND EROSION CONTROL MANUAL"
dmax = 1.5 x d50
T = 1.5 X dmax.
T(min.)=10"

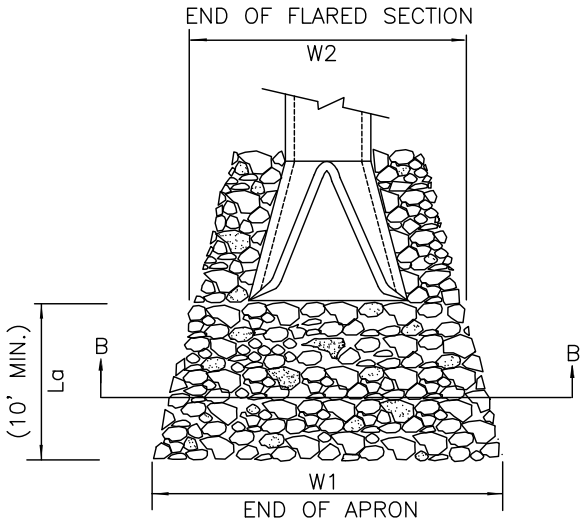

PLAN

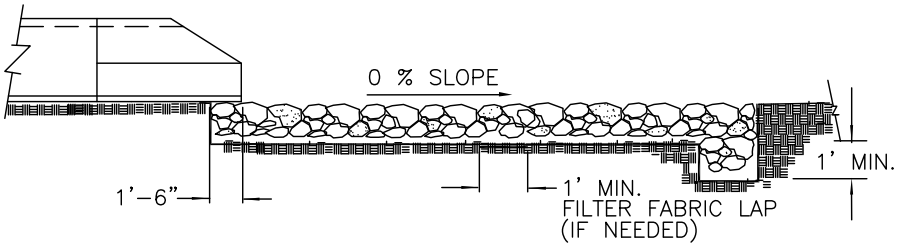

ELEVATION

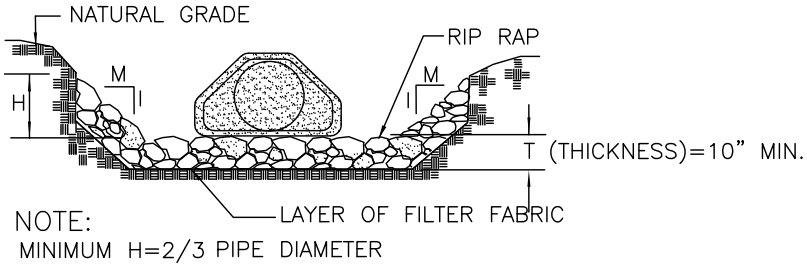

NOTE:
MINIMUM H=2/3 PIPE DIAMETER

SECTION B-B

TOWN OF WAXHAW LAND DEVELOPMENT STANDARDS	RIPRAP APRON AT PIPE OUTFALLS OTHER THAN AT SWIM	STD. NO. 306.1	REV.

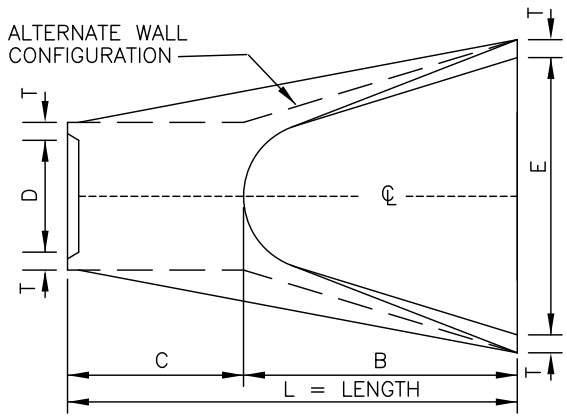

PLAN

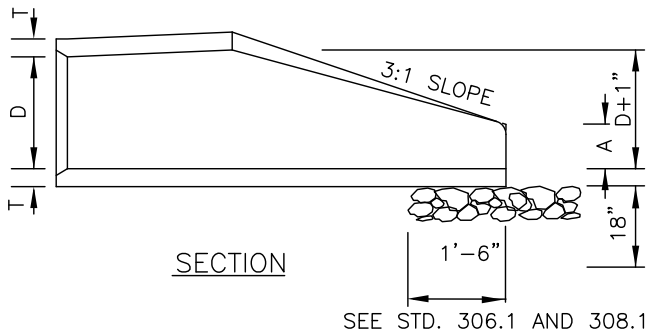

SECTION

SEE STD. 306.1 AND 308.1

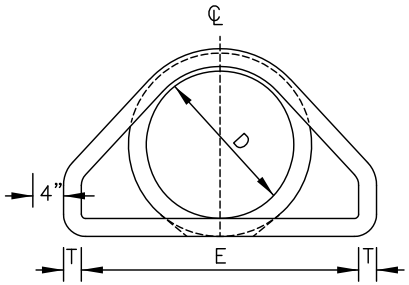

END VIEW

TABLE OF DIMENSIONS							
D	T	A	B	C	E	L	WT.
12"	2-1/4"	4"	2'-0"	4'-1"	2'-0"	6'-1"	730
15"	2-1/4"	6"	2'-3"	3'-10"	2'-0"	6'-1"	730
18"	2-1/2"	9"	2'-3"	3'-10"	3'-0"	6'-1"	1190
24"	3"	10"	3'-8"	2'-6"	4'-0"	6'-2"	1770
30"	3-1/2"	1'-0"	4'-6"	1'-8"	5'-0"	6'-2"	2380
36"	4"	1'-3"	5'-3"	2'-11"	6'-0"	8'-2"	5320
42"	4-1/2"	1'-9"	5'-3"	2'-11"	6'-6"	8'-2"	5920
48"	5"	2'-0"	6'-0"	2'-2"	7'-0"	8'-2"	7470
54"	5-1/2"	2'-3"	5'-6"	2'-10"	7'-6"	8'-4"	8810
60"	6"	2'-6"	5'-0"	3'-3"	8'-0"	8'-3"	11180
66"	6-1/2"	3'-0"	6'-0"	2'-3"	8'-6"	8'-3"	12530
72"	7"	3'-0"	6'-6"	1'-9"	9'-0"	8'-3"	13980

GENERAL NOTES:

1. SEE FORMER NCDOT STANDARD 310.01 FOR DETAILS.
2. REINFORCEMENT SHALL CONFORM TO THE REQUIREMENTS OF REINFORCED CONCRETE PIPE OF LIKE DIAMETER PER AASHTO M170, TABLE 2, WALL B.
3. ALL CONCRETE TO BE 3600 P.S.I COMPRESSIVE STRENGTH.
4. PROVIDE TONGUE OR SPIGOT JOINT AT INLET END SECTION.
5. PROVIDE GROOVE OR BELL JOINT AT OUTLET END SECTION.
6. THE DIMENSIONS FOR END SECTIONS SHALL SUBSTANTIALLY AGREE WITH THE TABLE. MINOR VARIATIONS WILL BE PERMITTED BASED ON THE MANUFACTURER'S STANDARD FORMS AND TEMPLATES.
7. NOT TO BE USED IN NCDOT MAINTAINED RIGHT OF WAY.

NOT TO SCALE

TOWN OF WAXHAW
LAND DEVELOPMENT STANDARDS

FLARED END SECTION
12" THRU 72" PIPE

STD. NO.	REV.
307.1	

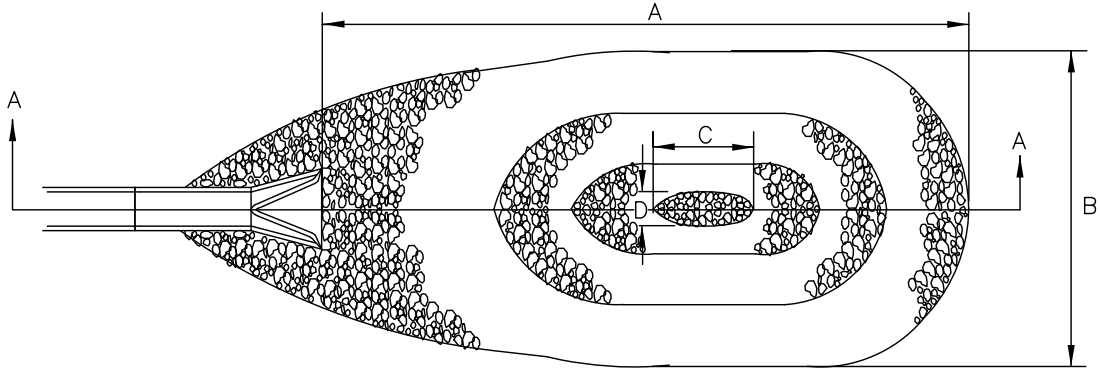

PLAN

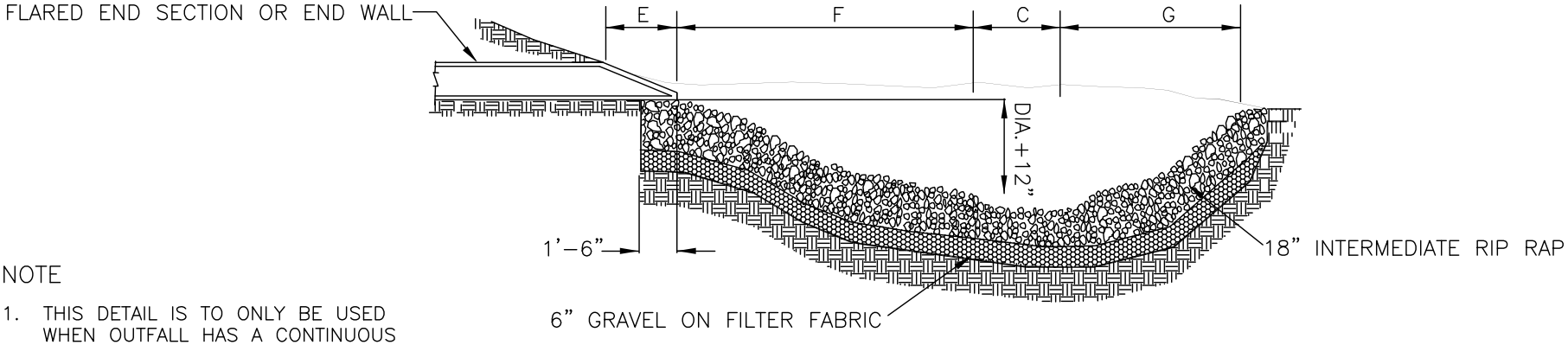

SECTION A–A

NOTE

1. THIS DETAIL IS TO ONLY BE USED WHEN OUTFALL HAS A CONTINUOUS FLOW OF WATER AND WITH PRIOR APPROVAL OF THE TOWN ENGINEER.

PIPE SIZE	A	B	C	D	E	F	G	WT. RIP RAP IN TONS
15"	10'	7'	1 1/2'	1'	1'	4 1/2'	3'	6
18"	12'	8'	2'	1'	1'	5'	4'	8
21"	15'	9'	2 1/2'	1 1/2'	1'	7'	4 1/2'	12
24"	17'	10'	2 1/2'	1 1/2'	1'	8'	5 1/2'	15
30"	20'	13'	3'	2'	2'	9'	6'	22
36"	24'	16'	3 1/2'	2'	2'	9 1/2'	7'	33

NOT TO SCALE

TOWN OF WAXHAW
LAND DEVELOPMENT STANDARDS

RIP RAP PLUNGE POOL

STD. NO.	REV.
308.1	

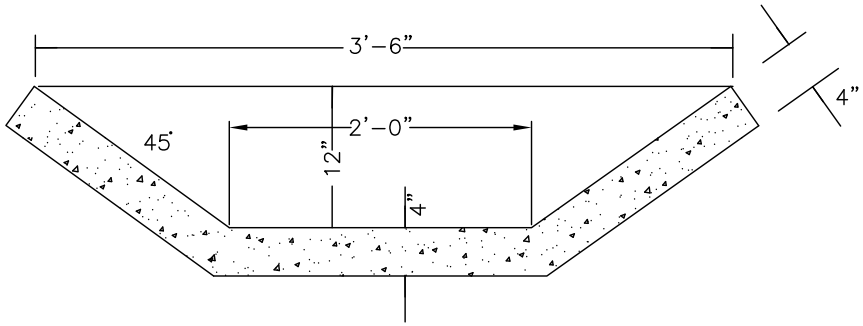

SLOPE DRAIN, BASE DITCH OR BERM DRAINAGE OUTLET DITCH

GENERAL NOTES:

IN THE 4" CONCRETE PAVED DITCHES PLACE 1/2" EXPANSION JOINT AT 30 FT INTERVALS AND AT ALL OTHER POINTS WHERE PROPOSED DITCHES ABUT RIGID OBJECTS. PLACE GROOVED JOINTS 1" DEEP AT 10' INTERVALS BETWEEN EXPANSION JOINTS.

WIDTH AND SHAPE OF PROPOSED 4" CONCRETE PAVED DITCHES SHALL BE AS SHOWN OR AS DIRECTED BY THE ENGINEER.

ALL CONCRETE TO BE 3600 P.S.I. COMPRESSIVE STRENGTH.

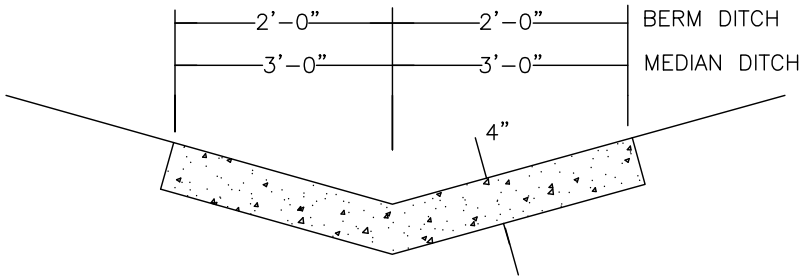

MEDIAN OR BERM DITCH

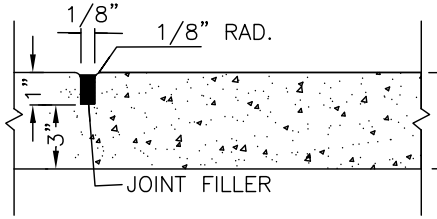

SHOWING GROOVED JOINT

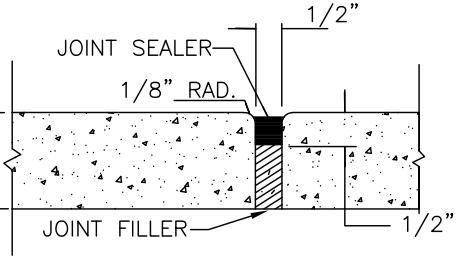

SHOWING EXPANSION JOINT

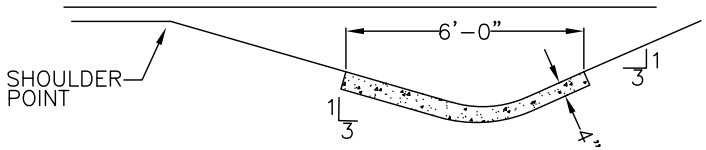

SIDE DITCH

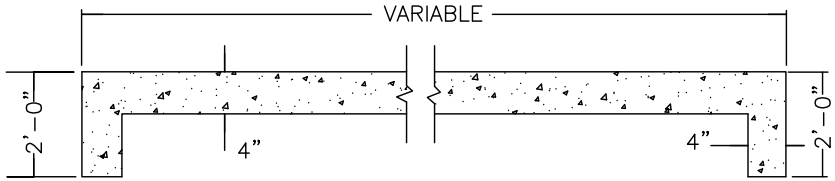

LONGITUDINAL SECTION OF PAVED DITCH

SHOWING 2'-0" CURTAIN WALL REQUIRED AT EACH END

NOT TO SCALE

	TOWN OF WAXHAW LAND DEVELOPMENT STANDARDS	CONCRETE PAVED DITCHES

STD. NO.	REV.
310.1	

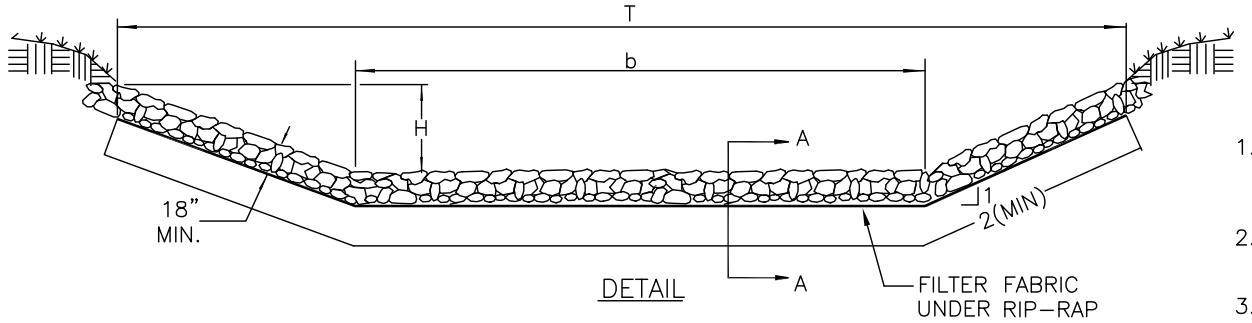

DETAIL

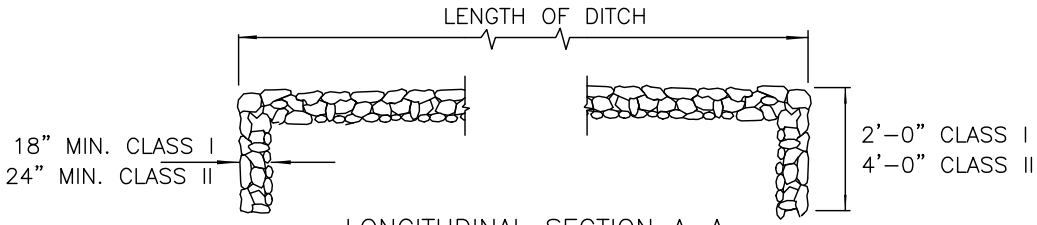

LONGITUDINAL SECTION A-A

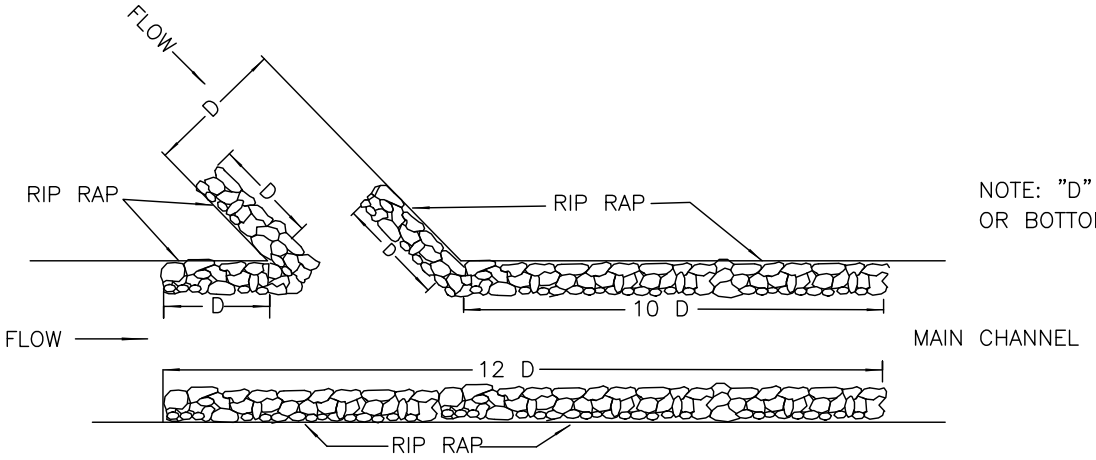

CHANNEL INTERSECTIONS

GENERAL NOTES:

1. IF BEDROCK IS ENCOUNTERED WITHIN THE LIMITS OF THE TOEWALL, BEGIN TOEWALL ON THE BEDROCK OR AS DIRECTED BY THE ENGINEER.
2. WHERE ONLY ONE SIDE REQUIRES RIP RAP CLASS I OR II, LIST STATION AND SIDE OF SAME.
3. CHANNEL AND RIP RAP SIZE TO BE DESIGNED BY THE ENGINEER.
4. DEPENDING ON SOIL CONDITIONS, WASHED STONE AND FILTER FABRIC MAY BE NECESSARY UNDER RIP RAP.
5. CHANNEL DEPTH "H" SHALL INCLUDE A MINIMUM 6" OF FREEBOARD.

NOTE: "D" EQUALS DIAMETER OF PIPE OR BOTTOM WIDTH OF CHANNEL.

NOT TO SCALE

	TOWN OF WAXHAW LAND DEVELOPMENT STANDARDS	RIP RAP DITCHES	STD. NO. 311.1 / REV.

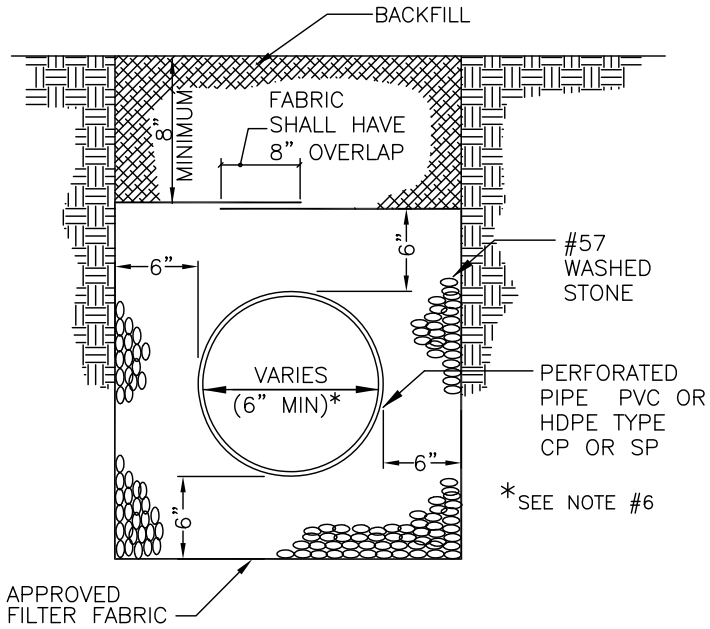

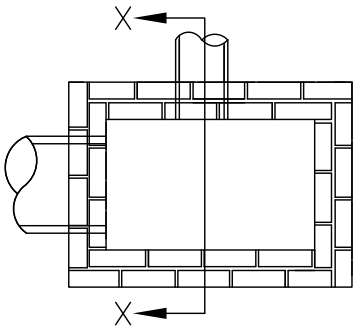

PLAN VIEW

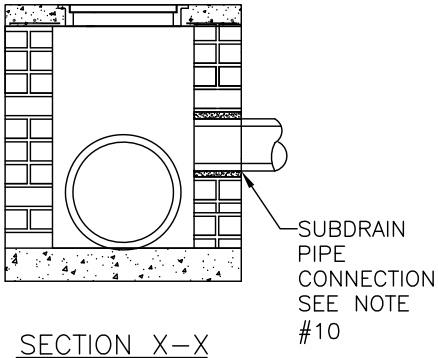

SECTION X–X

CONNECTION AT DRAINAGE STRUCTURE

NOTE: STRUCTURE SHOWN FOR REPRESENTATION PURPOSES ONLY.

NOTES:

1. A MINIMUM OF 6" FROM OUTSIDE DIAMETER OF PIPE TO SIDE OF TRENCH MUST BE ALLOWED FOR WASHED STONE. THE METHOD OF COMPACTING BACKFILL MATERIAL IS SUBJECT TO APPROVAL BY THE TOWN ENGINEER. AN APPROVED FILTER FABRIC SHALL BE PLACED AROUND STONE AND OVERLAPPED 8" AT TOP WITHIN STREET RIGHT OF WAY.
2. SUBDRAIN IS TO BE A MINIMUM 6" DIAMETER PERFORATED PIPE; USE SCHEDULE 40 PVC PER ASTM D1785 OR HDPE PER AASHTO M252, TYPE CP (SINGLE–WALL, CORRUGATED) OR TYPE SP (DOUBLE–WALL, SMOOTH INTERIOR).
3. OUTLET PIPE FROM SUBDRAIN SHALL BE NON–PERFORATED UNDER PAVEMENT (INCLUDING SIDEWALKS AND DRIVEWAYS). SEE SITE PLAN FOR SLOPE OF SUBDRAIN AND TIE IN TO STORM DRAINAGE.
4. THE OUTLET PIPES SHALL BE SCHEDULE 40 (MIN.) PVC PER ASTM D2665 OR HDPE PER AASHTO M252, TYPE S (DOUBLE WALL, SMOOTH INTERIOR) UNDER ROADWAYS.
5. FILTER FABRIC SHALL BE AN APPROVED, TYPE 2 WATER PERMEABLE, SYNTHETIC FABRIC.
6. A MINIMUM 4" DIAMETER SUBDRAIN MAY BE USED IN PLANTING AREAS.
7. CLEAN–OUTS ARE RECOMMENDED AT ALL PIPE INTERSECTIONS AND AT A 100' MAXIMUM SEPARATION.
8. SUBDRAIN INVERTS AT CATCH BASINS SHOULD BE INSTALLED ABOVE THE BOTTOM TO AVOID SURCHARGE OF SUBDRAIN SYSTEM.
9. ALL SUBDRAINS WILL TIE INTO A STANDARD DRAINAGE STRUCTURE OR DAYLIGHT TO THE SURFACE WHERE APPROPRIATE, AND NOT DIRECTLY INTO A PIPE.
10. ONLY REMOVE NECESSARY MASONRY UNITS TO INSTALL PIPE INTO BASIN WALL. PRECAST STRUCTURES WILL BE CORE DRILLED 2 INCHES LARGER THAN PIPE DIAMETER TO PROVIDE FOR INSTALLATION OF PIPE IN WALL.
11. ALL PIPE IN STORM DRAIN STRUCTURE SHALL BE STRUCK EVEN WITH THE INSIDE WALL, GROUTED AND BRUSHED SMOOTH.
12. PIPE INSTALLATION PER SECTION 300 NCDOT STANDARD SPECIFICATIONS FOR ROADS AND STRUCTURES.
13. SUBDRAINS WILL BE INSTALLED AT A DRAINAGE STRUCTURE AND THIS CONNECTION WILL NEED TO BE INSPECTED BY TOWN STAFF PRIOR TO BACKFILLING.
14. SCHEDULE 40 PVC (NON–PERFORATED) SHALL BE USED TO MAKE THE CONNECTION TO THE STORM DRAINAGE SYSTEM. CONNECTION WILL BE WITHIN THE RIGHT–OF–WAY UNLESS OTHERWISE APPROVED BY THE TOWN ENGINEER.
15. PREFABRICATED DRAINAGE MAY BE USED WITH APPROVAL OF TOWN ENGINEER
16. MAXIMUM OF TWO SUBDRAIN PENETRATIONS PER WALL OF DRAINAGE STRUCTURE.

TOWN OF WAXHAW LAND DEVELOPMENT STANDARDS	SUBDRAIN DETAIL	STD. NO.	REV.
		312.1	

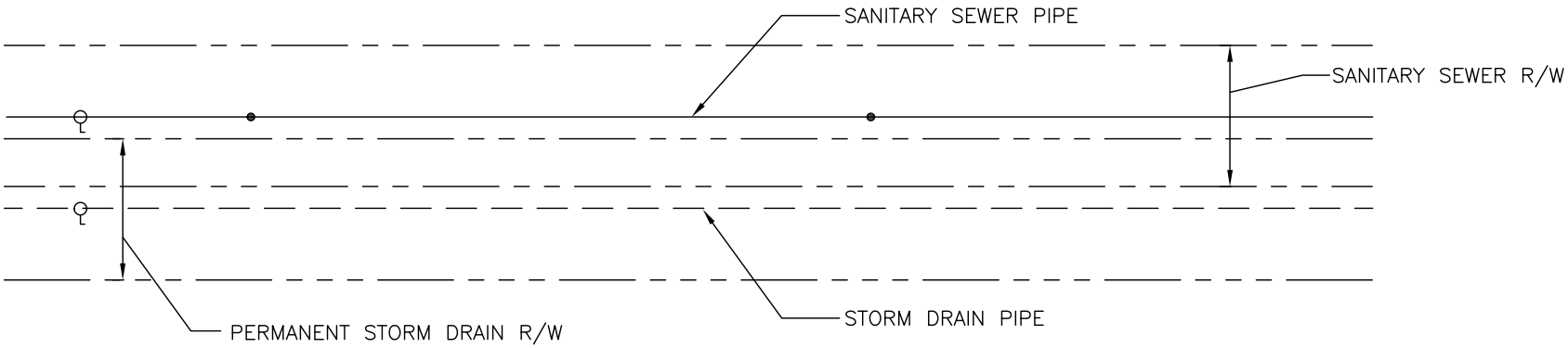

THE SANITARY SEWER AND STORM DRAINAGE RIGHTS OF WAY MAY OVERLAP; HOWEVER THE PIPE AND ASSOCIATED STRUCTURES MUST NOT BE IN THE OTHER UTILITY'S RIGHT OF WAY. THE SANITARY SEWER RIGHT OF WAY WIDTHS AND SEPARATION SHALL BE AS OUTLINED IN UNION COUNTY PUBLIC WORKS SANITARY SEWER & WATER SPECIFICATIONS DESIGN MANUAL. THIS DETAIL DOES NOT APPLY TO STORM DRAINAGE UTILIZING OPEN CHANNEL FLOW.

PLAN VIEW

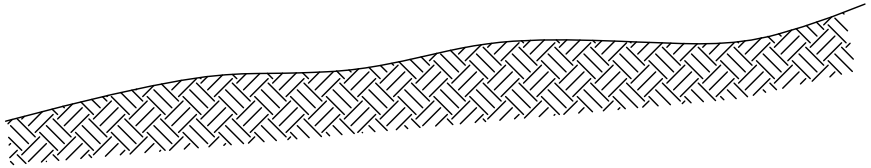

THE VERTICAL SEPARATION GUIDELINE WILL BE USED UP TO THE POINT WHERE THE TWO RIGHTS OF WAY ADJOIN EACH OTHER.

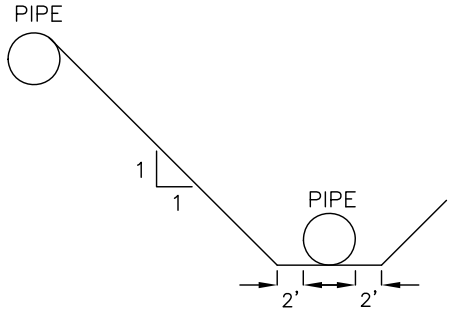

THE SANITARY SEWER AND STORM DRAINAGE PIPES MUST BE NO CLOSER TOGETHER HORIZONTALLY THAN THE VERTICAL DISTANCE BETWEEN THE TOP OF THE HIGHER PIPE AND THE BOTTOM OF THE LOWER PIPE. A MAINTENANCE CREW MUST BE ABLE TO DIG DOWN TO THE LOWER PIPE SLOPING THE DITCH ON A 1:1 SLOPE UP FROM THE REQUIRED TRENCH BOTTOM WIDTH AND NOT EXPOSE THE HIGHER PIPE.

PROFILE VIEW

NOT TO SCALE

TOWN OF WAXHAW LAND DEVELOPMENT STANDARDS	OVERLAPPING STORM DRAINAGE/SANITARY SEWER EASEMENTS	STD. NO.	REV.
		313.1	

GENERAL NOTES:

1. FOR STREAMS CARRYING 500 ACRES OR MORE OF SURFACE RUNOFF, THE EASEMENT REQUIREMENT IS TO BE THE WIDTH OF THE STREAM FROM TOP OF BANK TO TOP OF BANK, PLUS (+) 10' ON EACH SIDE OF STREAM. (40' MINIMUM WIDTH)

2. FOR OPEN CHANNELS THE MINIMUM EASEMENT MUST CONTAIN THE WIDTH OF THE STREAM FROM TOP OF BANK TO TOP BANK.

3. WIDER EASEMENT WIDTHS MAY BE REQUIRED FOR PIPE DEPTHS GREATER THAN TEN FEET.

4. EASEMENTS WISTHS FOR ELLIPTICAL OR IRREGULAR PIPE SIZES SHALL BE APPROVED BY THE TOWN ENGINEER.

5. PIPE SYSTEMS AND OPEN CHANNELS ON PRIVATE PROPERTY SHALL BE PLACED IN A STORM DRAINAGE EASEMENT.

EASEMENT REQUIREMENTS FOR OPEN STORM DRAINAGE CHANNELS

AREA IN ACREAGE	EASEMENT REQUIREMENT
0–45 ac.	20'
45–120 ac.	30'
120–500 ac.	40'
500 ac.+	SEE NOTE

EASEMENT REQUIREMENTS FOR STORM DRAIN PIPE

PIPE SIZE	EASEMENT REQUIREMENT
15" – 36"	20'
42" – 48"	25'
54"+	30'MIN (VARIES)

NOT TO SCALE

TOWN OF WAXHAW
LAND DEVELOPMENT STANDARDS

MINIMUM DRAINAGE EASEMENT REQUIREMENTS FOR STORM DRAIN PIPES AND OPEN CHANNELS

STD. NO.	REV.
314.1	

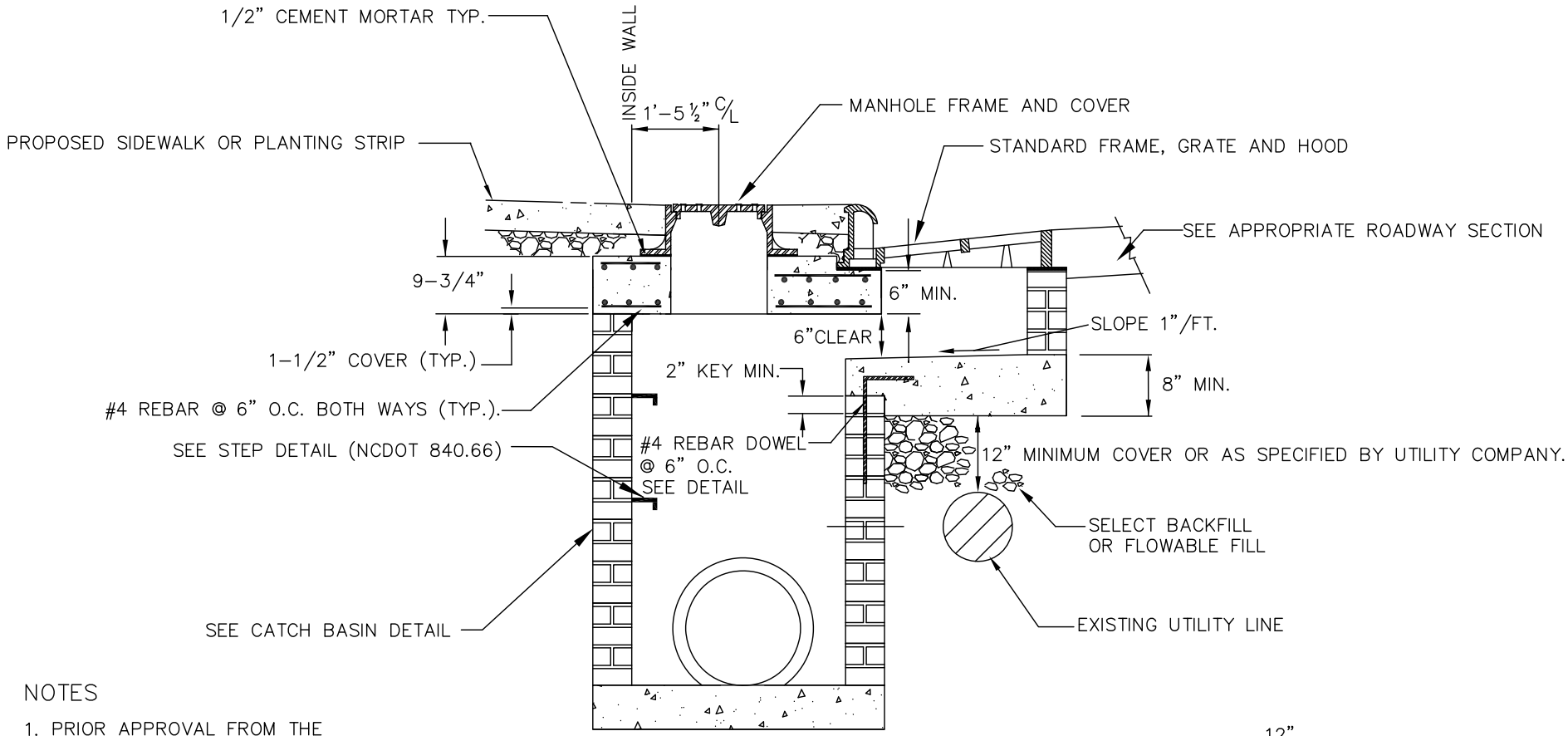

NOTES

1. PRIOR APPROVAL FROM THE TOWN ENGINEER IS REQUIRED.
2. THIS STRUCTURE IS TO ONLY BE USED ON TOWN MAINTAINED STREETS AND NOT ON NCDOT STREETS WITHOUT THEIR PERMISSION.

OFFSET CATCH BASIN EXISTING UTILITY CONFLICT

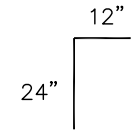

DOWEL DETAIL

NOT TO SCALE

	TOWN OF WAXHAW LAND DEVELOPMENT STANDARDS	OFFSET CATCH BASIN	STD. NO. 315.1 / REV.

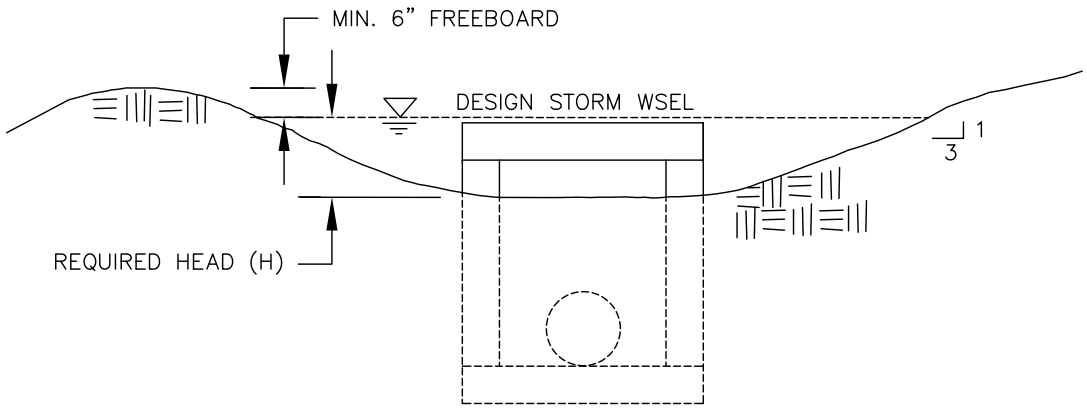

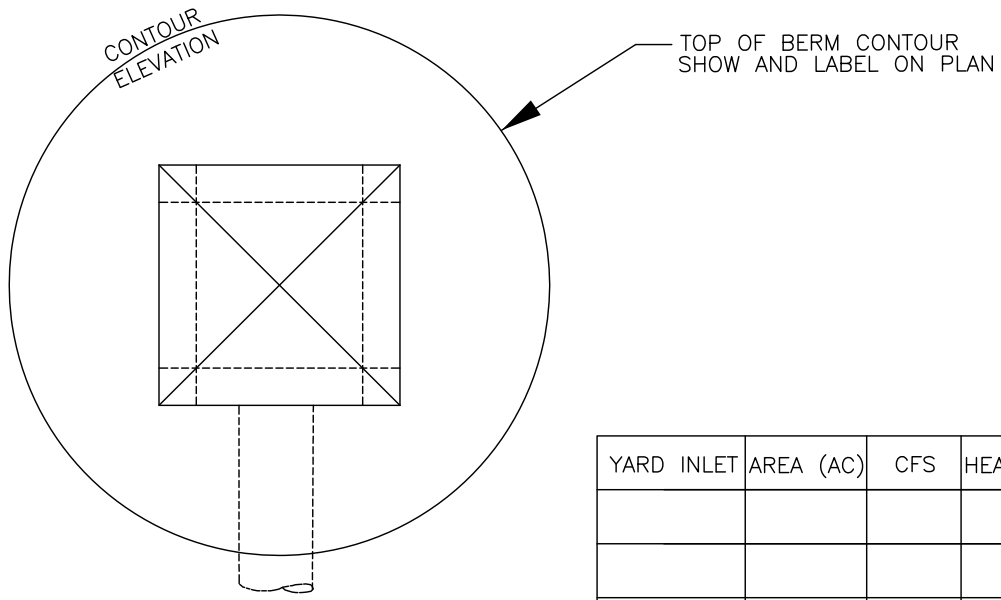

YARD INLET	AREA (AC)	CFS	HEAD H (FT)	COMMENT

TOWN OF WAXHAW
LAND DEVELOPMENT STANDARDS

NOT TO SCALE

GRADING AT DROP INLET

STD. NO. 316.1 | REV.

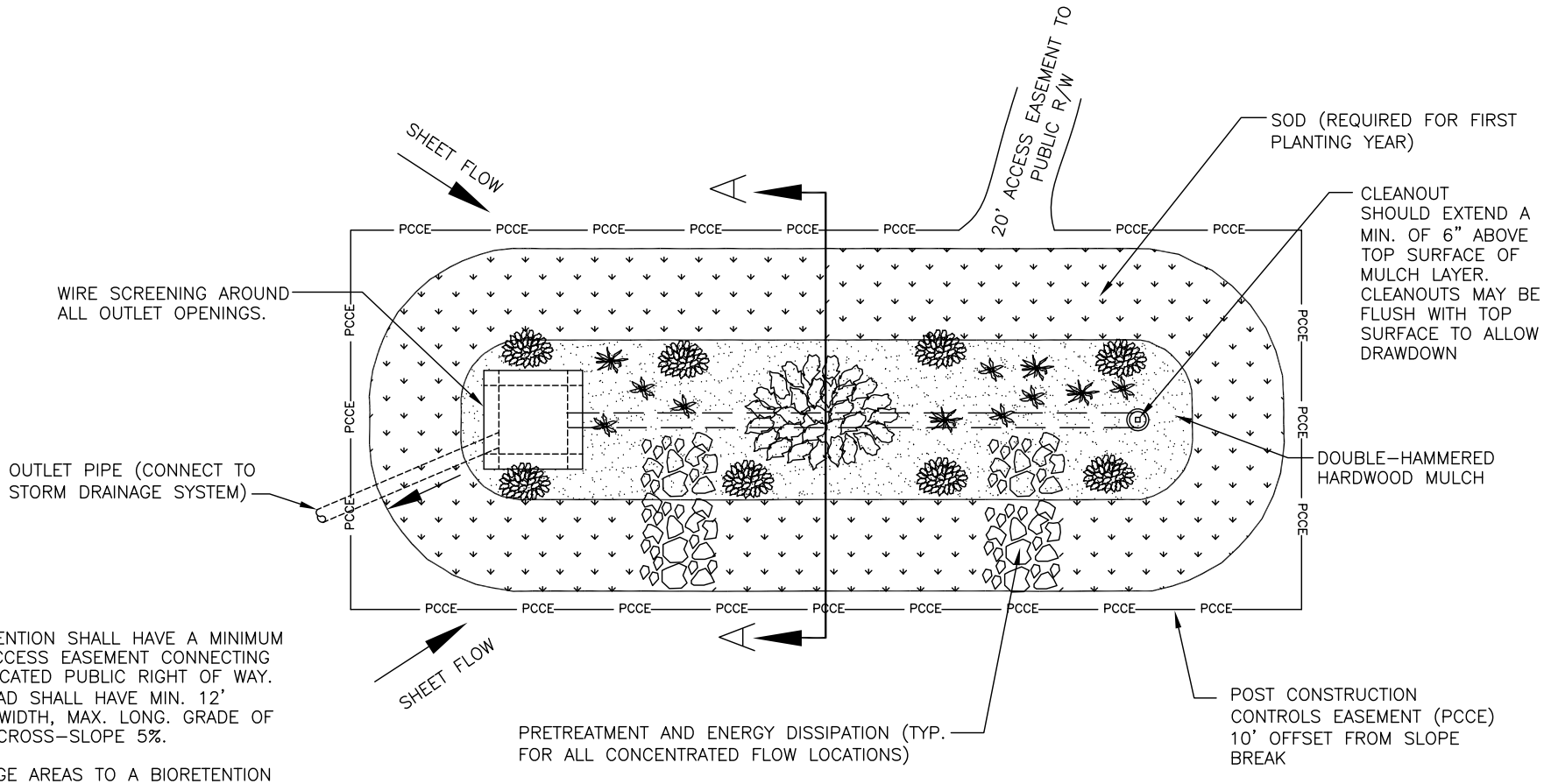

PLAN

NOTES:

1. ALL BIORETENTION SHALL HAVE A MINIMUM 20 FOOT ACCESS EASEMENT CONNECTING TO A DEDICATED PUBLIC RIGHT OF WAY. ACCESS ROAD SHALL HAVE MIN. 12' STABILIZED WIDTH, MAX. LONG. GRADE OF 15%, MAX. CROSS-SLOPE 5%.
2. ALL DRAINAGE AREAS TO A BIORETENTION FACILITY ARE TO BE STABILIZED PRIOR TO INSTALLATION OF AMENDED SOILS, MULCH OR PLANTINGS.
3. AMENDED SOIL WILL ONLY BE PERMITTED WITH A VALID SOIL ANALYSIS REPORT.
4. INSTALL WIRE SCREENING AROUND ALL OUTLET OPENINGS TO PREVENT LOSS OF MULCH.

NOT TO SCALE

	TOWN OF WAXHAW LAND DEVELOPMENT STANDARDS	BIORETENTION PLAN	STD. NO. 400.1 / REV.

NOTES:

1. ALL BIORETENTION FACILITIES SHALL HAVE A MINIMUM 20 FOOT ACCESS EASEMENT CONNECTING TO A DEDICATED PUBLIC RIGHT OF WAY. ACCESS ROAD SHALL HAVE MIN. 12' STABILIZED WIDTH, MAX. LONG. GRADE OF 15%, MAX. CROSS-SLOPE 5%.
2. ALL DRAINAGE AREAS TO A BIORETENTION FACILITY ARE TO BE STABILIZED PRIOR TO INSTALLATION OF AMENDED SOILS, MULCH OR PLANTINGS.
3. AMENDED SOIL WILL ONLY BE PERMITTED WITH A VALID SOIL ANALYSIS REPORT. NO AMENDED SOIL SHALL BE ALLOWED ON THE SIDE SLOPES.
4. INSTALL WIRE SCREENING AROUND ALL OUTLET OPENINGS TO PREVENT LOSS OF MULCH.
5. PVC UNDERDRAIN PIPE SHOULD HAVE 3/8" PERFORATIONS SPACED AT 6" CENTERS, MIN. 4 HOLES PER ROW. MAX SPACING OF UNDERDRAIN PIPE IS 10 FEET ON CENTER. HDPE SHALL ADHERE TO AASHTO M252 SPECS.
6. UNDERDRAIN CLEANOUTS SHOULD EXTEND A MIN. OF 6" ABOVE TOP SURFACE OF MULCH LAYER. CLEANOUTS MAY BE FLUSH WITH TOP OF SURFACE TO ALLOW DRAWDOWN.
7. ONLY SMALL MATURING TREES ARE ALLOWED TO BE PLANTED IN THE AMENDED SOILS.

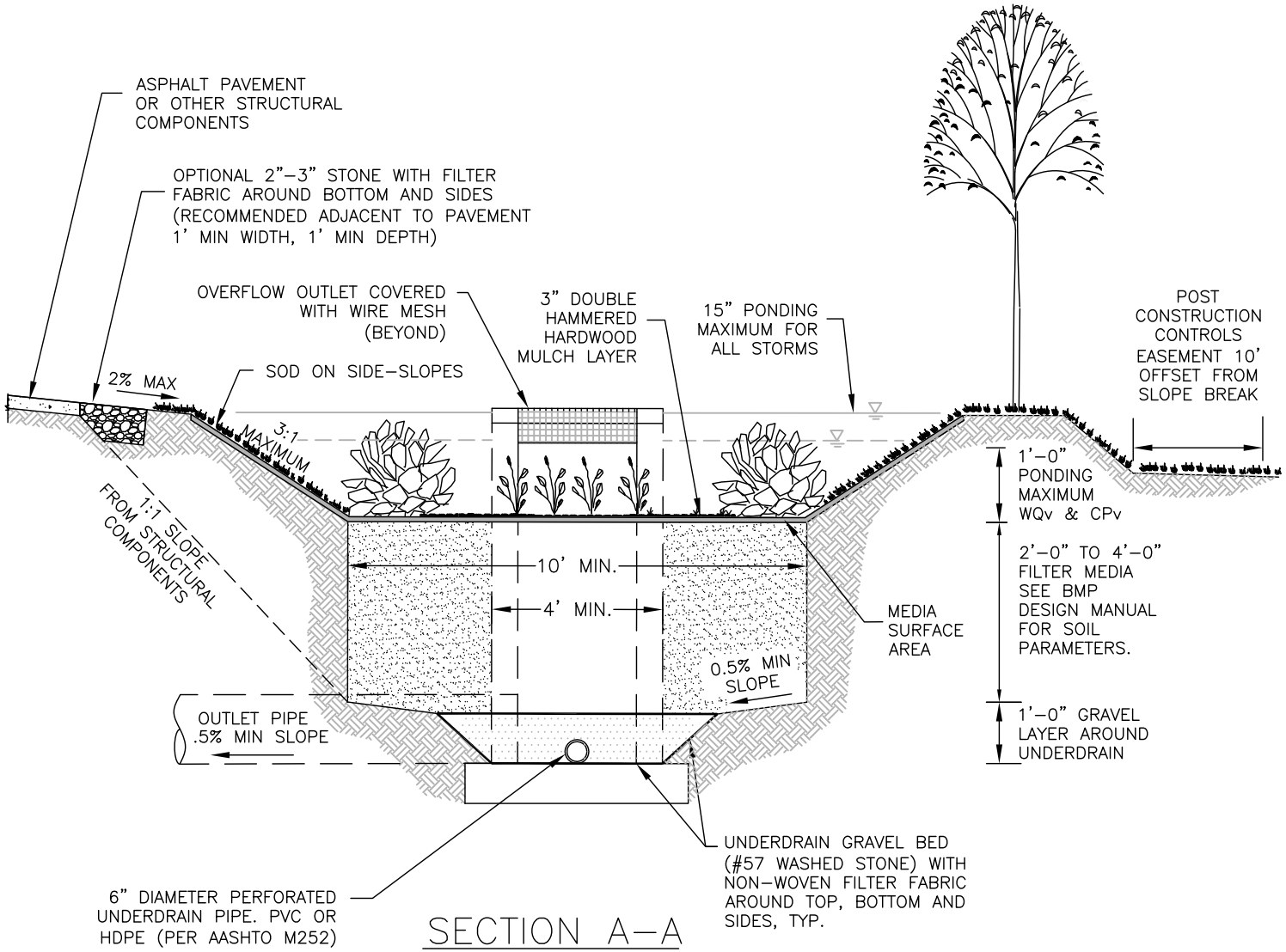

SECTION A–A

NOT TO SCALE

	TOWN OF WAXHAW LAND DEVELOPMENT STANDARDS	BIORETENTION CROSS–SECTION	STD. NO. 401.1 / REV.

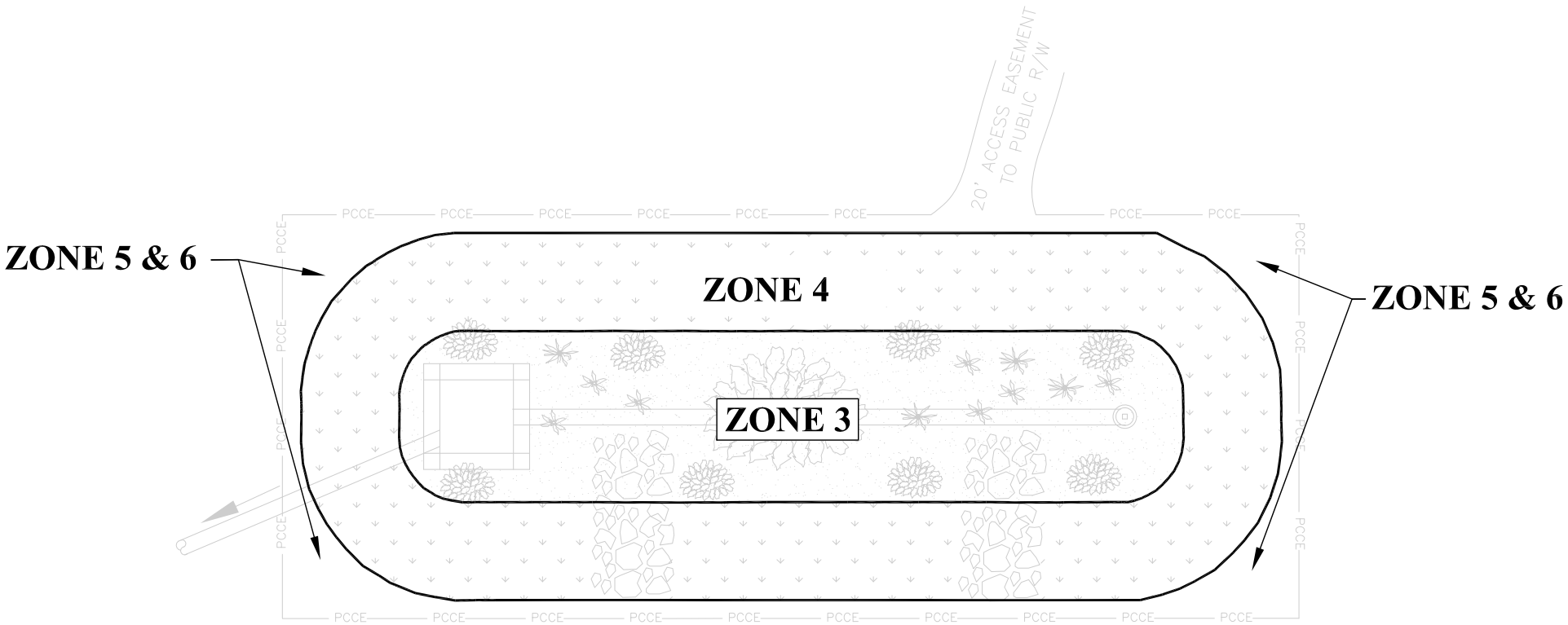

PLAN

NOTES:

1. PLANTING ZONES AND PLANT SELECTION PER THE NCDEQ STORMWATER BMP MANUAL, CHAPTER 6 & APPENDICES.
2. ALL PLANTINGS SHALL BE LOCAL NATIVE SPECIES.
3. IRRIGATION MAY BE PROVIDED FOR INITIAL ESTABLISHMENT AND DRY SEASONS.
4. ONLY SMALL MATURING TREES ARE ALLOWED TO BE PLANTED IN THE AMENDED SOILS.

NOT TO SCALE

TOWN OF WAXHAW LAND DEVELOPMENT STANDARDS	BIORETENTION PLANTING PLAN	STD. NO.	REV.
		402.1	

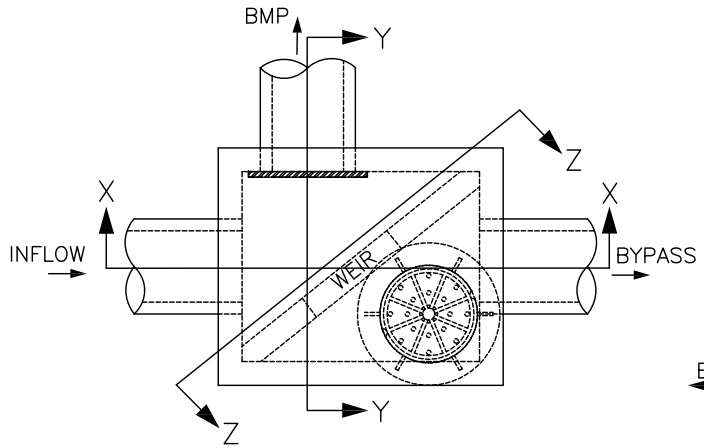

PLAN

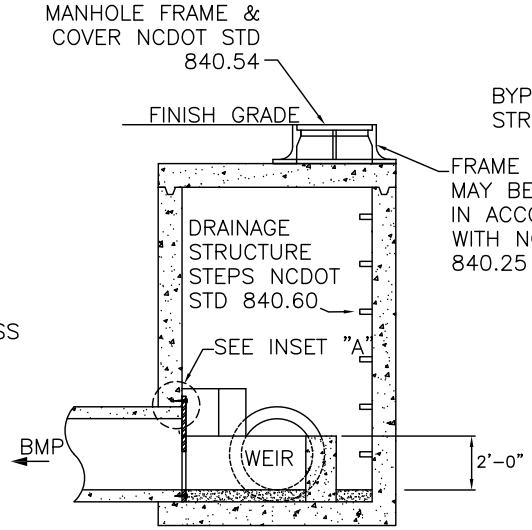

SECTION Y–Y

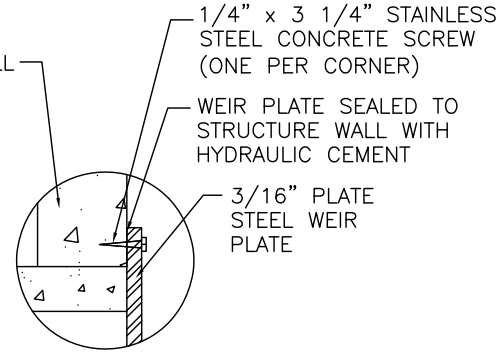

INSET "A"

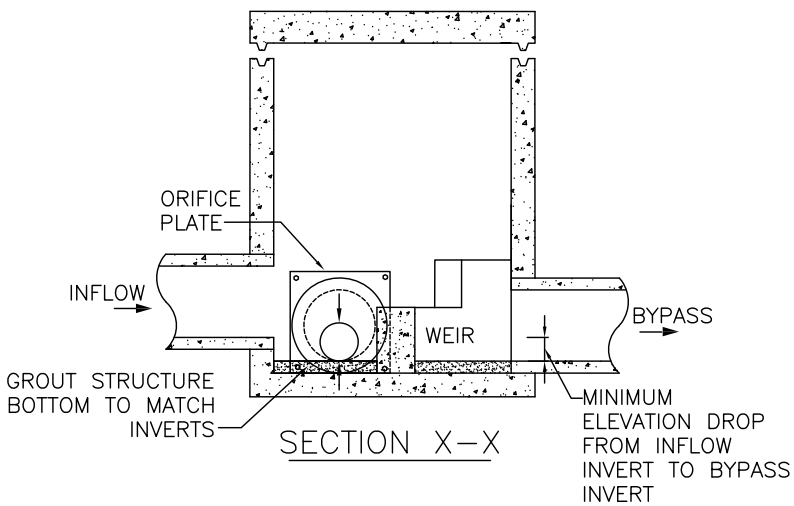

SECTION X–X

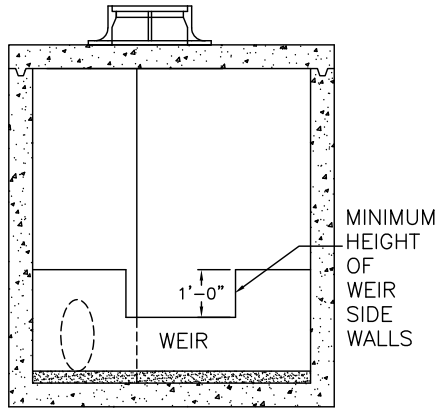

SECTION Z–Z

NOTES:

1. ALL CONCRETE SHALL BE 3600 PSI.
2. ALL JOINTS ARE TO BE SEALED WATER TIGHT.
3. WEIR IS TO BE POURED–IN–PLACE CONCRETE.
4. REFER TO NCDOT STANDARD DRAWINGS FOR BOX CONSTRUCTION.
5. NOT ACCEPTABLE FOR USE IN STREET RIGHT OF WAY WITHOUT TOWN/NCDOT APPROVAL.

NOT TO SCALE

	TOWN OF WAXHAW LAND DEVELOPMENT STANDARDS	FLOW SPLITTER STRUCTURE	STD. NO. 404.1 / REV.

NOTES:

1. 4–6 INCH LAYER OF AMENDED SOIL IS RECCOMMENDED ON LITTORAL SHELF AREA WHERE PLANTINGS ARE REQUIRED (SEE SOIL PARAMETERS IN BMP DESIGN MANUAL)

2. PROVIDE 20 ACCESS EASEMENT TO CONNECT WETPOND EASEMENT TO DEDICATED RIGHT OF WAY. ACCESS ROAD SHALL HAVE MIN. 12' STABILIZED WIDTH, MAX. LONG. GRADE OF 15%, MAX. CROSS–SLOPE 5%.

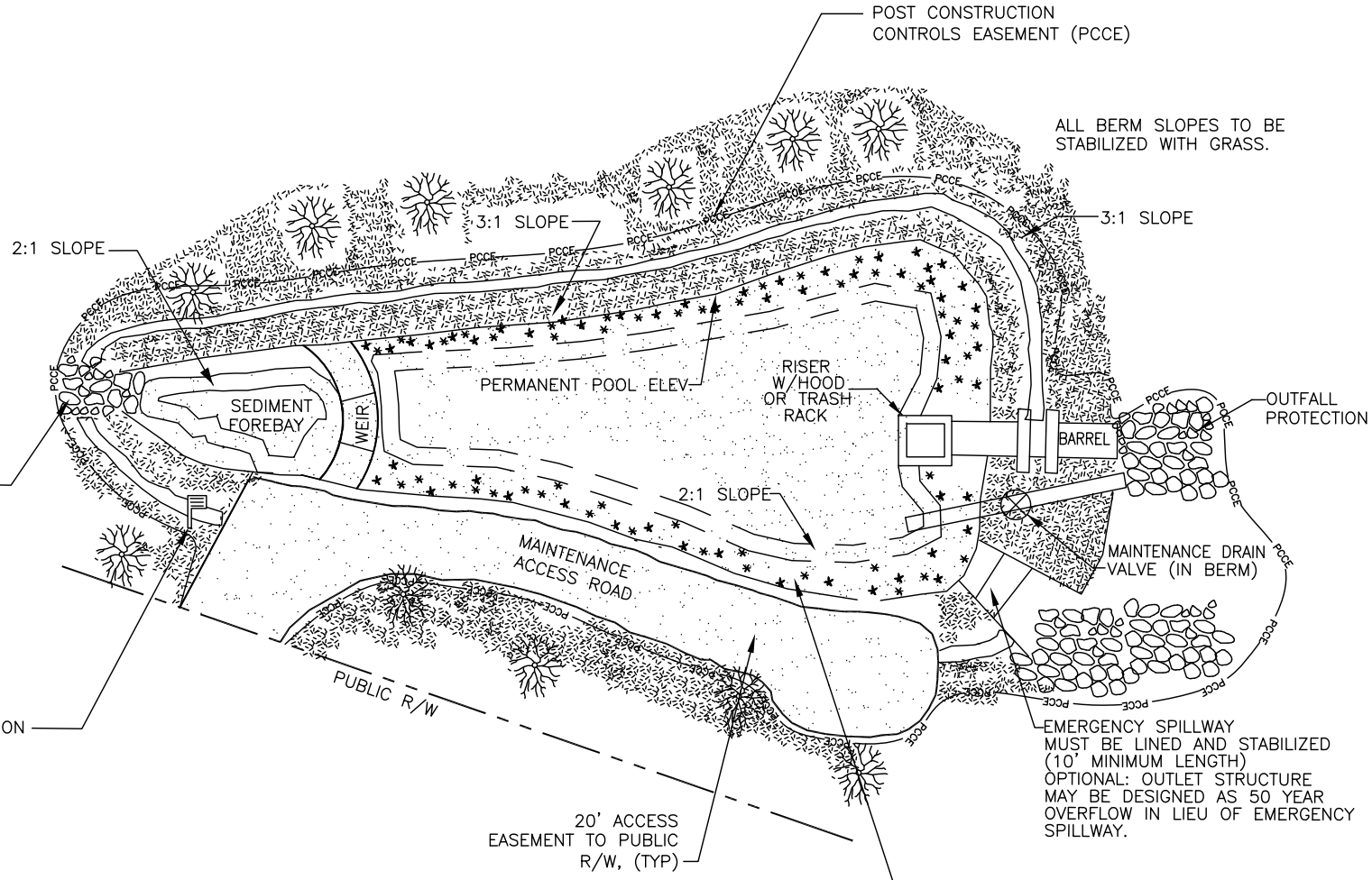

PLAN VIEW

NOT TO SCALE

	TOWN OF WAXHAW LAND DEVELOPMENT STANDARDS	WETPOND PLAN

STD. NO.	REV.
405.1	

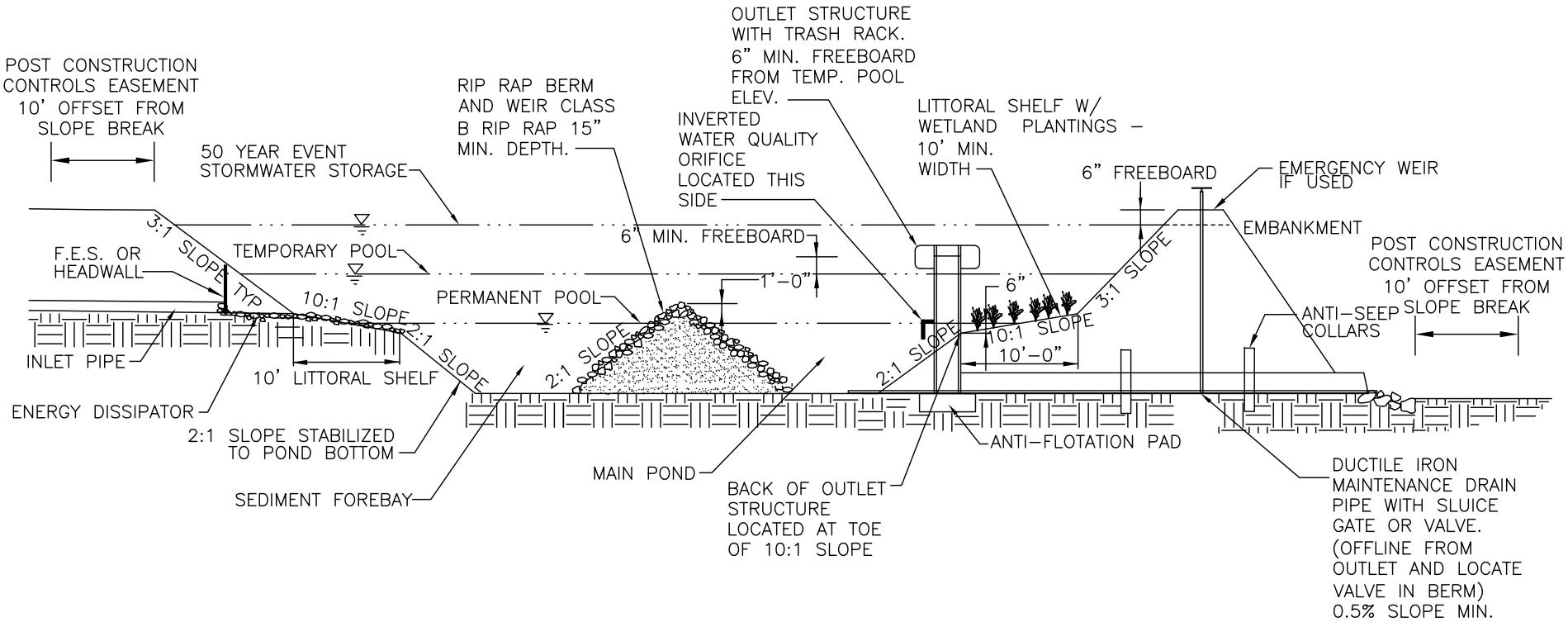

NOTES:

1. 4–6 INCH LAYER OF AMENDED SOIL IS RECOMMENDED IN ANY AREA WHERE PLANTINGS ARE REQUIRED (SEE NCDEQ STORMWATER BMP MANUAL).

NOT TO SCALE

	TOWN OF WAXHAW LAND DEVELOPMENT STANDARDS	WETPOND PROFILE	STD. NO. 406.1 / REV.

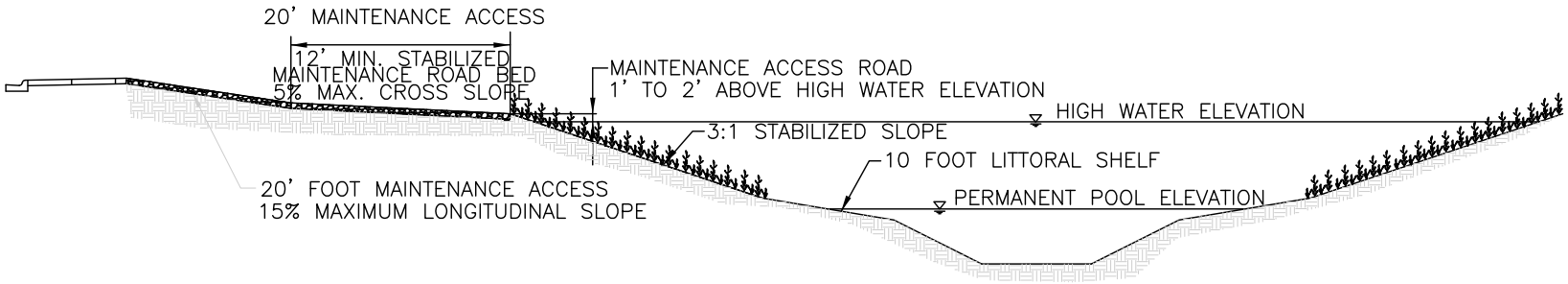

SECTION AT MAINTENANCE ROAD ACCESS AND FOREBAY

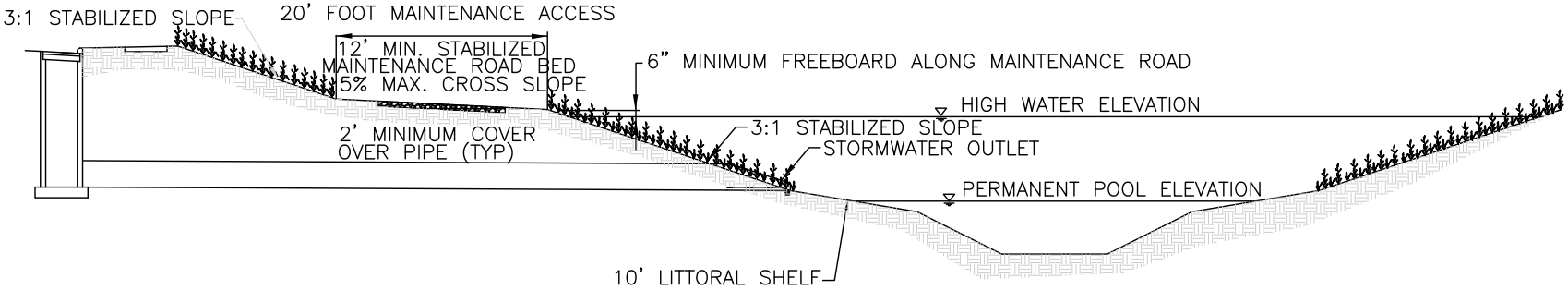

SECTION AT STORMWATER OUTFALL

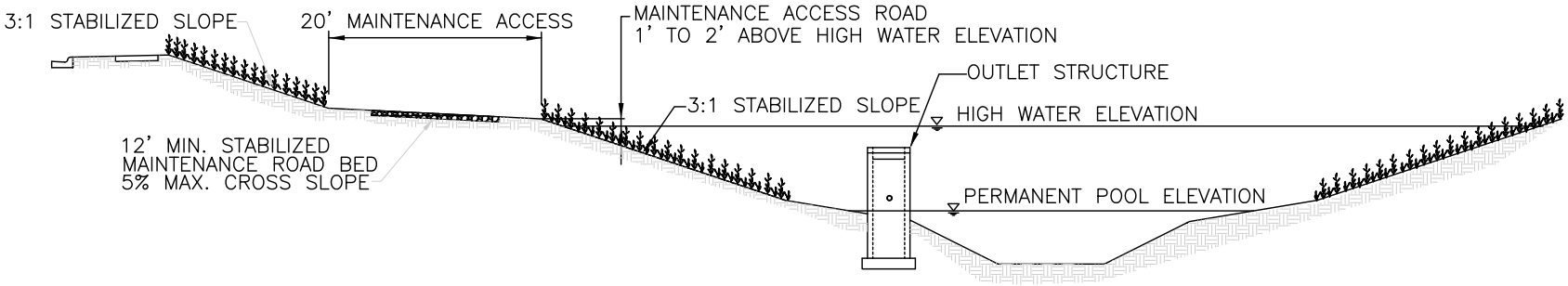

SECTION AT OUTLET STRUCTURE

NOT TO SCALE

	TOWN OF WAXHAW LAND DEVELOPMENT STANDARDS	WETPOND CROSS SECTIONS

STD. NO.	REV.
407.1	

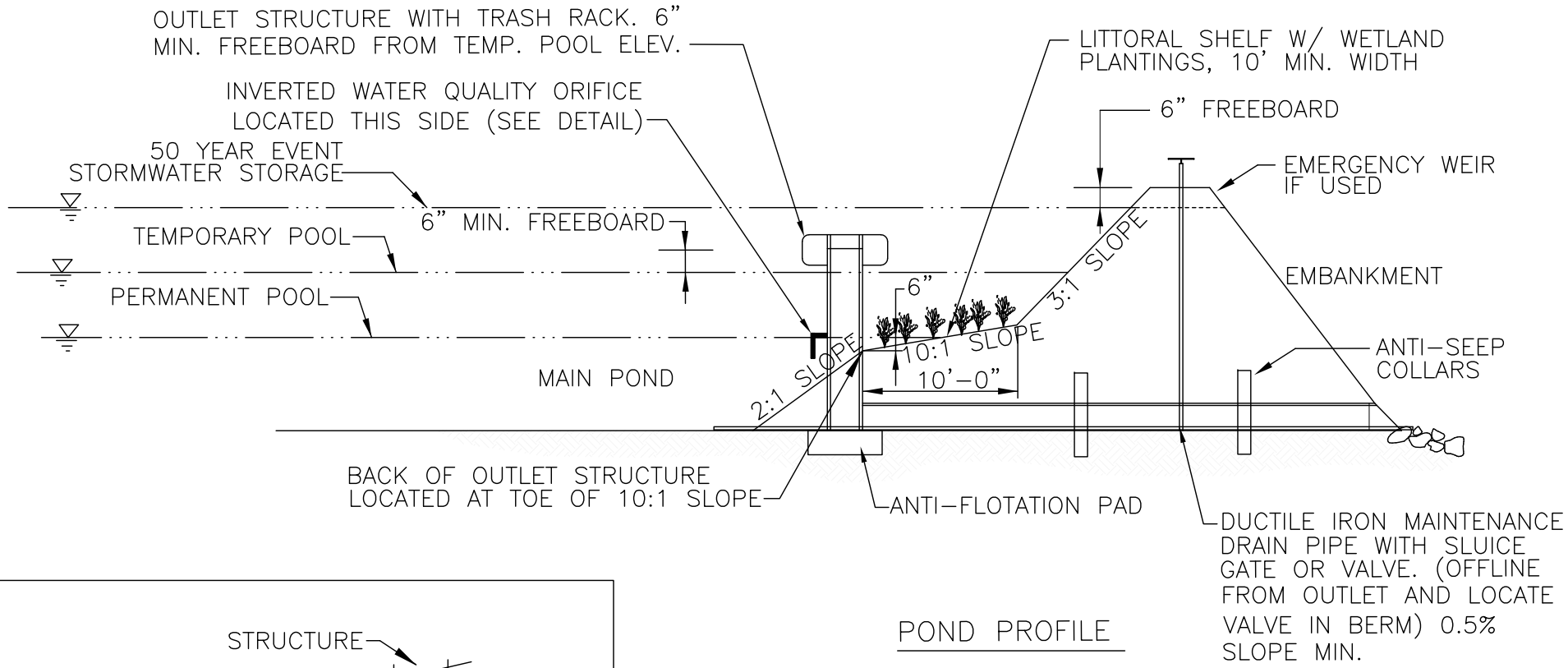

POND PROFILE

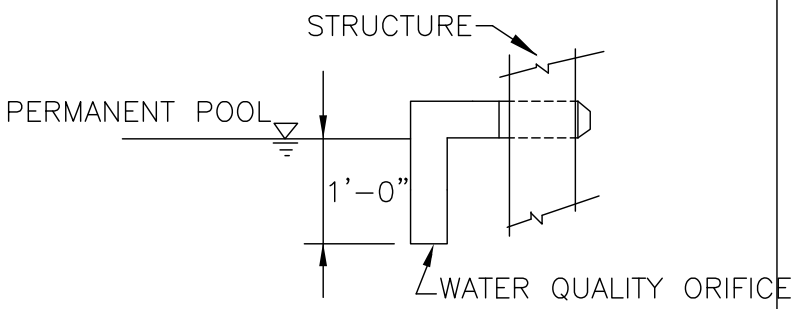

WATER QUALITY ORIFICE DETAIL

NOT TO SCALE

	TOWN OF WAXHAW LAND DEVELOPMENT STANDARDS	WETPOND LITTORAL SHELF AND BERM DETAIL	STD. NO. 408.1 / REV.

NOTES:

1. PLANTINGS ZONES AND PLANT SELECTION PER THE NCDEQ STORMWATER BMP MANUAL, CHAPTER 6 & APPENDICES.

2. ALL PLANTINGS SHALL BE LOCAL NATIVE SPECIES.

3. IRRIGATION MAY BE PROVIDED FOR INITIAL ESTABLISHMENT AND DRY SEASONS.

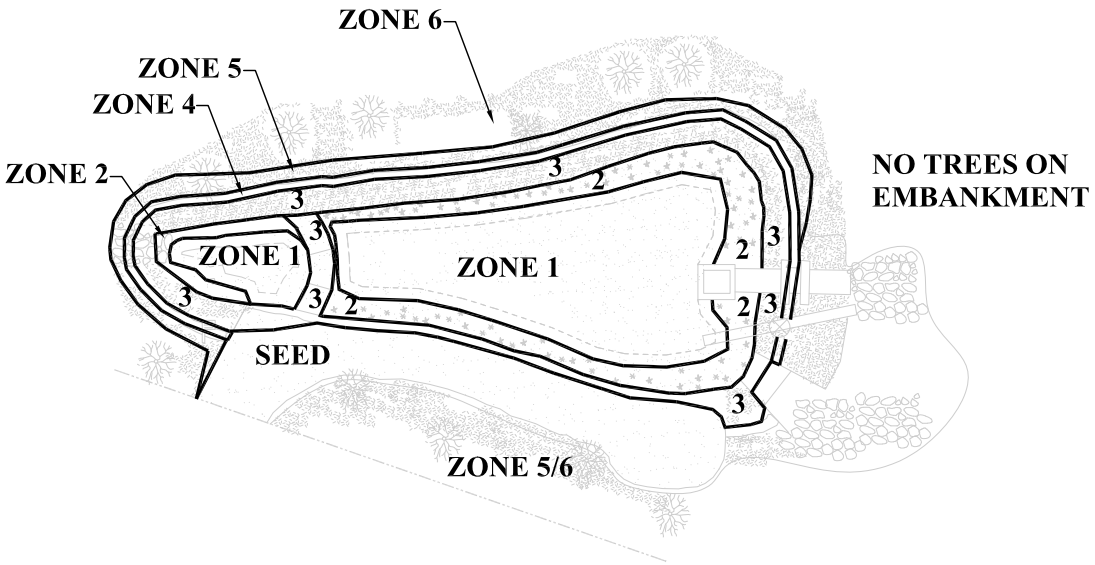

PLAN VIEW
NOT TO SCALE

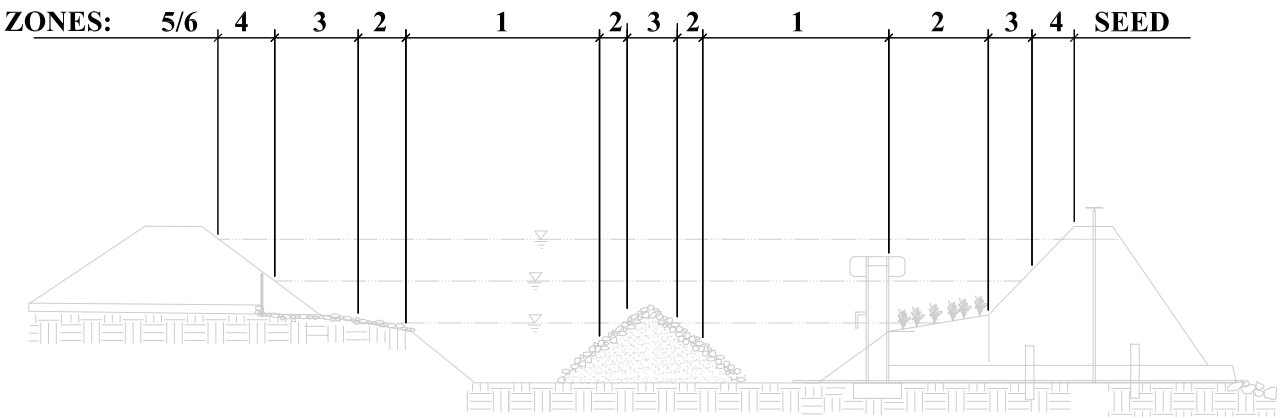

POND CROSS SECTION
NOT TO SCALE

NOT TO SCALE

	TOWN OF WAXHAW LAND DEVELOPMENT STANDARDS	WETPOND PLANTING PLAN

STD. NO.	REV.
409.1	

NOTES:

1. 4–6 INCH LAYER OF AMENDED SOIL IS REQUIRED ON ANY MARSH AREA WHERE PLANTINGS ARE REQUIRED (SEE SOIL PARAMETERS IN (SEE NCDEQ STORMWATER BMP MANUAL)

2. PROVIDE 20' ACCESS EASEMENT TO CONNECT WETLAND EASEMENT TO DEDICATED RIGHT OF WAY.

3. ALL WETLANDS SHALL HAVE A MINIMUM 20 FOOT ACCESS EASEMENT CONNECTING TO A DEDICATED PUBLIC RIGHT OF WAY. ACCESS ROAD SHALL HAVE MIN. 12' STABILIZED WIDTH, MAX. LONG. GRADE OF 15%, MAX. CROSS–SLOPE 5%.

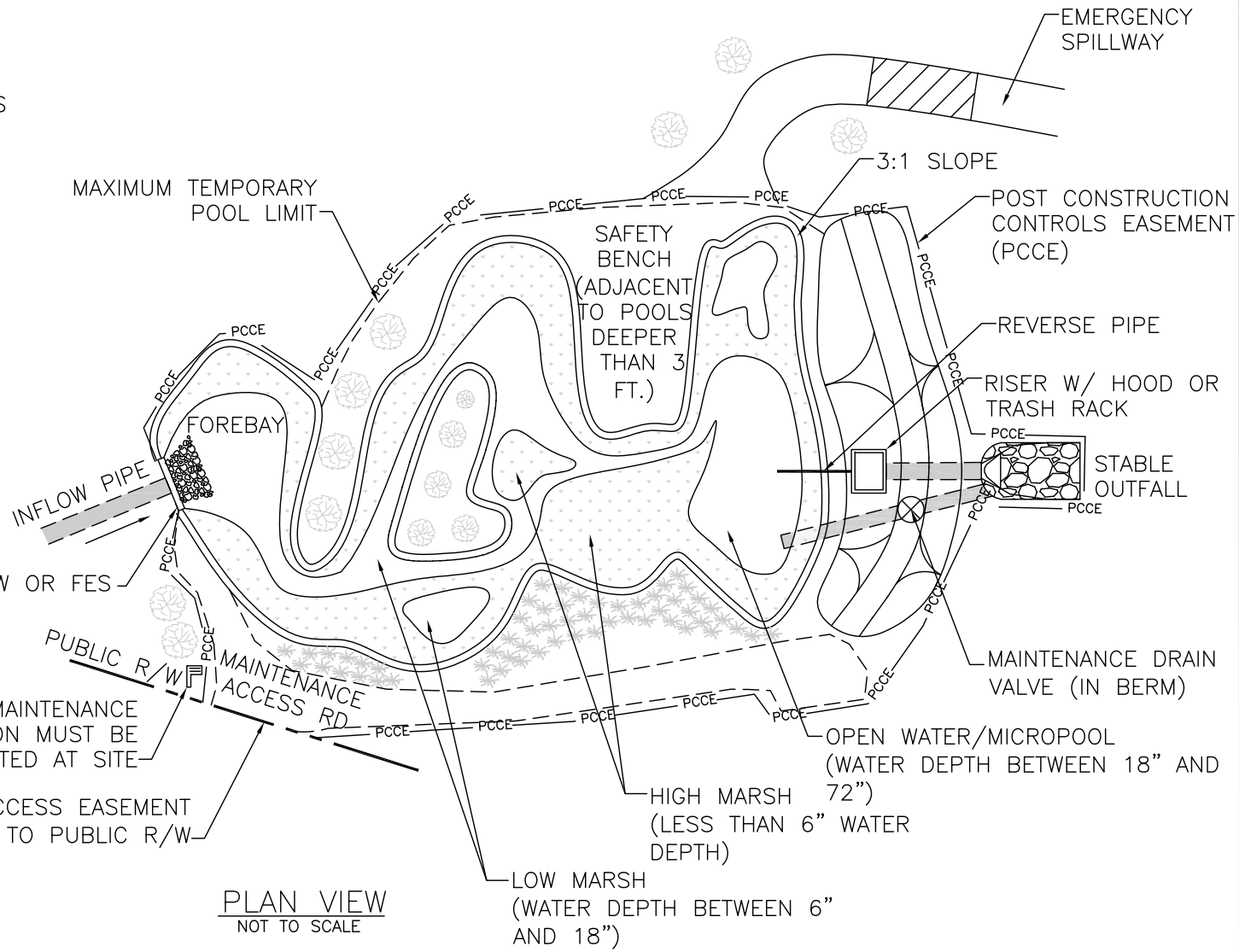

PLAN VIEW
NOT TO SCALE

NOT TO SCALE

	TOWN OF WAXHAW LAND DEVELOPMENT STANDARDS	WETLAND PLAN	STD. NO. 410.1 / REV.

NOTE:

A 4–6 INCH LAYER OF AMENDED SOIL IS RECOMMENDED IN ANY AREA WHERE PLANTINGS ARE REQUIRED (SEE SOIL PARAMETERS IN NCDEQ STORMWATER BMP MANUAL.)

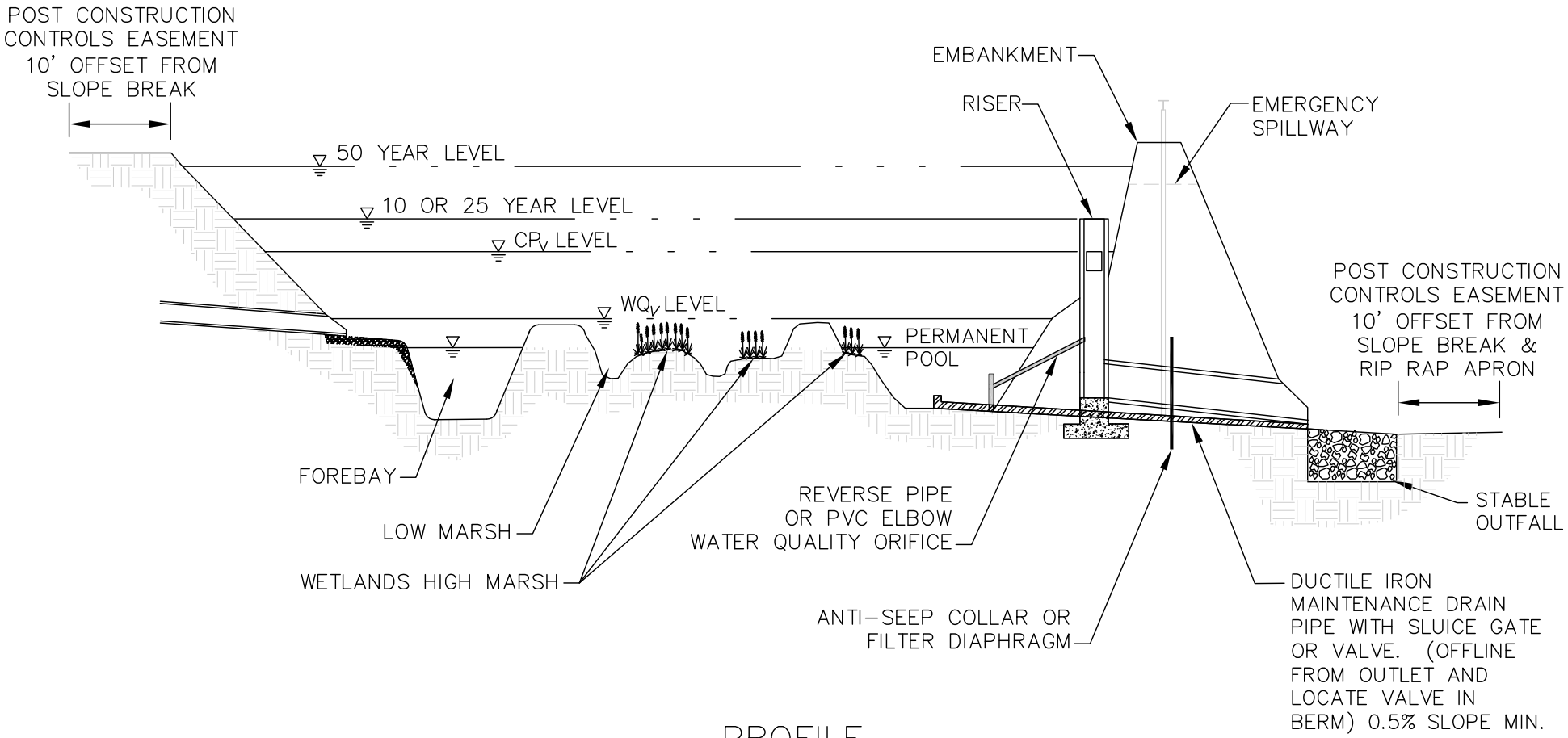

PROFILE

NOT TO SCALE

NOT TO SCALE

	TOWN OF WAXHAW LAND DEVELOPMENT STANDARDS	WETLAND PROFILE

STD. NO.	REV.
411.1	

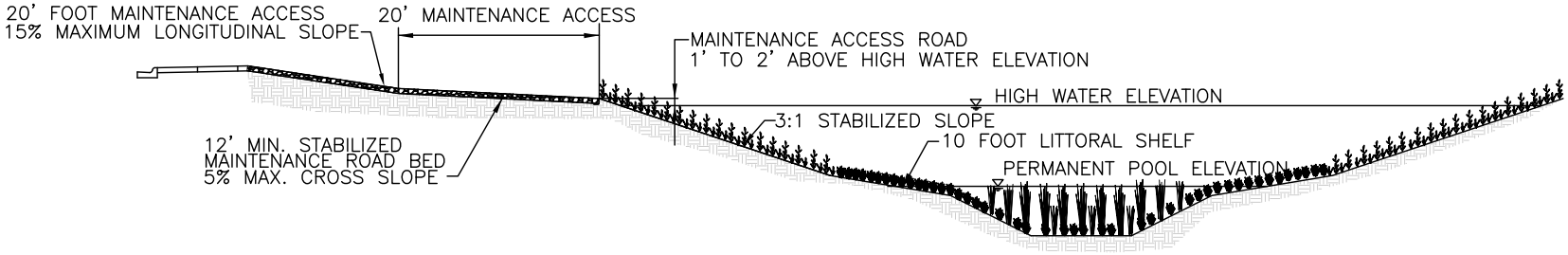

SECTION AT MAINTENANCE ROAD ACCESS AND FOREBAY

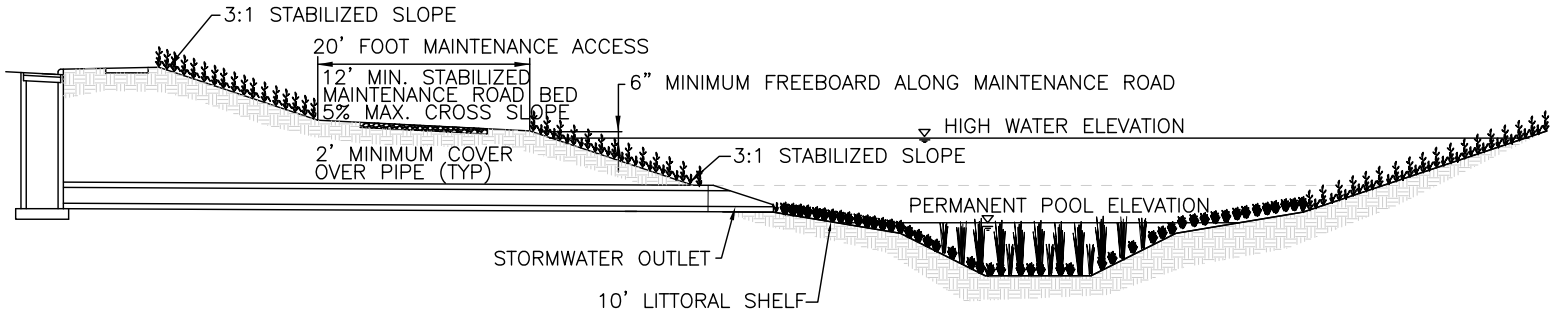

SECTION AT STORMWATER OUTFALL

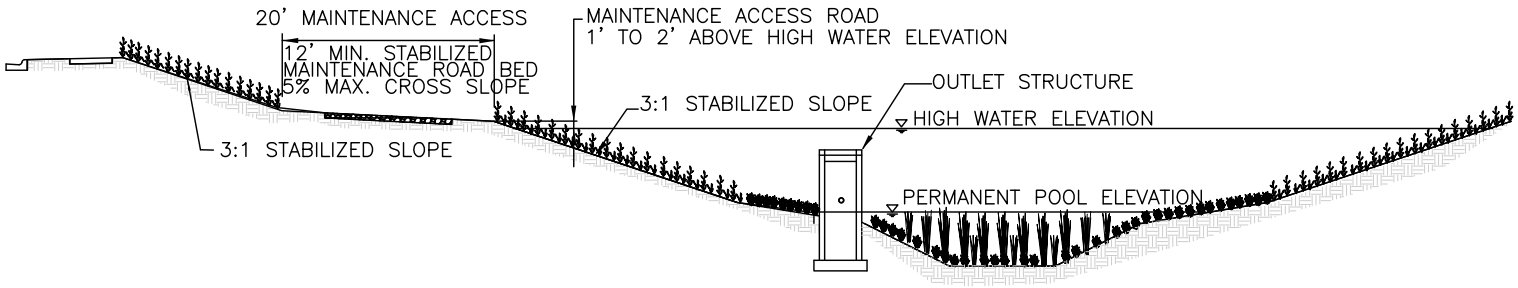

SECTION AT OUTLET STRUCTURE

NOT TO SCALE

	TOWN OF WAXHAW LAND DEVELOPMENT STANDARDS	WETLAND CROSS SECTIONS

STD. NO.	REV.
412.1	

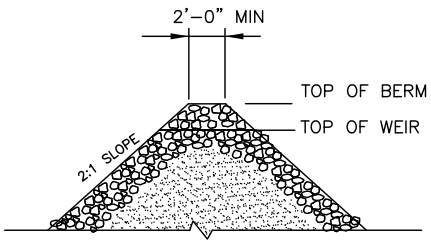

BERM AND WEIR SECTION

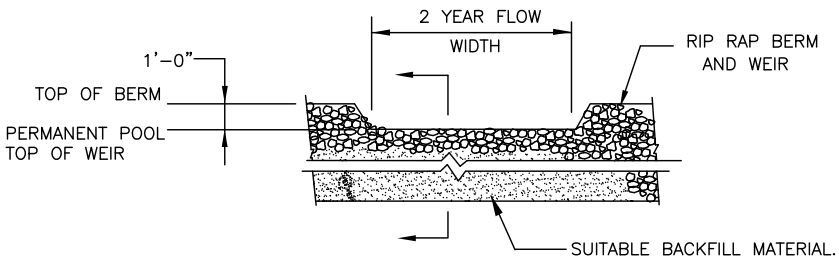

BERM AND WEIR DETAIL

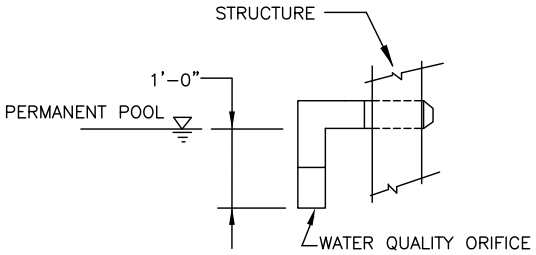

WATER QUALITY ORIFICE DETAIL

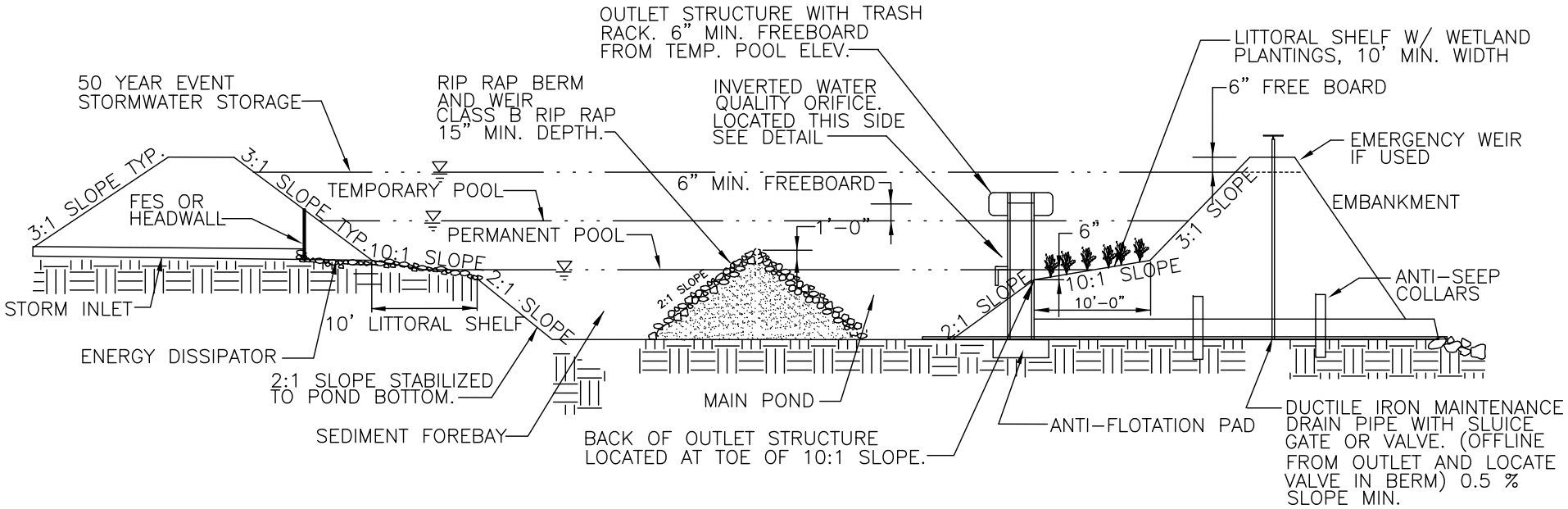

CROSS SECTION
NOT TO SCALE

NOT TO SCALE

	TOWN OF WAXHAW LAND DEVELOPMENT STANDARDS	WETLAND DETAILS

STD. NO.	REV.
413.1	

NOTES

1. PLANTINGS ZONES AND PLANT SELECTION PER THE BMP DESIGN MANUAL, CHAPTER 6 & APPENDICES.
2. ALL PLANTINGS SHALL BE LOCAL NATIVE SPECIES.
3. IRRIGATION MAY BE PROVIDED FOR INITIAL ESTABLISHMENT AND DRY SEASONS.

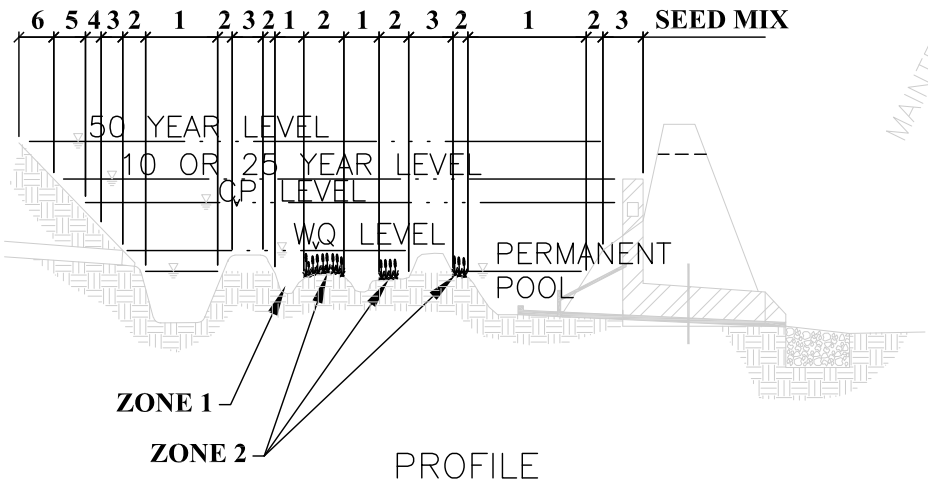

PROFILE
NOT TO SCALE

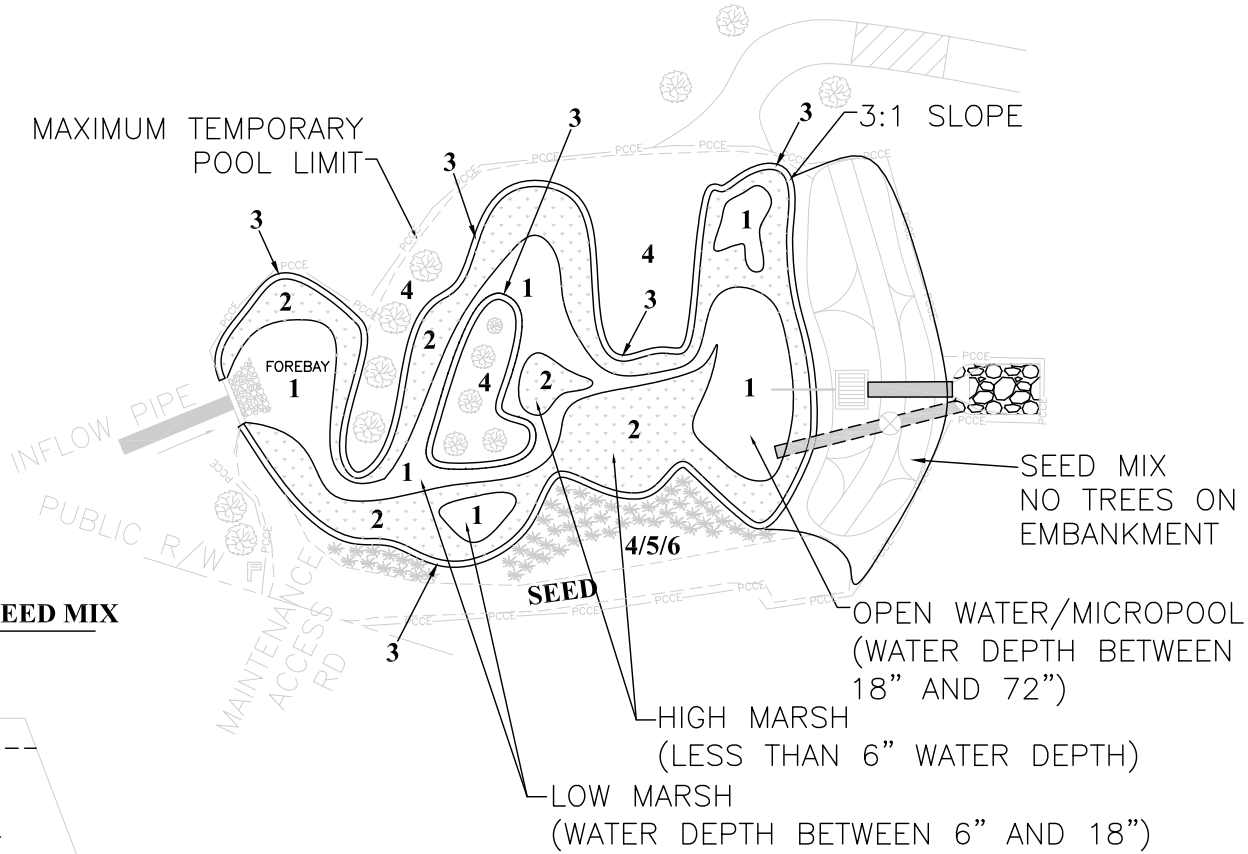

PLAN VIEW
NOT TO SCALE

NOT TO SCALE

	TOWN OF WAXHAW LAND DEVELOPMENT STANDARDS	WETLAND PLANTING PLAN	STD. NO. 414.1 / REV.

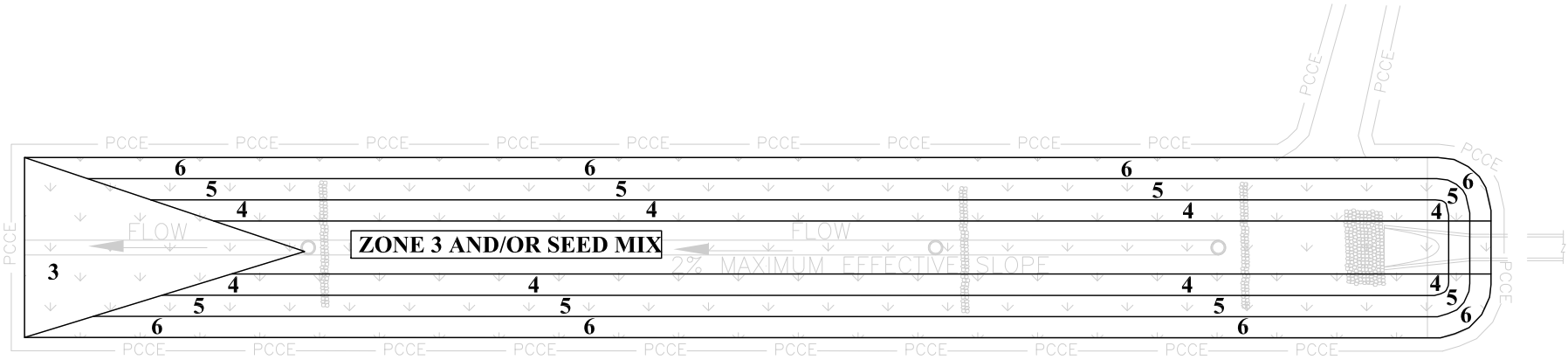

PLAN VIEW

NOTES

1. PLANTING ZONES AND PLANT SELECTION PER THE NCDEQ STORMWATER BMP MANUAL, CHAPTER 6 & APPENDICES.
2. ALL PLANTINGS SHALL BE LOCAL NATIVE SPECIES.
3. IRRIGATION MAY BE PROVIDED FOR INITIAL ESTABLISHMENT AND DRY SEASONS.

NOT TO SCALE

TOWN OF WAXHAW LAND DEVELOPMENT STANDARDS	ENHANCED GRASS SWALE PLANTING PLAN	STD. NO. 415.1	REV.

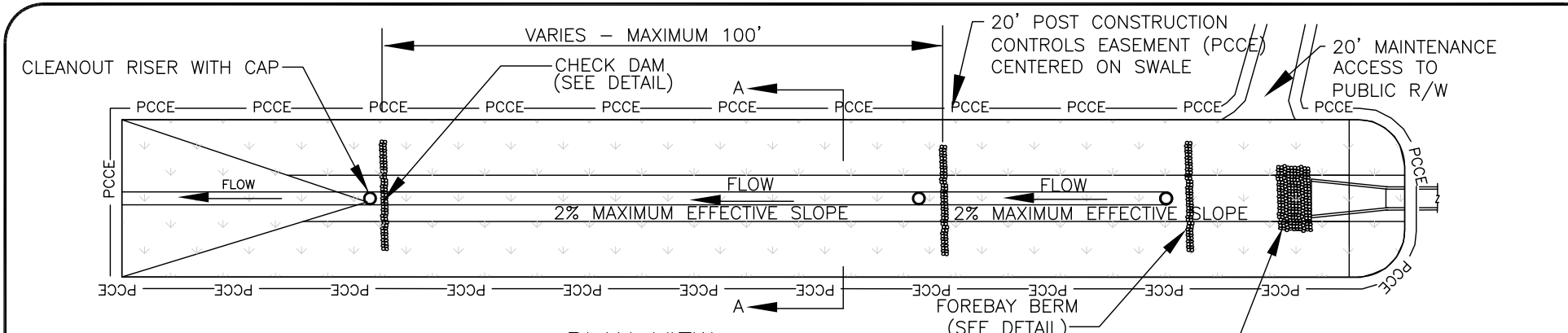

PLAN VIEW

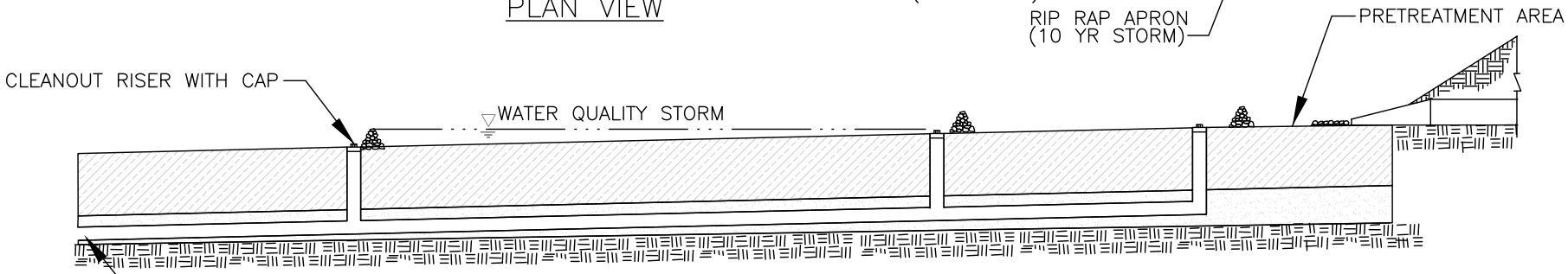

PROFILE

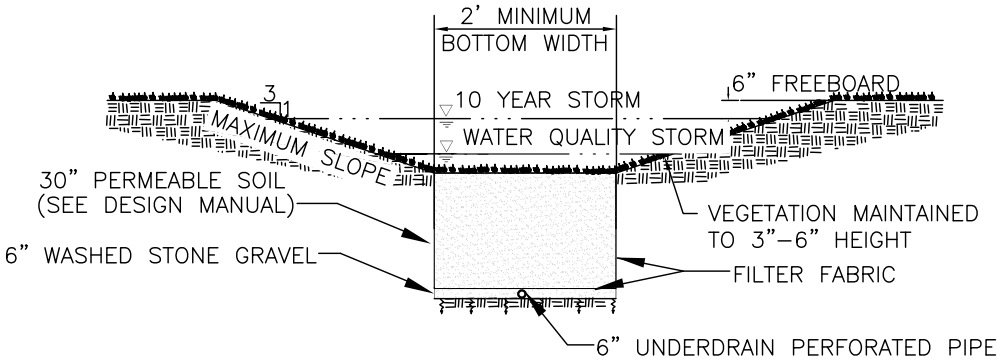

SECTION A–A

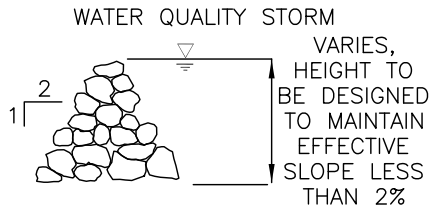

CHECK DAM AND FOREBAY BERM DETAIL

NOTES:

1. ALL ENHANCED GRASS SWALES SHALL HAVE A MINIMUM 20–FOOT ACCESS EASEMENT CONNECTING TO A DEDICATED PUBLIC RIGHT OF WAY. ACCESS ROAD SHALL HAVE MIN. 12' STABILIZED WIDTH, MAX. LONG. GRADE OF 15%, MAX. CROSS–SLOPE 5%.

NOT TO SCALE

	TOWN OF WAXHAW LAND DEVELOPMENT STANDARDS	ENHANCED GRASS SWALE DETAILS

STD. NO.	REV.
416.1	

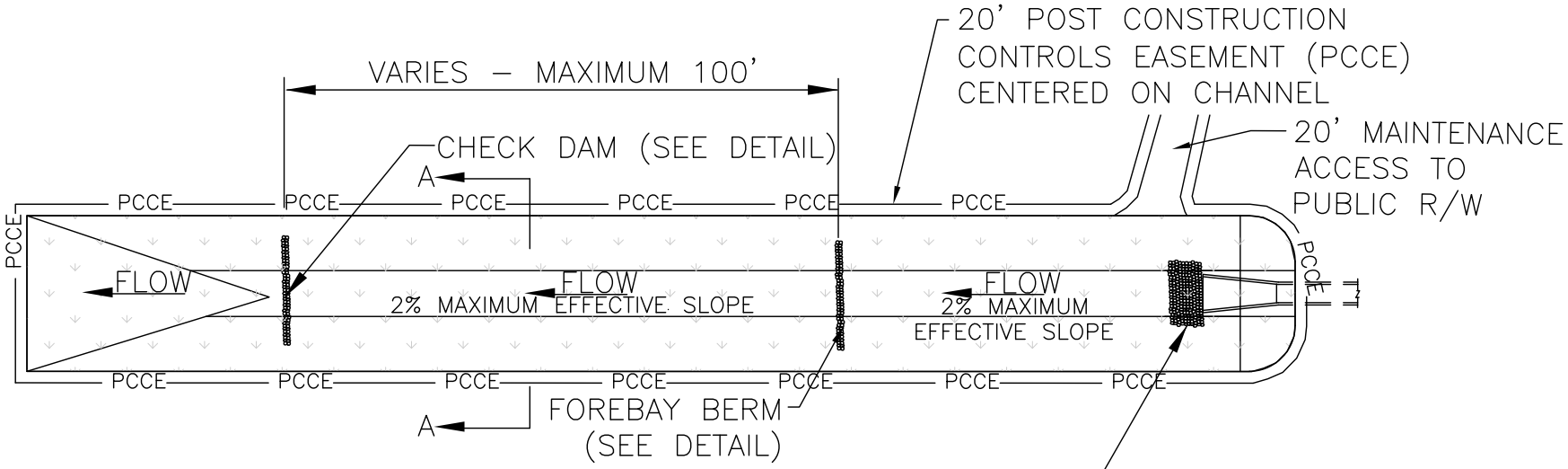

PLAN

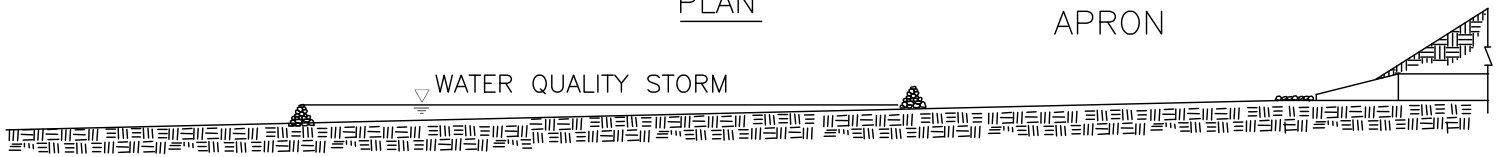

PROFILE

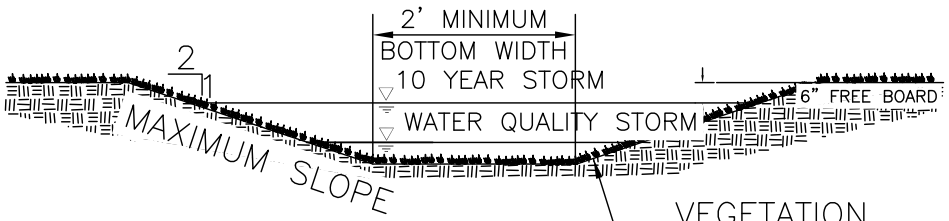

SECTION A–A

VEGETATION MAINTAINED TO 3"–6" HEIGHT

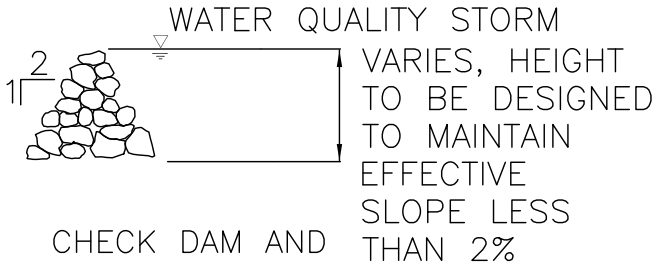

CHECK DAM AND FOREBAY BERM DETAIL

NOTES:

1. CONNECT GRASS SWALE EASEMENT TO A DEDICATED PUBLIC RIGHT OF WAY WITH A 20–FOOT ACCESS EASEMENT.

NOT TO SCALE

	TOWN OF WAXHAW LAND DEVELOPMENT STANDARDS	GRASS CHANNEL

STD. NO.	REV.
417.1	

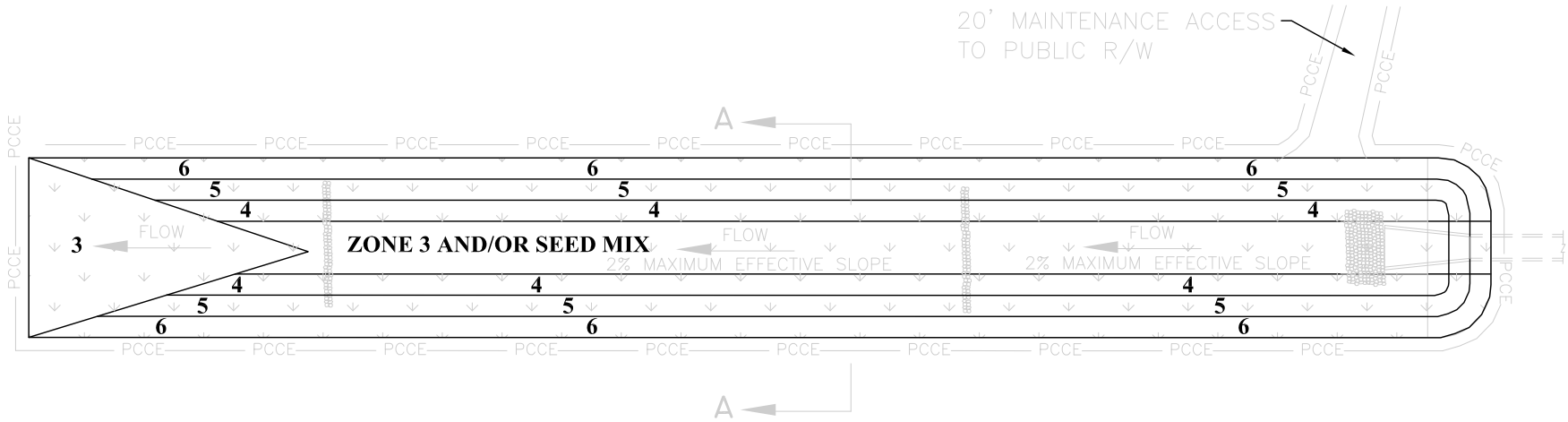

PLAN VIEW
NOT TO SCALE

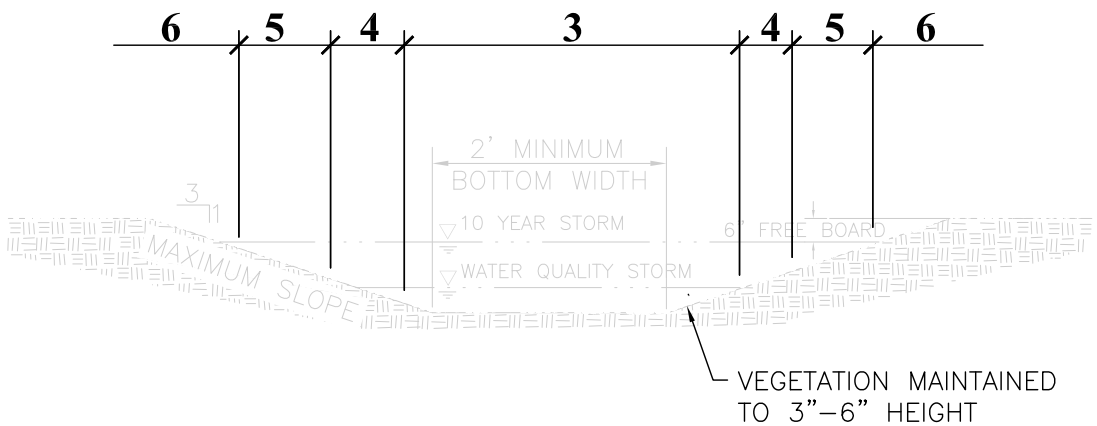

SECTION A–A
NOT TO SCALE

NOT TO SCALE

	TOWN OF WAXHAW LAND DEVELOPMENT STANDARDS	GRASS CHANNEL PLANTING PLAN	STD. NO. 418.1 / REV.

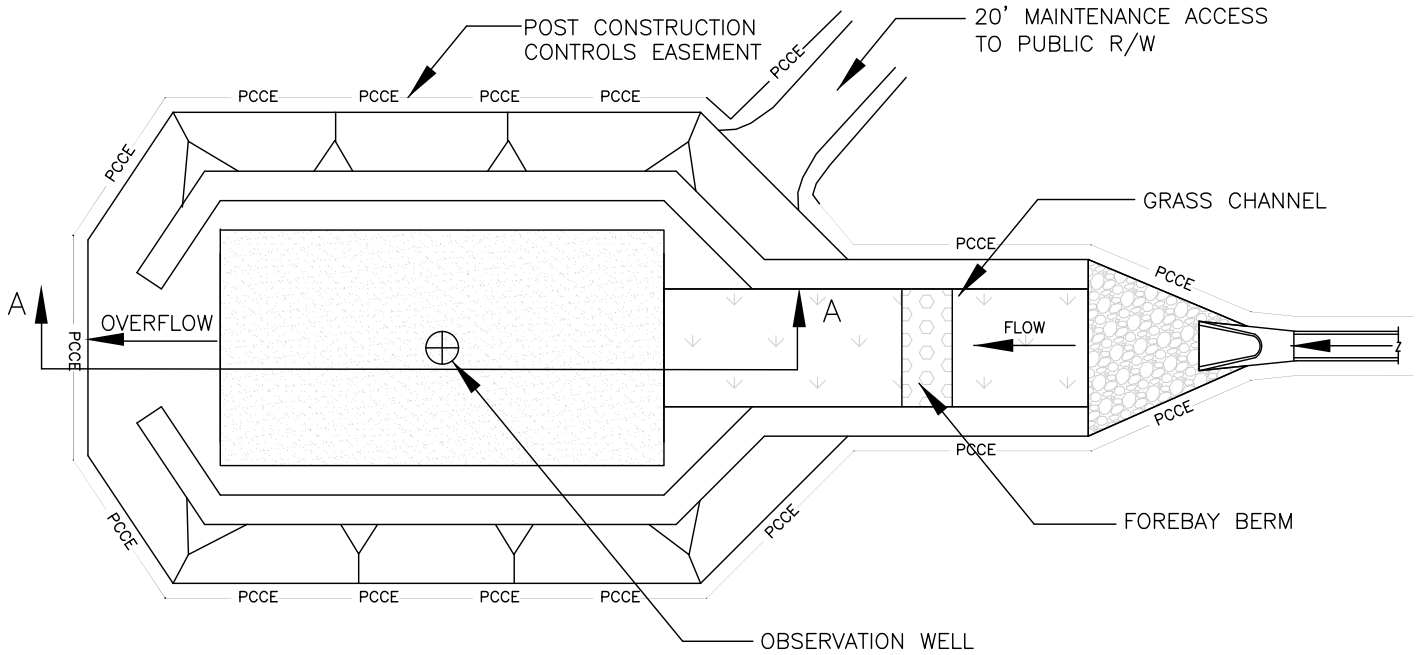

PLAN
NOT TO SCALE

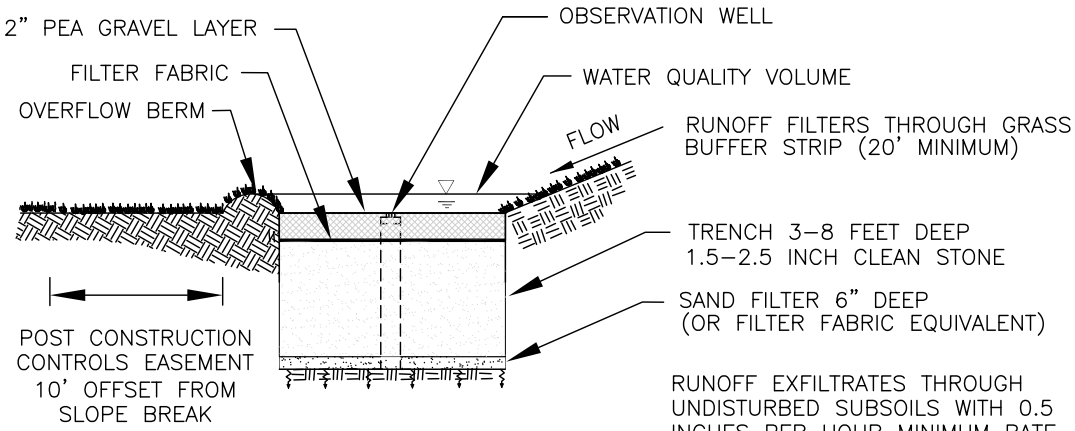

SECTION A–A
NOT TO SCALE

NOT TO SCALE

NOTES:

1. CONNECT INFILTRATION TRENCH EASEMENT TO A DEDICATED PUBLIC RIGHT OF WAY WITH A 20–FOOT ACCESS EASEMENT.
2. 5 ACRE MAXIMUM DRAINAGE AREA.

	TOWN OF WAXHAW LAND DEVELOPMENT STANDARDS	INFILTRATION TRENCH	STD. NO. 419.1 / REV.

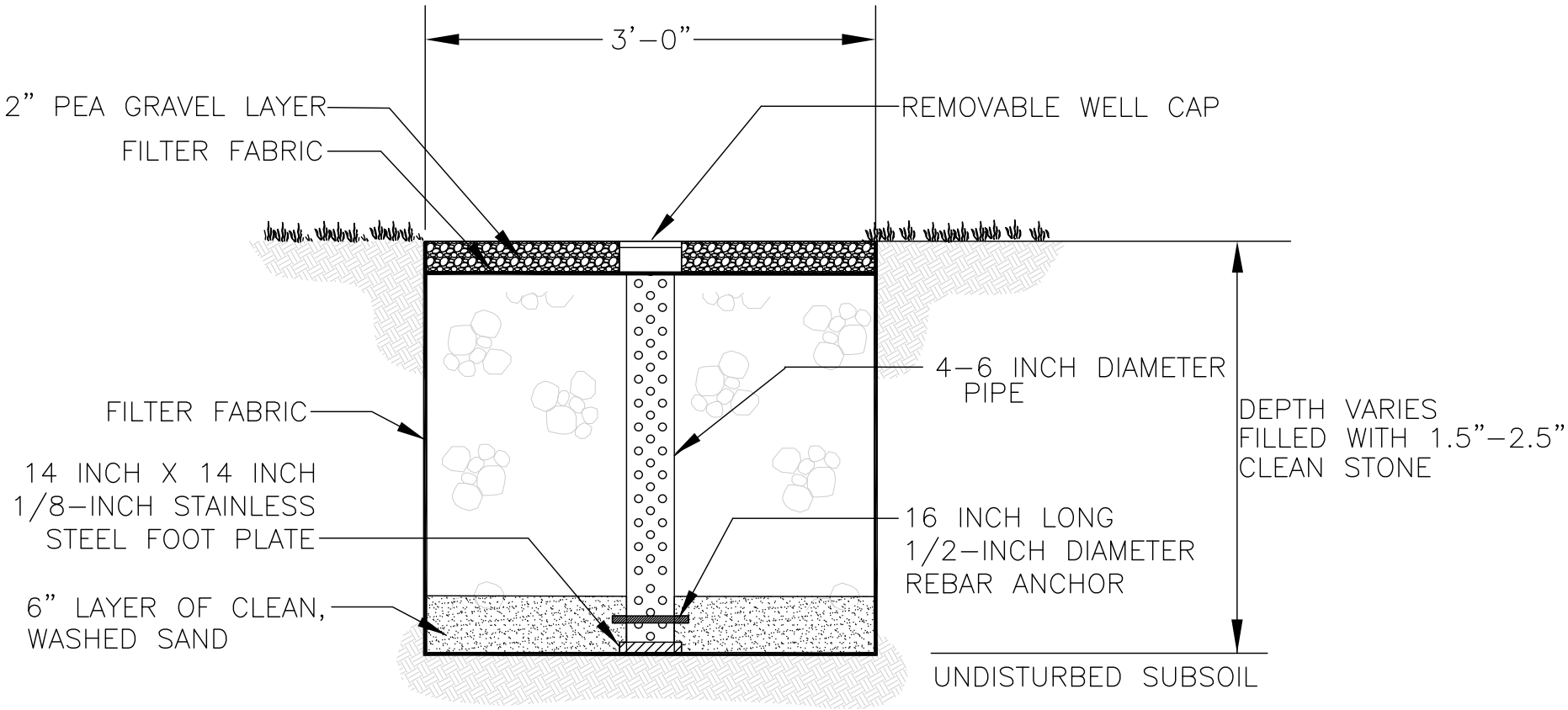

PERFORATION HOLES TO BE 1/2 INCH DIAMETER AT 3 INCH MINIMUM VERTICAL SPACING

NOT TO SCALE

	TOWN OF WAXHAW LAND DEVELOPMENT STANDARDS	OBSERVATION WELL STD. NO. 420.1 REV.

NOTES:

1. MAXIMUM SLOPE 2% FOR FILTER STRIP AND 5% FOR BUFFER STRIP.
2. 5 ACRE MAXIMUM DRAINAGE AREA.
3. ALL FILTER/BUFFER STRIPS SHALL HAVE A MINIMUM 20 FOOT ACCESS EASEMENT CONNECTING TO A DEDICATED PUBLIC RIGHT OF WAY. ACCESS ROAD SHALL HAVE MIN. 12' STABILIZED WIDTH, MAX. LONG. GRADE OF 15%, MAX. CROSS-SLOPE 5%.

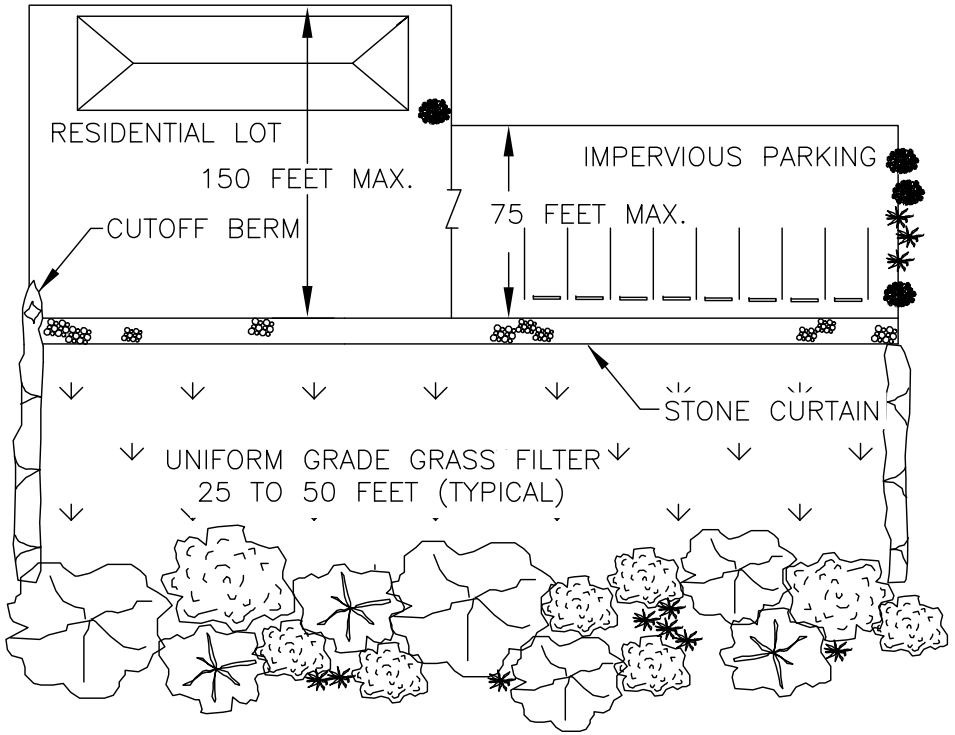

PLAN

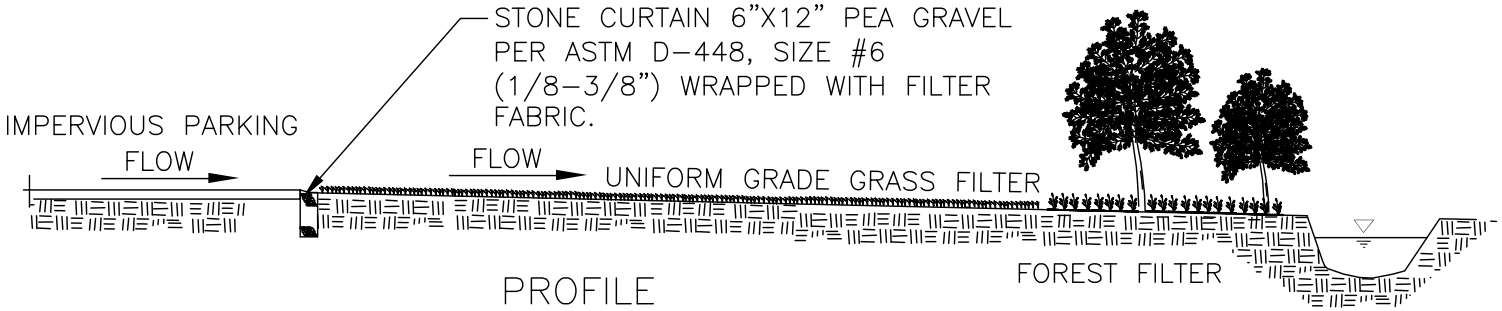

PROFILE

NOT TO SCALE

	TOWN OF WAXHAW LAND DEVELOPMENT STANDARDS	BUFFER STRIP	STD. NO. 421.1 / REV.

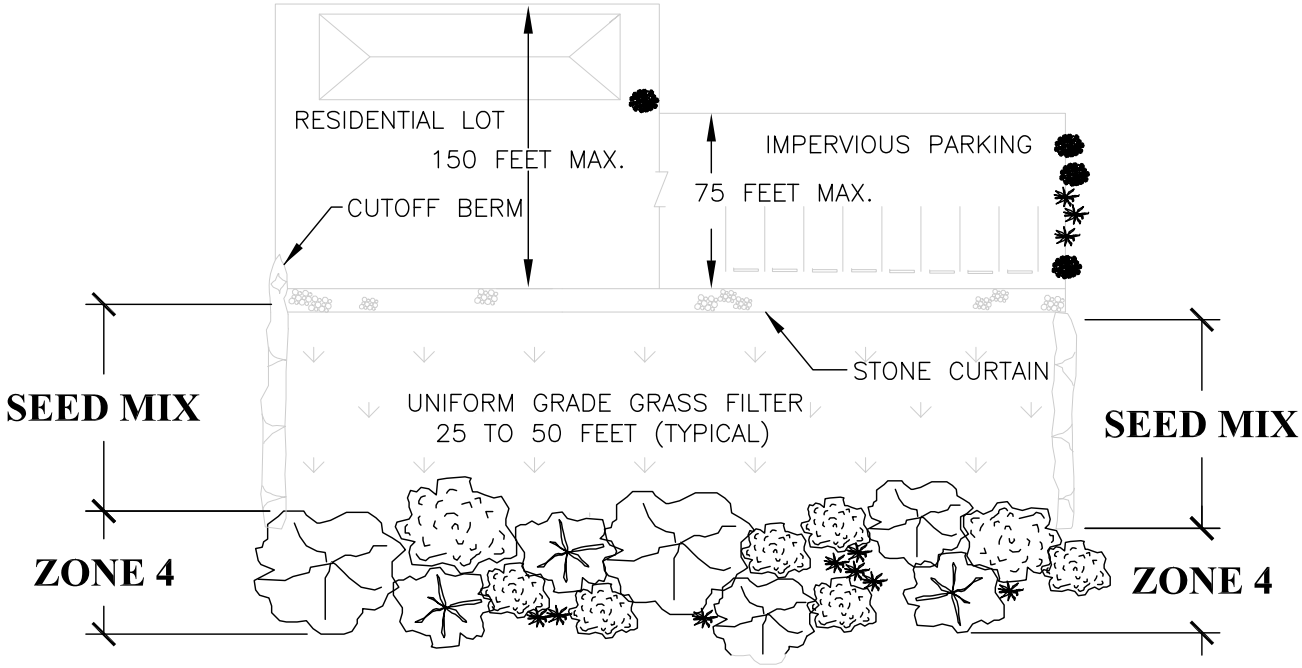

PLAN
NOT TO SCALE

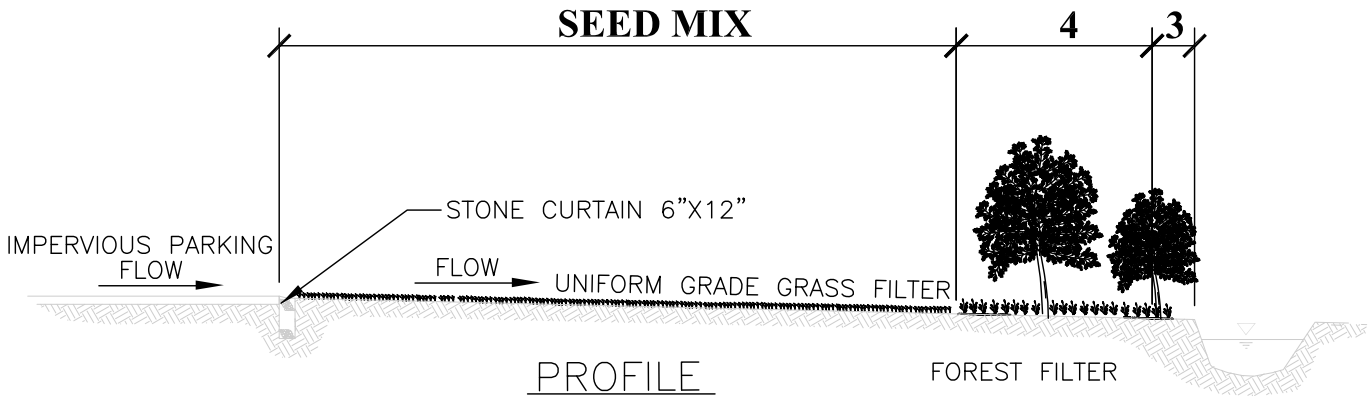

PROFILE
NOT TO SCALE

NOT TO SCALE

	TOWN OF WAXHAW LAND DEVELOPMENT STANDARDS	BUFFER STRIP PLANTING PLAN	STD. NO. 422.1 / REV.

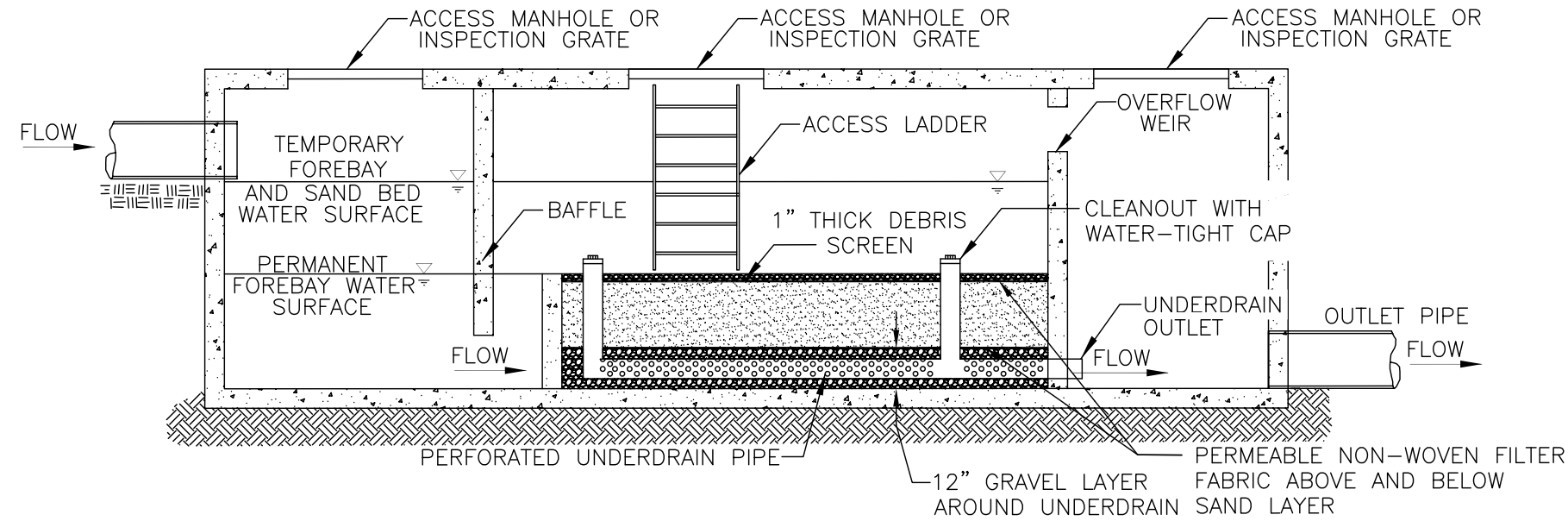

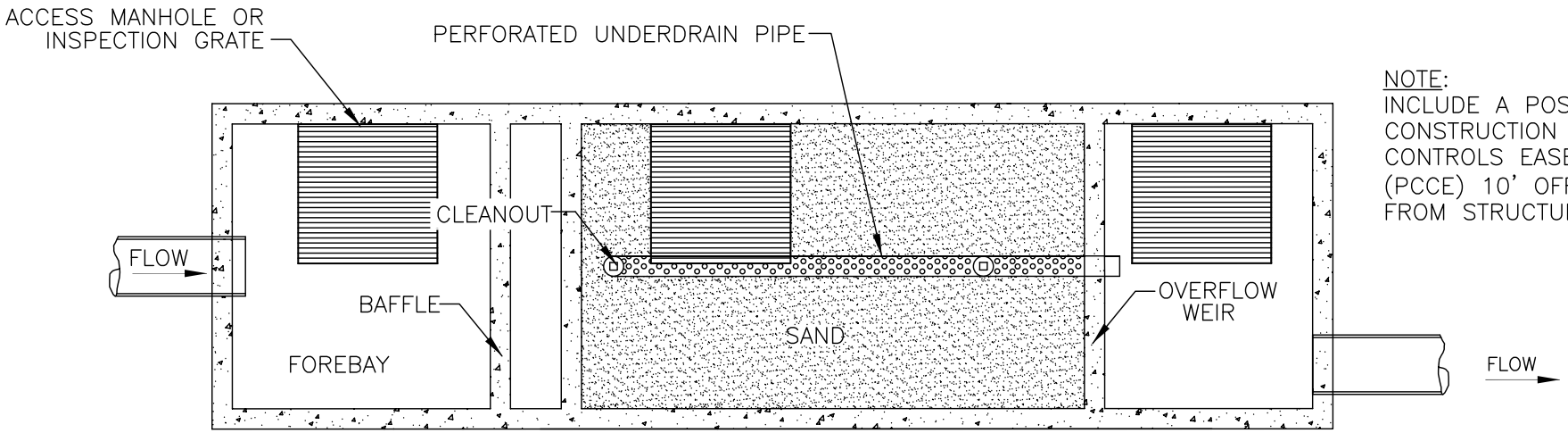

NOTE:
INCLUDE A POST CONSTRUCTION CONTROLS EASEMENT (PCCE) 10' OFFSET FROM STRUCTURE

TOWN OF WAXHAW LAND DEVELOPMENT STANDARDS	UNDERGROUND SAND FILTER	STD. NO. 423.1 / REV.

NOTES:

1. ALL SAND FILTERS SHALL HAVE A MINIMUM 20 FOOT ACCESS EASEMENT CONNECTING TO A DEDICATED PUBLIC RIGHT OF WAY. ACCESS ROAD SHALL HAVE MIN. 12' STABILIZED WIDTH, MAX. LONG. GRADE OF 15%, MAX. CROSS-SLOPE 5%. IN ADDITION, A 10-FOOT WIDE PERMANENT MAINTENANCE ACCESS EASEMENT MUST BE PROVIDED AROUND THE PERIMETER OF ALL BMPS TO ALLOW FOR ADEQUATE MAINTENANCE AND REPAIR.

2. ALL DRAINAGE AREAS TO A SAND FILTER FACILITY ARE TO BE STABILIZED PRIOR TO INSTALLATION OF SAND.

3. CLEAN OUTS IN THE UNDERDRAIN SYSTEM ARE TO BE PROVIDED EVERY 50' MINIMUM. CLEAN OUTS SHALL HAVE WATER TIGHT, VANDAL PROOF CAPS AND EXTEND 6" ABOVE THE SURFACE.

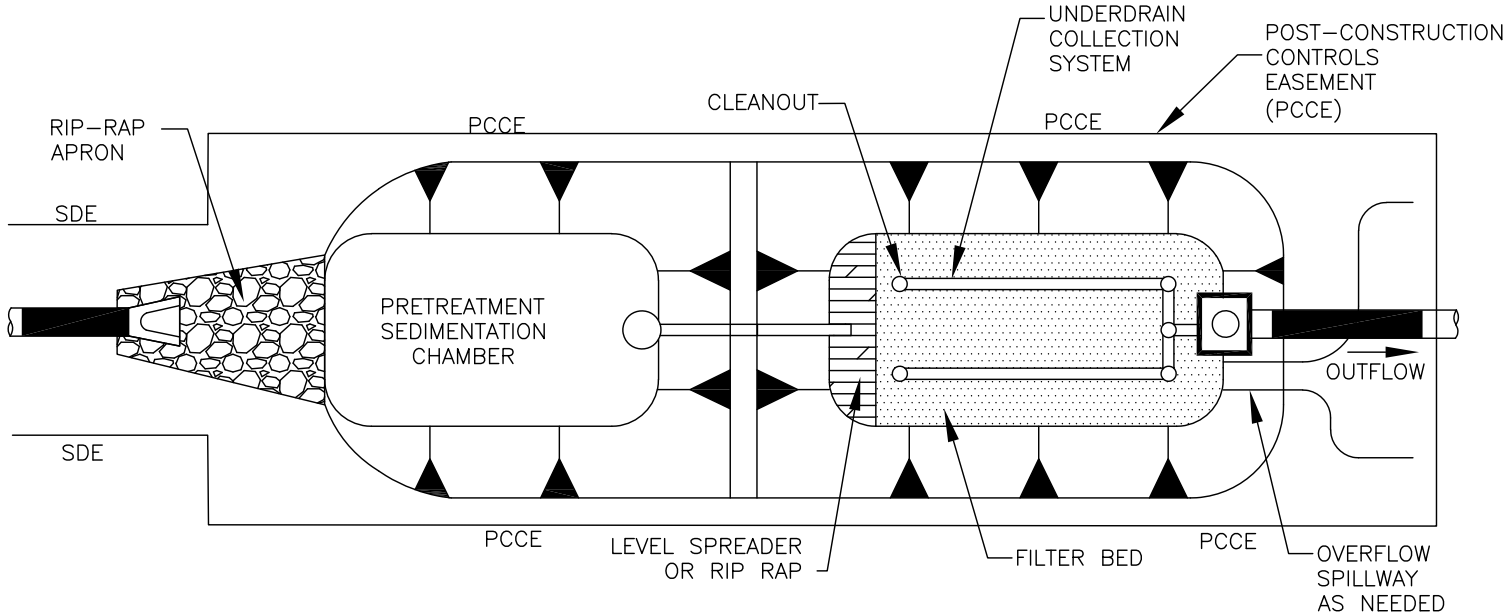

PLAN VIEW

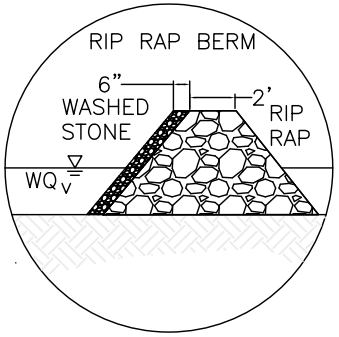

INSET

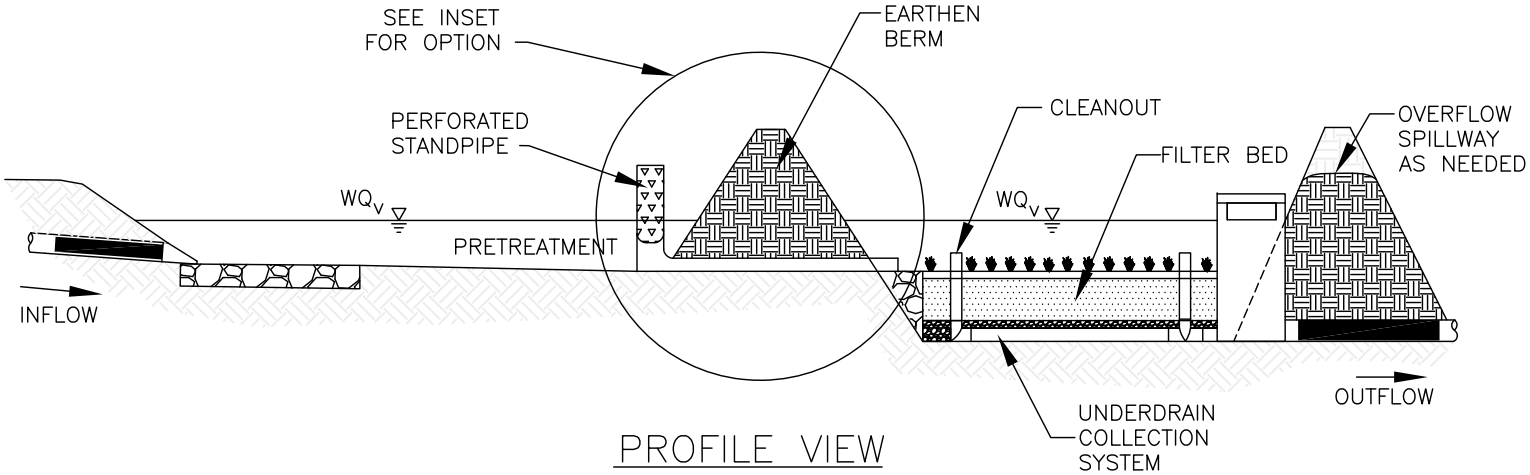

PROFILE VIEW

	TOWN OF WAXHAW LAND DEVELOPMENT STANDARDS	SURFACE SAND FILTER	NOT TO SCALE STD. NO. 424.1 REV.

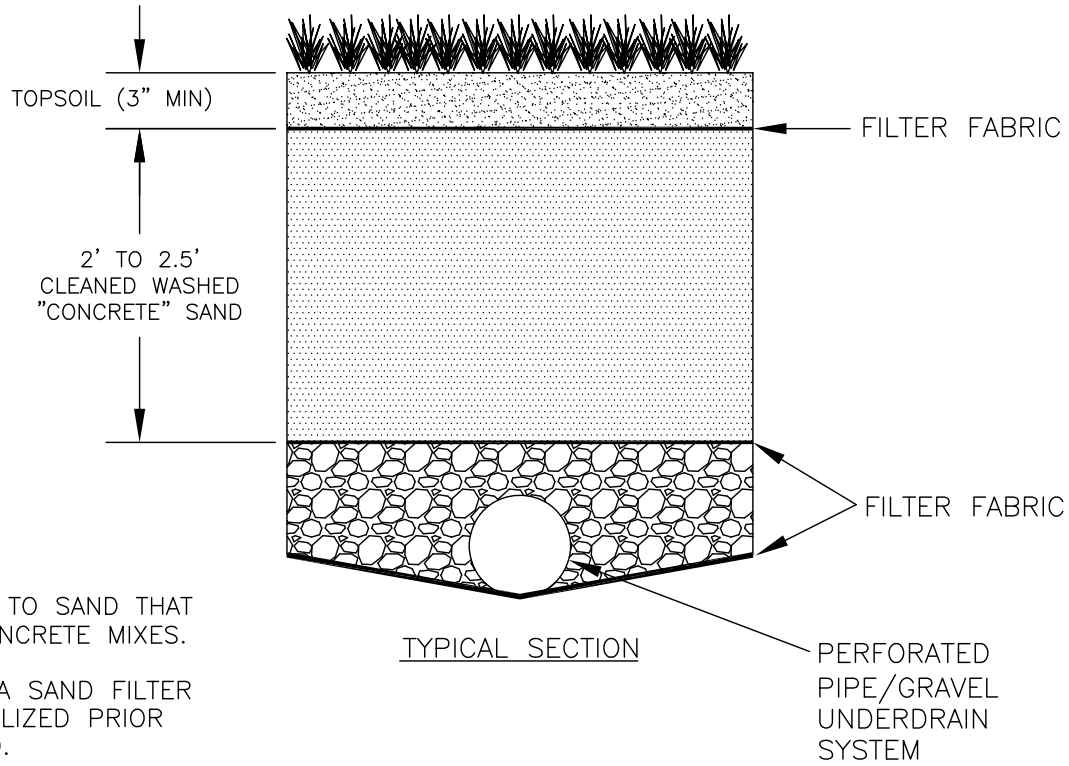

TYPICAL SECTION

NOTES:

1. "CONCRETE" SAND REFERS TO SAND THAT IS COMMONLY USED IN CONCRETE MIXES.
2. ALL DRAINAGE AREAS TO A SAND FILTER FACILITY ARE TO BE STABILIZED PRIOR TO INSTALLATION OF SAND.
3. UNDERDRAIN PIPES SHOULD BE MIN. 6" PERFORATED SCHEDULE 40 PVC (PER AASHTO M278) OR DOUBLE WALL HDPE (PER AASHTO M252). PERFORATIONS SHOULD BE ⅜" SPACED 3" ON CENTER ALONG 4 LONGITUDINAL ROWS SPACED 90° APART.

	TOWN OF WAXHAW LAND DEVELOPMENT STANDARDS	SURFACE SAND FILTER SECTION	STD. NO. 425.1 / REV.

STD. & SPEC. #	TITLE	SPECIAL REQUIREMENTS & NOTES
6.11	PERMANENT SEEDING	—
6.17	ROLLED EROSION CONTROL PRODUCTS	—
6.51	HARDWARE CLOTH & GRAVEL INLET PROTECTION	—
6.60	TEMPORARY SEDIMENT TRAP	WEIR TOP WIDTH 10' MIN., BOTTOM 7' MIN.
6.61	SEDIMENT BASIN	FLASH BOARD RISER NOT PERMITTED
6.64	SKIMMER SEDIMENT BASIN	1ST BAFFLE: RIP RAP & WASHED STONE BERM 2ND BAFFLE: STANDARD BAFFLE 3RD BAFFLE: HARDWARE CLOTH SURROUNDING THE SKIMMER
NCDOT 1606.1	SPECIAL SEDIMENT CONTROL FENCE	—

THE STANDARDS & SPECIFICATIONS SHOWN ARE FROM THE "NORTH CAROLINA EROSION AND SEDIMENT CONTROL PLANNING AND DESIGN MANUAL" (NCESCPDM) PREPARED BY NC DEPT. OF ENVIRONMENT AND NATURAL RESOURCES (NCDENR); ALSO REFERENCE NCDOT "ROADWAY STANDARD DRAWINGS," LATEST EDITION.

THE TOWN OF WAXHAW HAS ADOPTED THE SPECIFIC STANDARDS & SPECIFICATIONS SHOWN ON THIS DETAIL AS MANDATORY MINIMUM DESIGN STANDARDS & SPECIFICATIONS.

TEMPORARY SEDIMENT TRAP DESIGN CRITERIA	
DRAINAGE AREA (ACRES)	< 1 AC.
MIN. LENGTH TO WIDTH RATIO	2:1
MIN. VOLUME REQUIRED	3600 (CU. FT. PER AC. DISTURBED)
SURFACE AREA REQUIRED	435 (SQ. FT. PER CFS Q10)

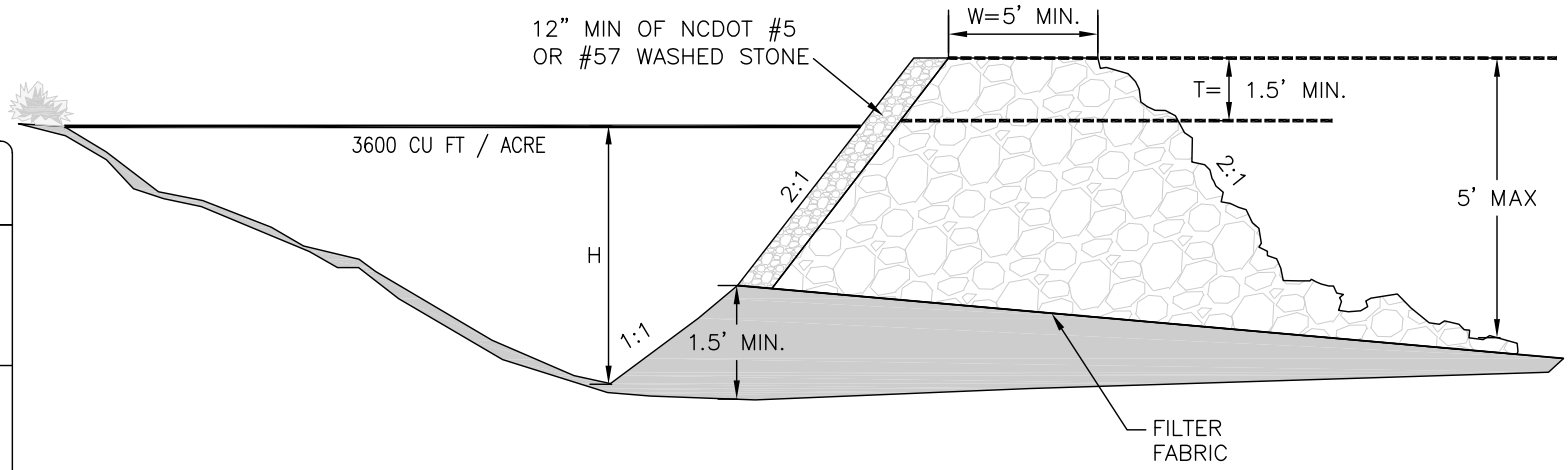

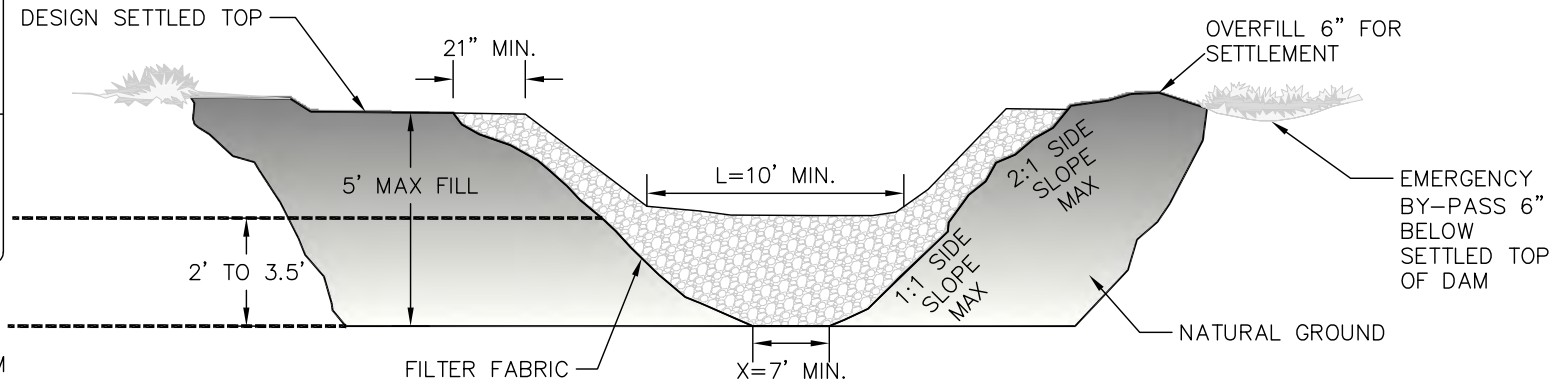

NOTE:

PLEASE REFER TO NCESCPDM SECTION #6.60 FOR ADDITIONAL DESIGN SPECIFICATIONS REGARDING TEMPORARY SEDIMENT TRAPS.

NOT TO SCALE

DATA BLOCK

TRAP NO.	DRAINAGE AREA (ACRES)	DENUDED AREA (ACRES)	Q_{10}	TRAP VOLUME		TRAP SURFACE AREA		CLEANOUT DEPTH (FT.) H/2	H (FEET)	L (FEET)	T (FEET)	W (FEET)	X (FEET)
				REQUIRED (CUBIC FT.)	PROVIDED (CUBIC FT.)	REQUIRED (SQ FT.)	PROVIDED (SQ FT.)						

TOWN OF WAXHAW
LAND DEVELOPMENT STANDARDS

TEMPORARY SEDIMENT TRAP

STD. NO. 501.1 REV.

SKIMMER SEDIMENT BASIN DESIGN CRITERIA	
DRAINAGE AREA (ACRES)	< 10 AC.
MIN. LENGTH TO WIDTH RATIO	2:1
MAX. LENGTH TO WIDTH RATIO	6:1
MIN. VOLUME REQUIRED	1800 (CU. FT. PER AC. DISTURBED)
SURFACE AREA REQUIRED	325 (SQ. FT. PER CFS Q10)

PLAN VIEW

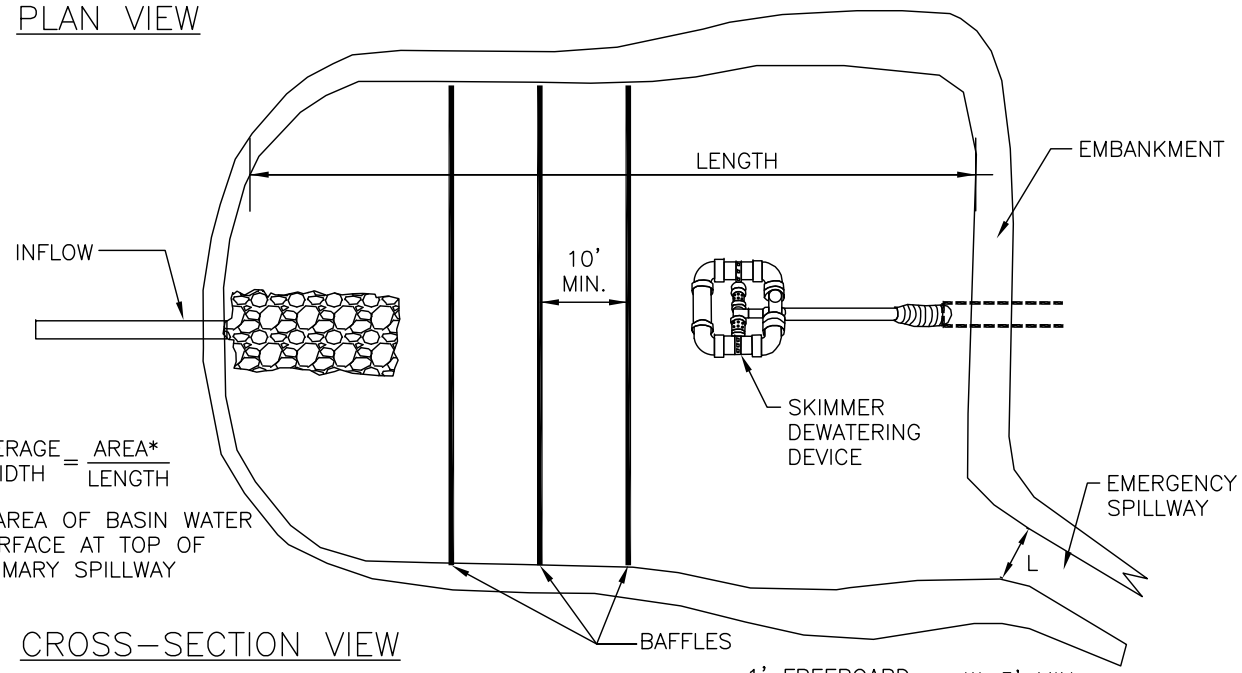

$$\text{AVERAGE WIDTH} = \frac{\text{AREA*}}{\text{LENGTH}}$$

* AREA OF BASIN WATER SURFACE AT TOP OF PRIMARY SPILLWAY

CROSS-SECTION VIEW

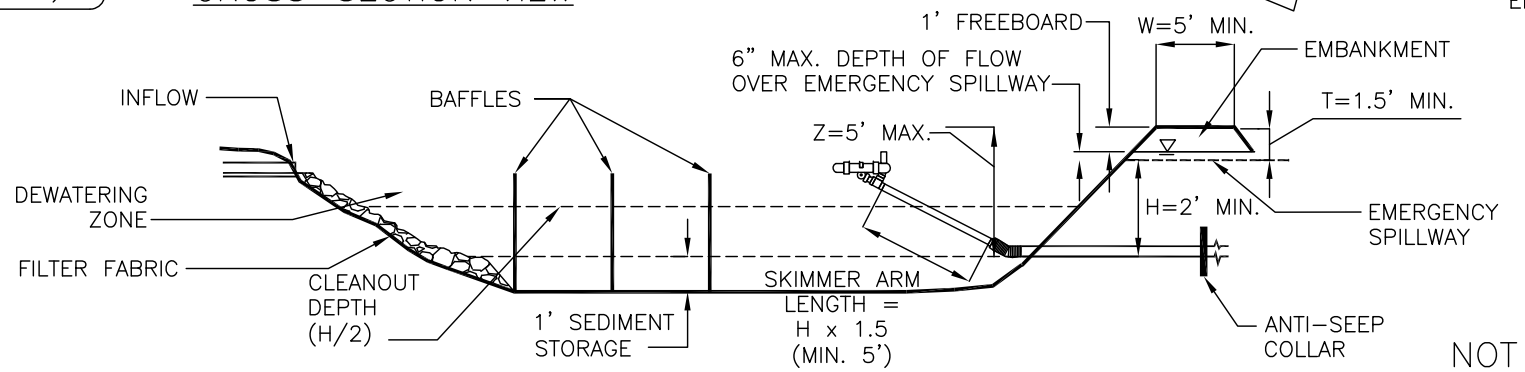

NOTES:

1. REFER TO NCESCPDM SECTION #6.64 FOR ADDITIONAL DESIGN SPECIFICATIONS REGARDING SKIMMER SEDIMENT BASINS.
2. REFER TO STD. #524.1 FOR BAFFLE SPACING AND INSTALLATION
3. SKIMMER INVERT ELEVATION = BASIN BOTTOM + 1' MIN.
4. H = SPILLWAY ELEVATION – SKIMMER INVERT ELEVATION

NOT TO SCALE

DATA BLOCK

BASIN	DRAINAGE AREA (ACRES)	DENUDED AREA (ACRES)	Q_{10}	BASIN VOLUME		BASIN SURFACE AREA		CLEANOUT DEPTH (FT.) H/2	H (FEET)	Z (FEET)	L (FEET)	T (FEET)	W (FEET)	SKIMMER PIPE DIAMETER	SKIMMER ORIFICE DIAMETER
				REQUIRED (CUBIC FT.)	PROVIDED (CUBIC FT.)	REQUIRED (SQ FT.)	PROVIDED (SQ FT.)								

TOWN OF WAXHAW
LAND DEVELOPMENT STANDARDS

SKIMMER SEDIMENT BASIN

STD. NO.	REV.
502.1	

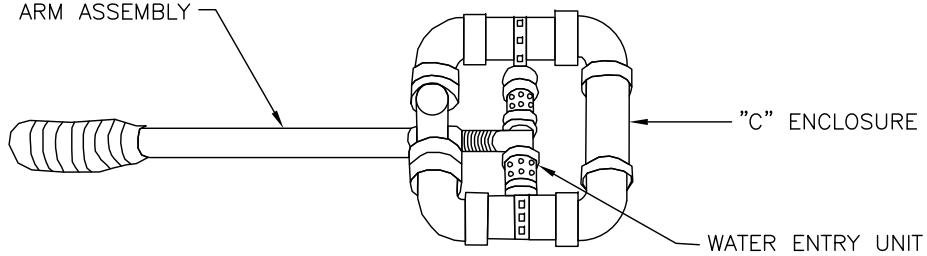

PERSPECTIVE VIEW

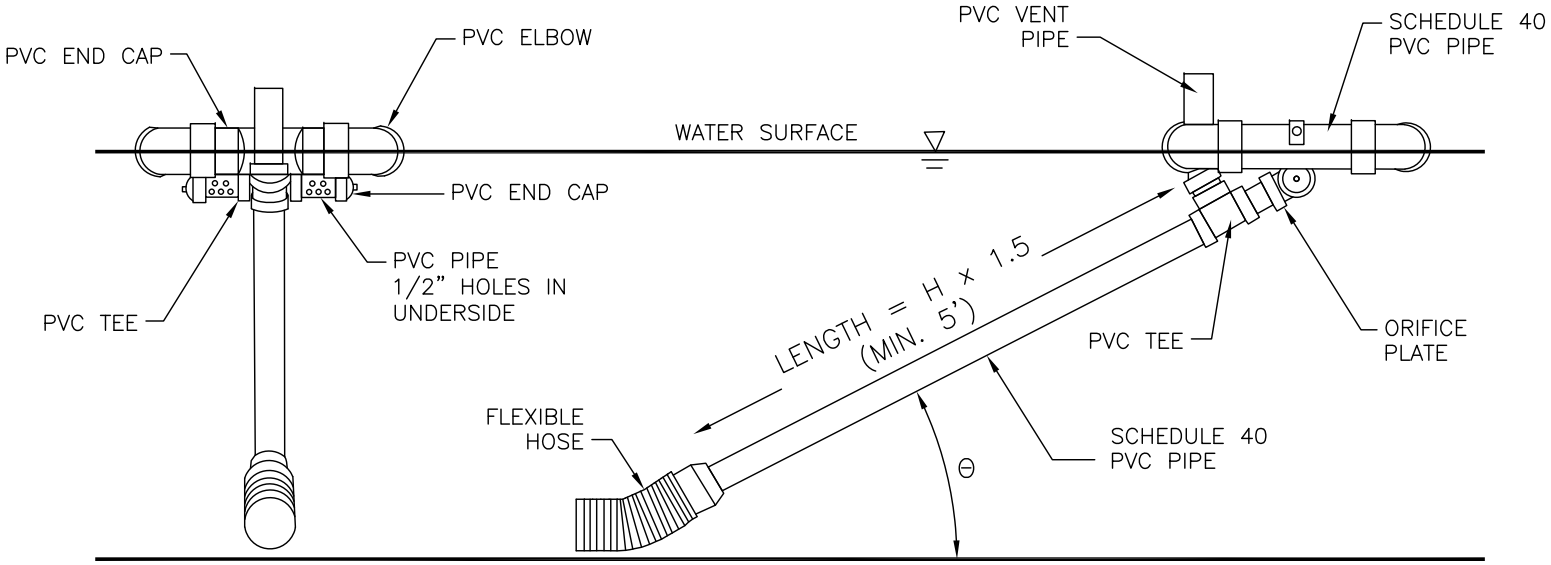

END VIEW

FRONT VIEW

SCHEMATIC OF SKIMMER TAKEN FROM PENNSYLVANIA EROSION AND SEDIMENT POLLUTION CONTROL MANUAL, MARCH 2000.

"H" REFERS TO THE HEIGHT FROM INVERT OF FLEXIBLE HOSE ON SKIMMER TO THE INVERT OF THE PRIMARY SPILLWAY.

NOT TO SCALE

	TOWN OF WAXHAW LAND DEVELOPMENT STANDARDS	SKIMMER	STD. NO. 503.1 / REV.

SEDIMENT BASIN DESIGN CRITERIA	
DRAINAGE AREA (ACRES)	>10 AC. <100 AC.
MIN. LENGTH TO WIDTH RATIO	2:1
MAX. LENGTH TO WIDTH RATIO	6:1
MIN. VOLUME REQUIRED	1800 (CU. FT. PER AC. DISTURBED)
SURFACE AREA REQUIRED	435 (SQ. FT. PER CFS Q10)

PLAN VIEW

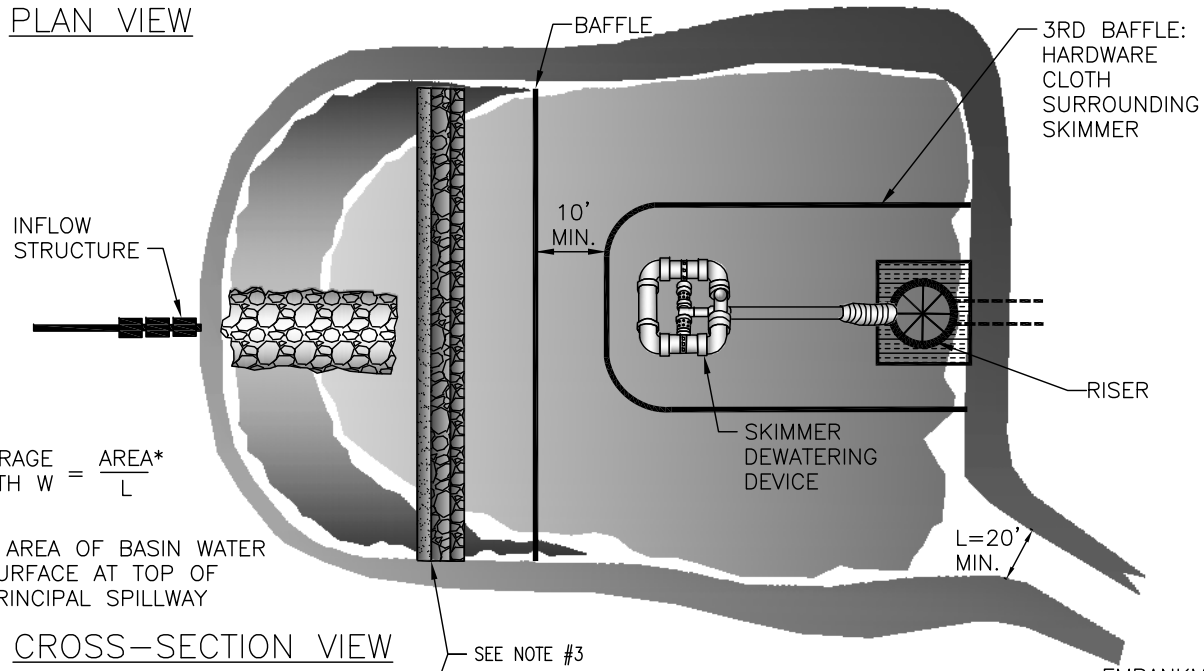

AVERAGE WIDTH W = AREA* / L

* AREA OF BASIN WATER SURFACE AT TOP OF PRINCIPAL SPILLWAY

CROSS-SECTION VIEW

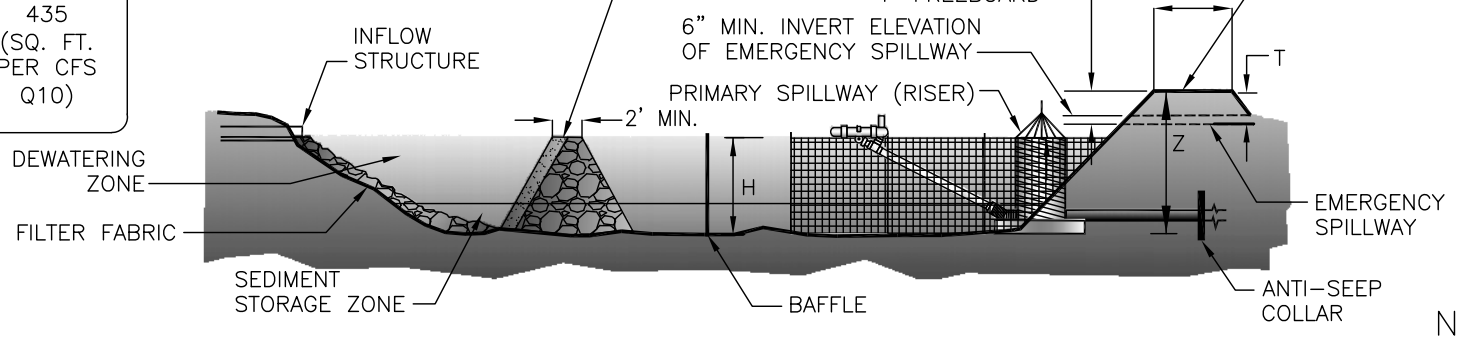

NOTES:

1. REFER TO NCESCPDM SECTION #6.61 FOR ADDITIONAL DESIGN SPECIFICATIONS REGARDING SEDIMENT BASINS.
2. REFER TO STD. #524.1 FOR BAFFLE SPACING AND INSTALLATION.
3. FIRST BAFFLE IS TO BE CONSTRUCTED OF RIP-RAP AND #5 WASHED STONE, WITH A MIN. HEIGHT OF 3' AND MIN. TOPWIDTH OF 2'.
4. FLASHBOARD RISER NOT PERMITTED FOR USE IN THE TOWN OF WAXHAW

NOT TO SCALE

DATA BLOCK

BASIN	DRAINAGE AREA (ACRES)	DENUDED AREA (ACRES)	Q_{10}	BASIN VOLUME		BASIN SURFACE AREA		CLEANOUT DEPTH (FT.) H/2	H (FEET)	Z (FEET)	L (FEET)	T (FEET)	W (FEET)	SKIMMER PIPE DIAMETER	SKIMMER ORIFICE DIAMETER
				REQUIRED (CUBIC FT.)	PROVIDED (CUBIC FT.)	REQUIRED (SQ FT.)	PROVIDED (SQ FT.)								

TOWN OF WAXHAW
LAND DEVELOPMENT STANDARDS

SEDIMENT BASIN

STD. NO. 504.1 | REV.

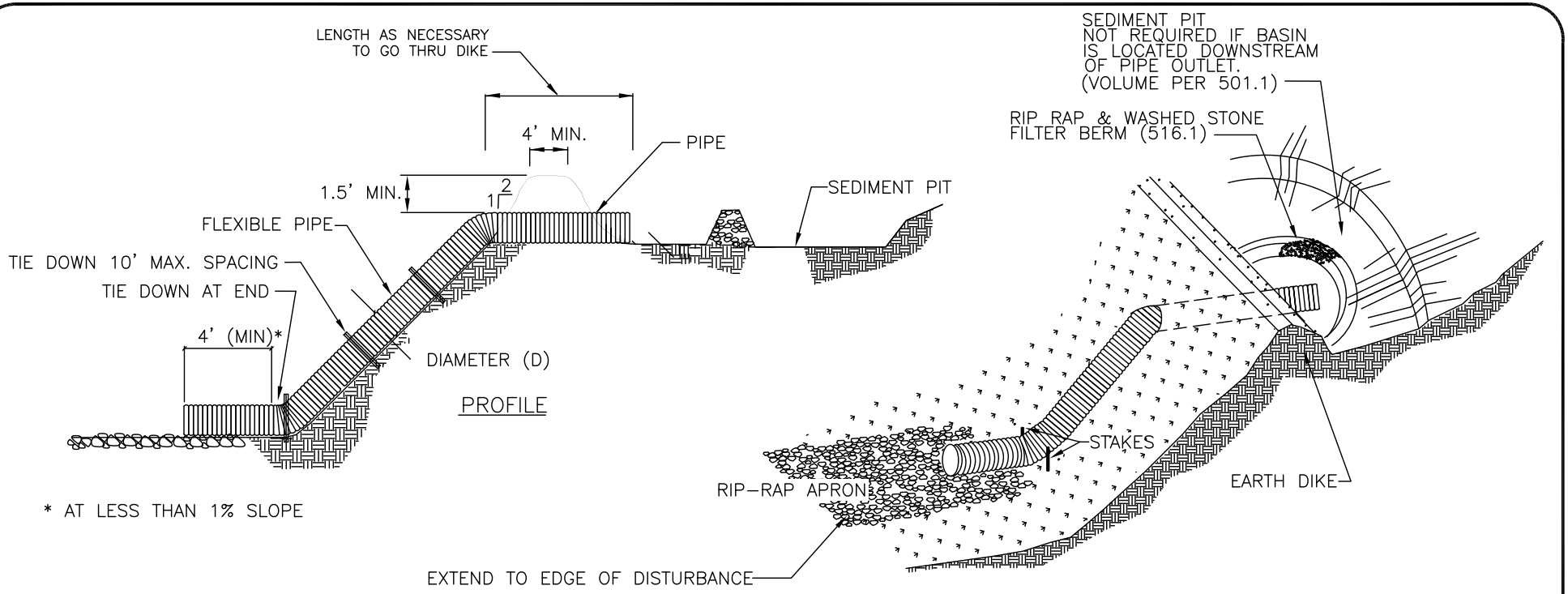

CONSTRUCTION SPECIFICATIONS:

1. THE TOP OF THE EARTH DIKE OVER THE INLET PIPE AND THOSE DIKES CARRYING WATER TO THE PIPE SHALL BE AT LEAST 1.5 FEET HIGHER AT ALL POINTS THAN THE TOP OF THE INLET PIPE.
2. THE PIPE SHALL BE FLEXIBLE WITH WATER TIGHT CONNECTING BANDS. FLEXIBLE PIPE SHOULD BE STAKED ON EITHER SIDE.
3. A RIP RAP APRON SHALL BE PROVIDED AT THE OUTLET, IF EMPTYING INTO A DISTURBED AREA.
4. THE SOIL AROUND AND UNDER THE INLET PIPE AND ENTRANCE SECTION SHALL BE HAND TAMPED IN 4" LIFTS TO THE TOP OF THE EARTH DIKE.
5. FOLLOW-UP INSPECTION AND ANY NEEDED MAINTENANCE SHALL BE PERFORMED AFTER EACH STORM BY THE FINANCIALLY RESPONSIBLE PARTY OR HIS AGENT.
6. OUTLET PIPE SHOULD BE TAKEN OVER OR THROUGH ANY SILT FENCE, TAKING CARE NOT TO VOID THE EFFECTIVENESS OF THE SILT FENCE.

NOT TO SCALE

TOWN OF WAXHAW LAND DEVELOPMENT STANDARDS	FLEXIBLE PIPE SLOPE DRAIN	STD. NO.	REV.
		505.1	

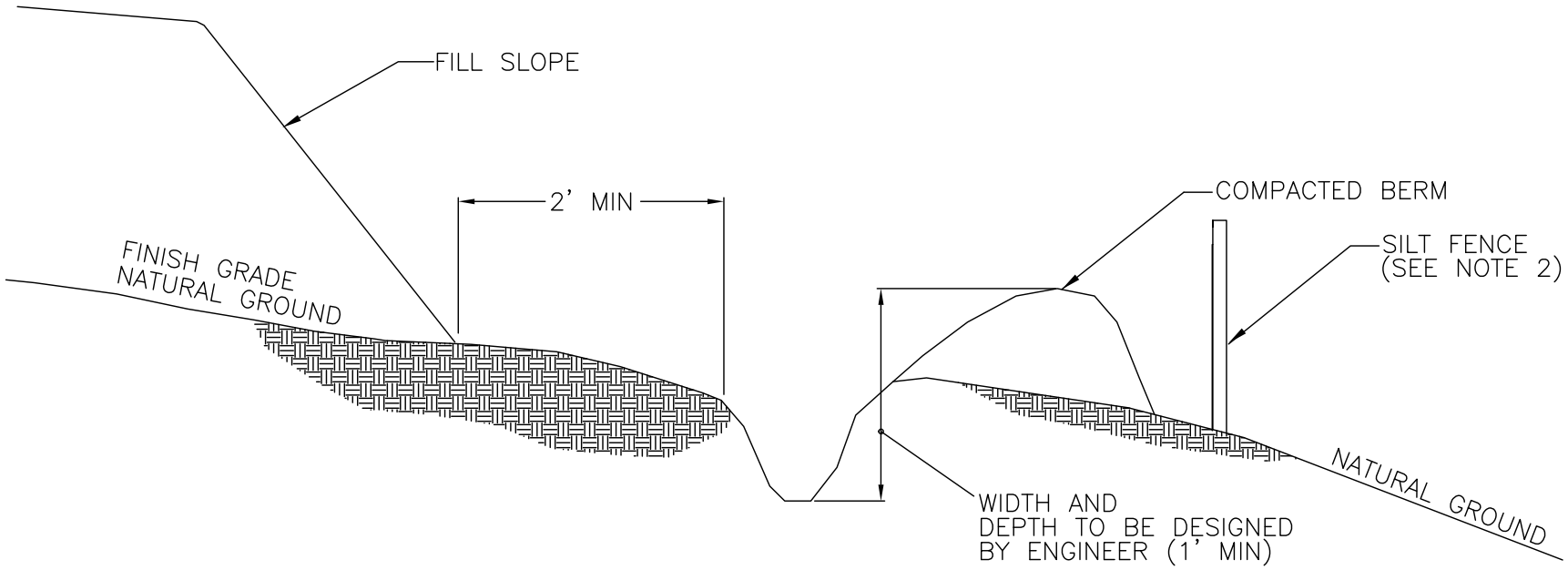

NOTE:

1. DITCH SHOULD HAVE LONGITUDINAL SLOPE OF 1%.
2. SILT FENCE MAY BE REQUIRED BEHIND BERM

NOT TO SCALE

	TOWN OF WAXHAW LAND DEVELOPMENT STANDARDS	TEMPORARY SILT DITCH	STD. NO. 506.1 / REV.

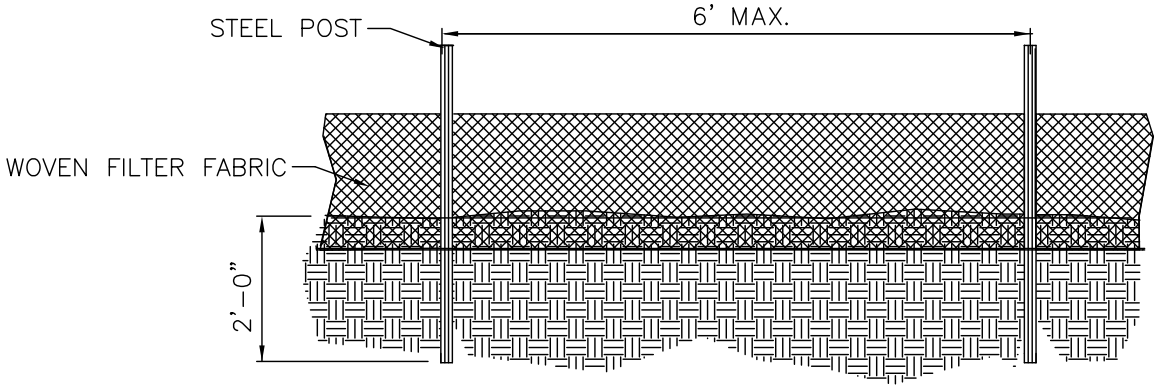

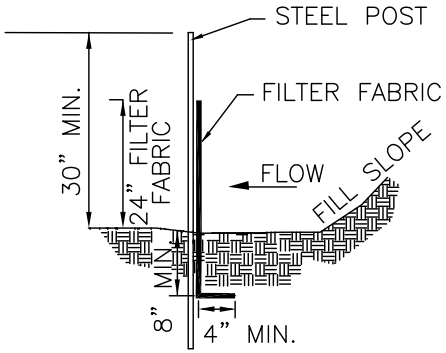

GENERAL NOTES:

1. WOVEN FILTER FABRIC BE USED WHERE SILT FENCE IS TO REMAIN FOR A PERIOD OF MORE THAN 30 DAYS.
2. STEEL POSTS SHALL BE 5'-0" IN HEIGHT AND BE OF THE SELF-FASTENER ANGLE STEEL TYPE.
3. TURN SILT FENCE UP SLOPE AT ENDS.
4. ORANGE SAFETY FENCE IS REQUIRED AT BACK OF SILT FENCE WHEN GRADING IS ADJACENT TO SWIM BUFFERS, STREAMS OR WETLANDS (REFER TO SWIM BUFFER GUIDELINES). THE COLOR ORANGE IS RESERVED FOR VISUAL IDENTIFICATION OF ENVIRONMENTALLY SENSITIVE AREAS.
5. DRAINAGE AREA CAN NOT BE GREATER THAN 1/4 ACRE PER 100 FT OF FENCE.
6. SLOPE LENGTHS CAN NOT EXCEED CRITERIA SHOWN IN TABLE 6.62A NORTH CAROLINA EROSION AND SEDIMENT CONTROL PLANNING AND DESIGN MANUAL.
7. DO NOT INSTALL SEDIMENT FENCE ACROSS STREAMS, DITCHES, WATERWAYS OR OTHER AREAS OF CONCENTRATED FLOW.

MAINTENANCE NOTES:

1. FILTER BARRIERS SHALL BE INSPECTED BY THE FINANCIALLY RESPONSIBLE PARTY OR HIS AGENT IMMEDIATELY AFTER EACH RAINFALL AND AT LEAST DAILY DURING PROLONGED RAINFALL. ANY REPAIRS NEEDED SHALL BE MADE IMMEDIATELY.
2. SHOULD THE FABRIC DECOMPOSE OR BECOME INEFFECTIVE PRIOR TO THE END OF THE EXPECTED USABLE LIFE AND THE BARRIER STILL IS NECESSARY, THE FABRIC SHALL BE REPLACED PROMPTLY.
3. SEDIMENT DEPOSITS SHOULD BE REMOVED WHEN DEPOSITS REACH APPROX. HALF THE HEIGHT OF THE BARRIER. ANY SEDIMENT DEPOSITS REMAINING IN PLACE AFTER THE SILT FENCE IS REMOVED SHALL BE DRESSED TO CONFORM TO THE EXISTING GRADE, PREPARED AND SEEDED.

NOT TO SCALE

TOWN OF WAXHAW LAND DEVELOPMENT STANDARDS	TEMPORARY SILT FENCE	STD. NO.	REV.
		507.1	

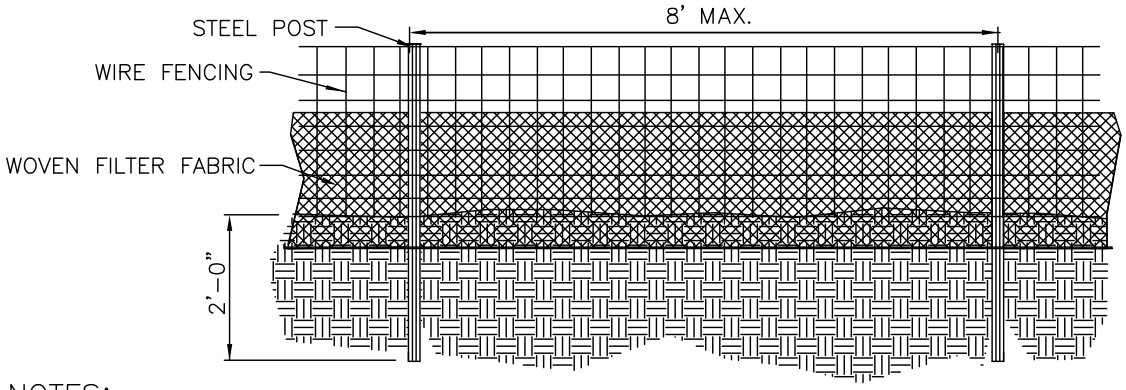

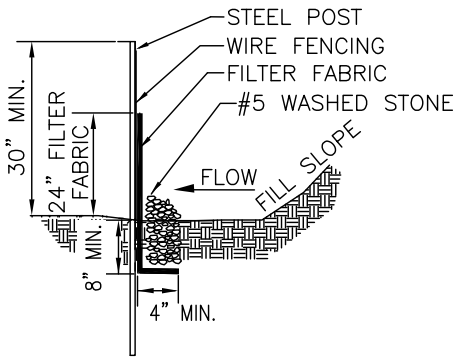

GENERAL NOTES:

1. WIRE FENCING SHALL BE A MINIMUM OF 32" IN WIDTH AND SHALL HAVE A MINIMUM OF 6 LINE WIRES WITH 12" STAY SPACING.
2. WOVEN FILTER FABRIC SHALL BE USED WHERE SILT FENCE IS TO REMAIN FOR A PERIOD OF MORE THAN 30 DAYS.
3. STEEL POSTS SHALL BE 5'-0" IN HEIGHT AND BE OF THE SELF-FASTENER ANGLE STEEL TYPE.
4. WIRE FENCING SHALL BE AT LEAST #10 GAGE WITH A MINIMUM OF 6 LINE WIRES WITH 12" STAY SPACING.
5. TURN SILT FENCE UP SLOPE AT ENDS.
6. WIRE MESH SHALL BE MIN. 13 GAGE WITH MAXIMUM 12" OPENINGS.
7. WIRE AND WASHED STONE IS REQUIRED TO BE SHOWN ON PLANS AT THE TOE OF SLOPES GREATER THAN 10 FEET VERTICAL (2:1 SLOPE)
8. ORANGE SAFETY FENCE IS REQUIRED AT BACK OF SILT FENCE WHEN GRADING IS ADJACENT TO SWIM BUFFERS, STREAMS OR WETLANDS (REFER TO SWIM BUFFER GUIDELINES). THE COLOR ORANGE IS RESERVED FOR VISUAL IDENTIFICATION OF ENVIRONMENTALLY SENSITIVE AREAS.
9. DRAINAGE AREA CAN NOT BE GREATER THAN 1/4 ACRE PER 100 FT OF FENCE.
10. SLOPE LENGTHS CAN NOT EXCEED CRITERIA SHOWN IN TABLE 6.62A NORTH CAROLINA EROSION AND SEDIMENT CONTROL PLANNING AND DESIGN MANUAL.
11. DO NOT INSTALL SEDIMENT FENCE ACROSS STREAMS, DITCHES, WATERWAYS OR OTHER AREAS OF CONCENTRATED FLOW.

MAINTENANCE NOTES:

1. FILTER BARRIERS SHALL BE INSPECTED BY THE FINANCIALLY RESPONSIBLE PARTY OR HIS AGENT IMMEDIATELY AFTER EACH RAINFALL AND AT LEAST DAILY DURING PROLONGED RAINFALL. ANY REPAIRS NEEDED SHALL BE MADE IMMEDIATELY.
2. SHOULD THE FABRIC DECOMPOSE OR BECOME INEFFECTIVE PRIOR TO THE END OF THE EXPECTED USABLE LIFE AND THE BARRIER STILL IS NECESSARY, THE FABRIC SHALL BE REPLACED PROMPTLY.
3. SEDIMENT DEPOSITS SHOULD BE REMOVED WHEN DEPOSITS REACH HALF THE HEIGHT OF THE BARRIER. ANY SEDIMENT DEPOSITS REMAINING IN PLACE AFTER THE SILT FENCE IS REMOVED SHALL BE DRESSED TO CONFORM TO THE EXISTING GRADE, PREPARED AND SEEDED.

NOT TO SCALE

	TOWN OF WAXHAW LAND DEVELOPMENT STANDARDS	HIGH HAZARD TEMPORARY SILT FENCE	STD. NO. 508.1 / REV.

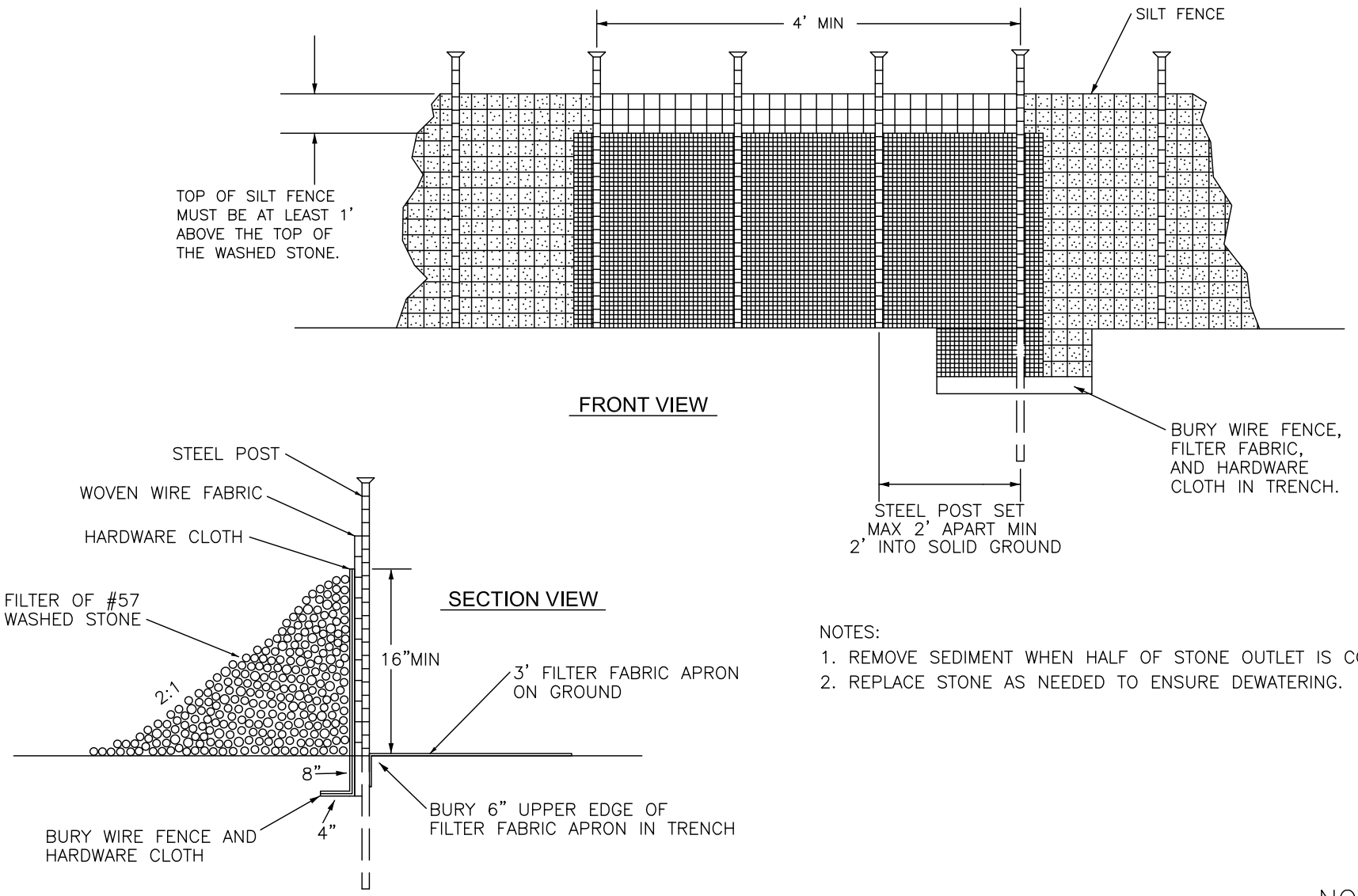

NOTES:

1. REMOVE SEDIMENT WHEN HALF OF STONE OUTLET IS COVERED.
2. REPLACE STONE AS NEEDED TO ENSURE DEWATERING.

NOT TO SCALE

	TOWN OF WAXHAW LAND DEVELOPMENT STANDARDS	STANDARD SILT FENCE OUTLET	STD. NO. 509.1 / REV.

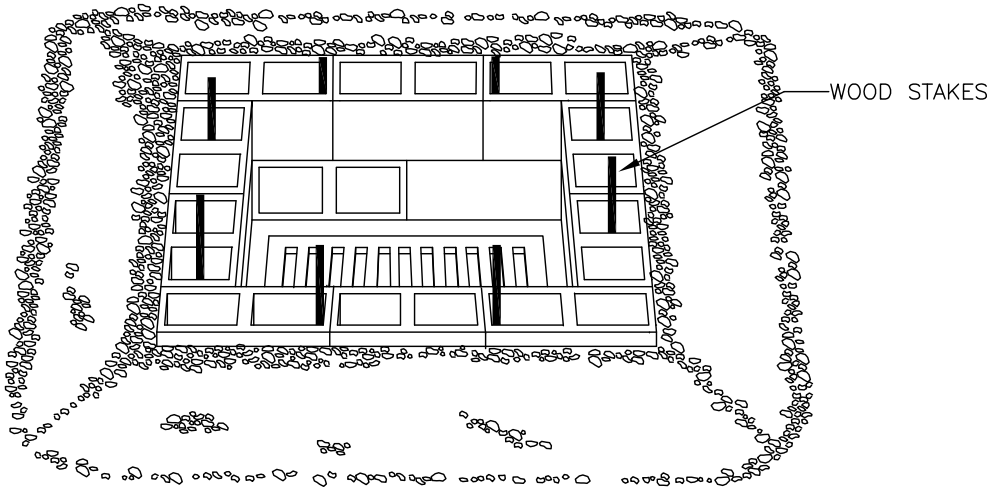

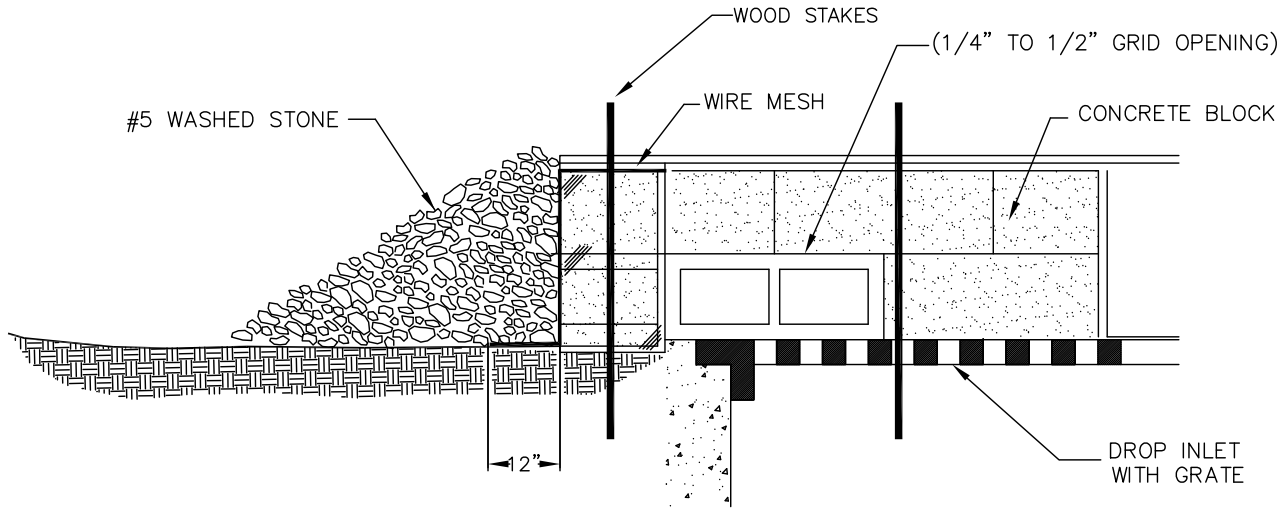

SPECIFIC APPLICATION:

THIS METHOD OF INLET PROTECTION IS APPLICABLE WHERE HEAVY FLOWS ARE EXPECTED AND WHERE OVERFLOW CAPACITY IS NECESSARY TO PREVENT EXCESSIVE PONDING AROUND THE STRUCTURE.

NOT TO SCALE

	TOWN OF WAXHAW LAND DEVELOPMENT STANDARDS	BLOCK AND GRAVEL STONE INLET PROTECTION	STD. NO. 510.1 / REV.

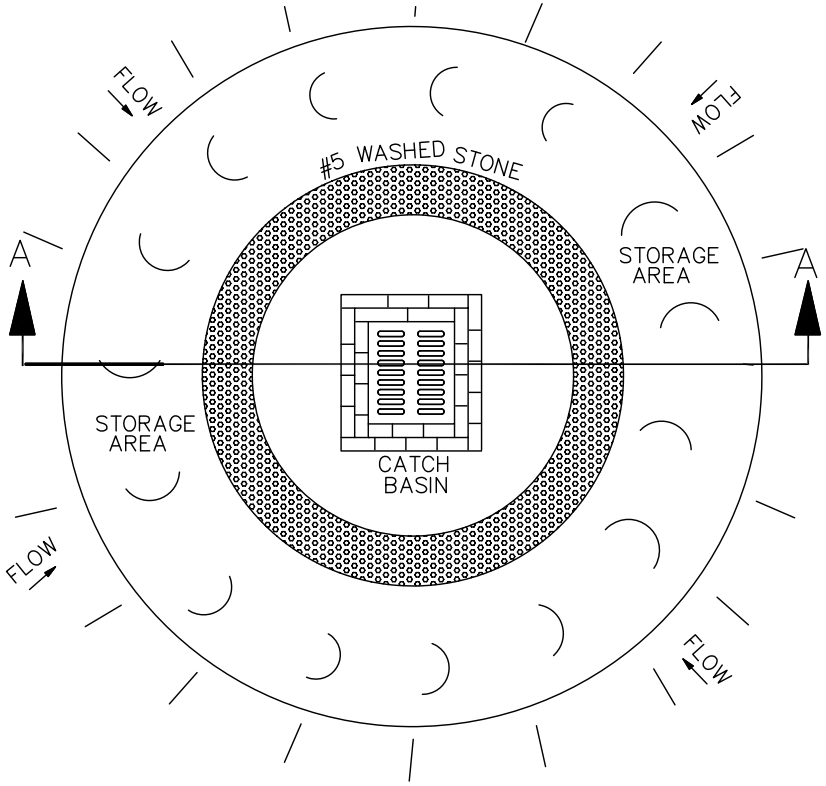

PLAN VIEW

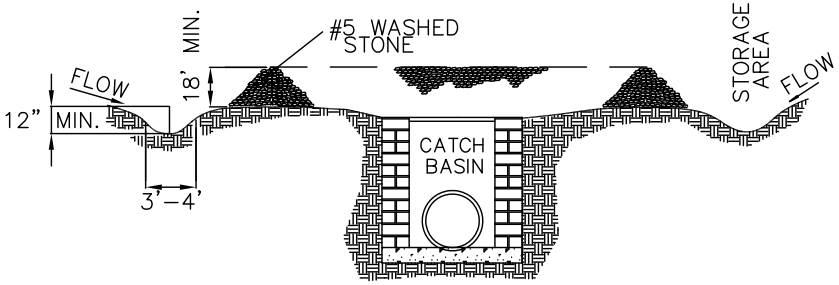

SECTION A–A

GENERAL NOTES:

1. SEDIMENT SHALL BE REMOVED AND TRAP RESTORED TO ITS ORIGINAL DIMENSIONS WHEN THE SEDIMENT HAS ACCUMULATED TO 1/2 THE DESIGN DEPTH OF THE TRAP.
2. REMOVED SEDIMENT SHALL BE DEPOSITED IN A SUITABLE AREA AND IN SUCH A MANNER THAT IT WILL NOT ERODE.
3. THE STRUCTURE SHALL BE INSPECTED BY THE FINANCIALLY RESPONSIBLE PARTY OR HIS AGENT AFTER EACH STORM EVENT AND REPAIRS MADE AS NECESSARY.
4. CONSTRUCTION OPERATIONS SHALL BE CARRIED OUT IN SUCH A MANNER THAT EROSION AND WATER POLLUTION ARE MINIMIZED.
5. THE SEDIMENT TRAP SHALL BE REMOVED AND THE AREA STABILIZED WHEN THE DRAINAGE BASIN HAS BEEN PROPERLY STABILIZED.
6. ON LARGER DRAINAGE AREAS RIP RAP MAY BE REQUIRED UNDER THE WASHED STONE.

NOT TO SCALE

	TOWN OF WAXHAW LAND DEVELOPMENT STANDARDS	STONE INLET PROTECTION	STD. NO. 511.1 / REV.

GENERAL NOTES:

1. UNIFORMLY GRADE A SHALLOW DEPRESSION APPROACHING THE INLET.

2. DRIVE 5–FOOT STEEL POSTS 2 FEET INTO THE GROUND SURROUNDING THE INLET. SPACE POSTS EVENLY AROUND THE PERIMETER OF THE INLET, A MAXIMUM OF 4 FEET APART.

3. SURROUND THE POSTS WITH WIRE MESH HARDWARE CLOTH. SECURE THE WIRE MESH TO THE STEEL POSTS AT THE TOP, MIDDLE, AND BOTTOM. PLACING A 2–FOOT FLAP OF THE WIRE MESH UNDER THE GRAVEL FOR ANCHORING IS RECOMMENDED.

4. PLACE CLEAN GRAVEL (NC DOT #5 OR #57 STONE) ON A 2:1 SLOPE WITH A HEIGHT OF 16 INCHES AROUND THE WIRE, AND SMOOTH TO AN EVEN GRADE.

5. ONCE THE CONTRIBUTING DRAINAGE AREA HAS BEEN STABILIZED, REMOVE ACCUMULATED SEDIMENT, AND ESTABLISH FINAL GRADING ELEVATIONS.

6. COMPACT THE AREA PROPERLY AND STABILIZED IT WITH GROUNDCOVER.

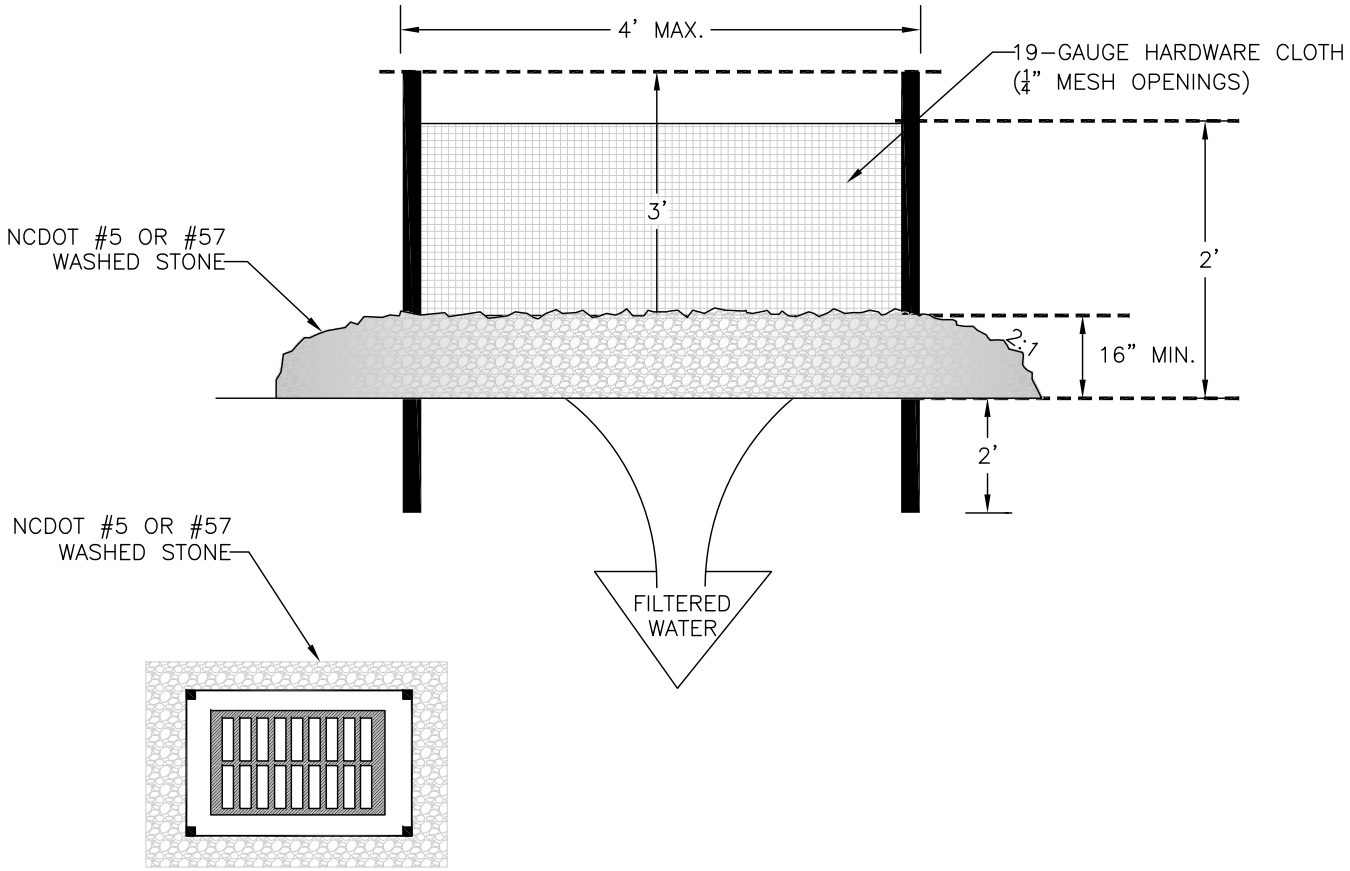

NOT TO SCALE

	TOWN OF WAXHAW LAND DEVELOPMENT STANDARDS	HARDWARE CLOTH AND GRAVEL INLET PROTECTION	STD. NO. 512.1 / REV.

GENERAL NOTES:

1. RIPRAP SIZE TO BE DESIGNED BY ENGINEER.
2. CHECK DAMS MAY BE USED IN SLOPING DITCHES OR CHANNELS TO SLOW VELOCITY OR TO CREATE SEDIMENT TRAPS.
3. ENSURE THAT MAXIMUM SPACING BETWEEN DAMS PLACES THE TOE OF THE UPSTREAM DAM AT THE SAME ELEVATION AS THE DOWNSTREAM DAM (SEE DIAGRAM BELOW).

A AND B ARE AT EQUAL ELEVATIONS

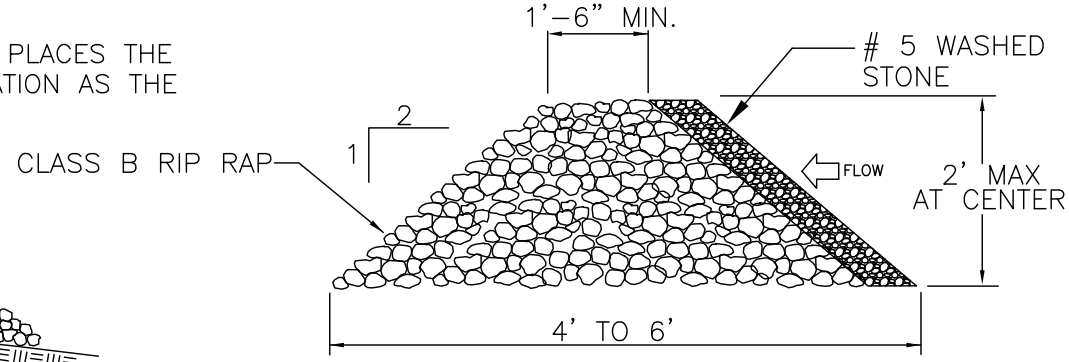

CROSS SECTION

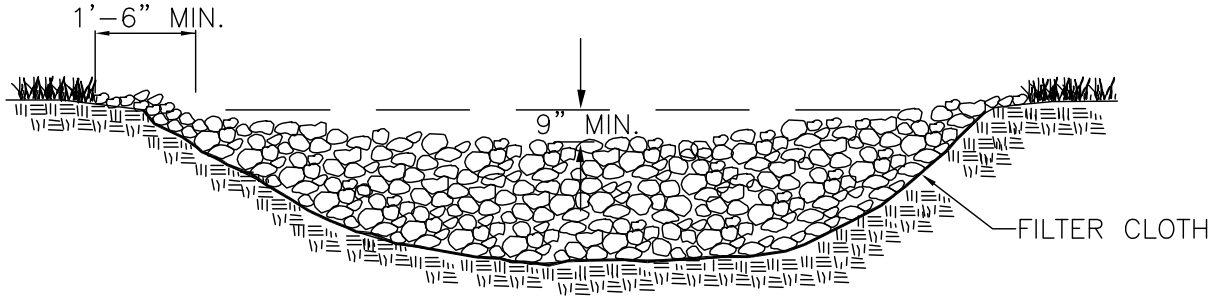

PLAN

NOT TO SCALE

	TOWN OF WAXHAW LAND DEVELOPMENT STANDARDS	TEMPORARY ROCK CHECK DAM	STD. NO. 513.1 / REV.

NOTES:

1. A STABILIZED ENTRANCE PAD OF #5 WASHED STONE AND RAILROAD BALLAST SHALL BE LOCATED WHERE TRAFFIC WILL ENTER OR LEAVE THE CONSTRUCTION SITE ONTO A PUBLIC STREET.
2. FILTER FABRIC OR COMPACTED CRUSHER RUN STONE SHALL BE USED AS A BASE FOR THE CONSTRUCTION ENTRANCE.
3. THE ENTRANCE SHALL BE MAINTAINED IN A CONDITION WHICH WILL PREVENT TRACKING OR FLOWING OF SEDIMENT ONTO PUBLIC STREETS OR EXISTING PAVEMENT. THIS MAY REQUIRE PERIODIC TOP DRESSING WITH ADDITIONAL STONE AS CONDITIONS WARRANT AND REPAIR OR CLEANOUT OF ANY MEASURES USED TO TRAP SEDIMENT.
4. ANY SEDIMENT SPILLED, DROPPED, WASHED, OR TRACKED ONTO PUBLIC STREETS MUST BE REMOVED IMMEDIATELY. ANY AGGREGATE TRACKED INTO THE ROADWAY MUST BE SWEPT BACK ONSITE ON A NIGHTLY BASIS.
5. WHEN APPROPRIATE, WHEELS MUST BE CLEANED TO REMOVE SEDIMENT PRIOR TO ENTERING A PUBLIC STREET. WHEN WASHING IS REQUIRED, IT SHALL BE DONE IN AN AREA STABILIZED WITH CRUSHED STONE WHICH DRAINS INTO AN APPROVED SEDIMENT BASIN SEE STD. NO. 515.1
6. THE TOWN MAY REQUIRE A STANDARD COMMERCIAL DRIVEWAY (STD. 108.1 & 109.1) TO ACCESS THE CONSTRUCTION SITE IF THE DRIVEWAY IS ON A THOROUGHFARE.

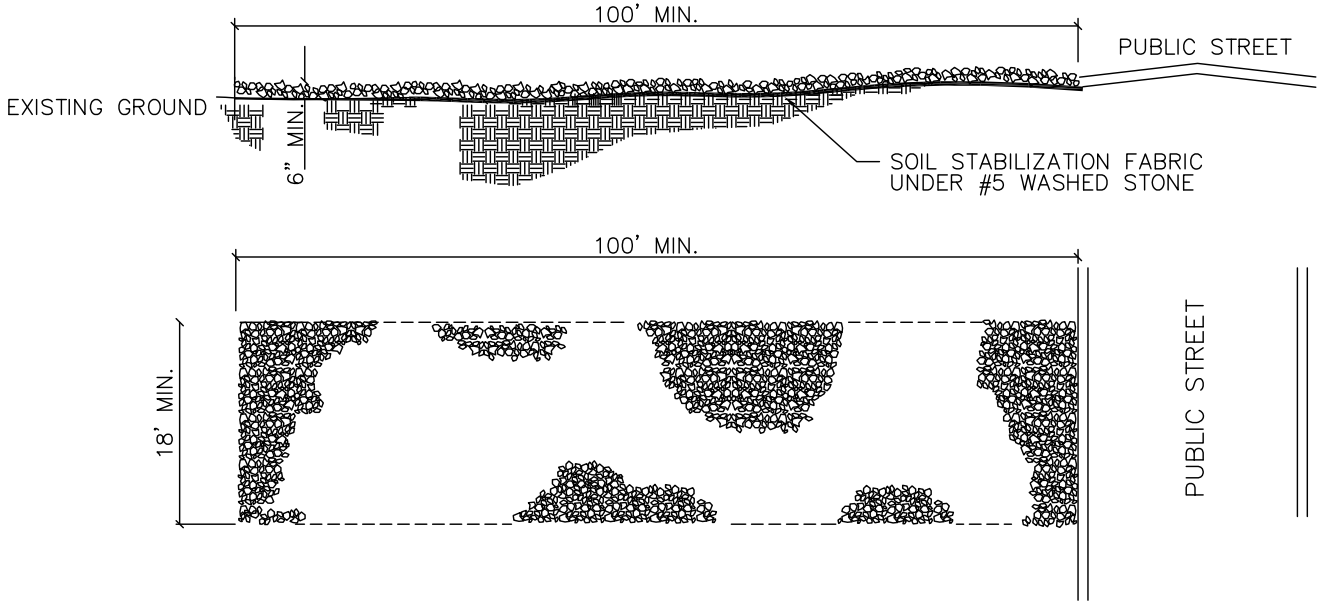

NOT TO SCALE

TOWN OF WAXHAW LAND DEVELOPMENT STANDARDS	STABILIZED CONSTRUCTION ENTRANCE	STD. NO. 514.1 / REV.

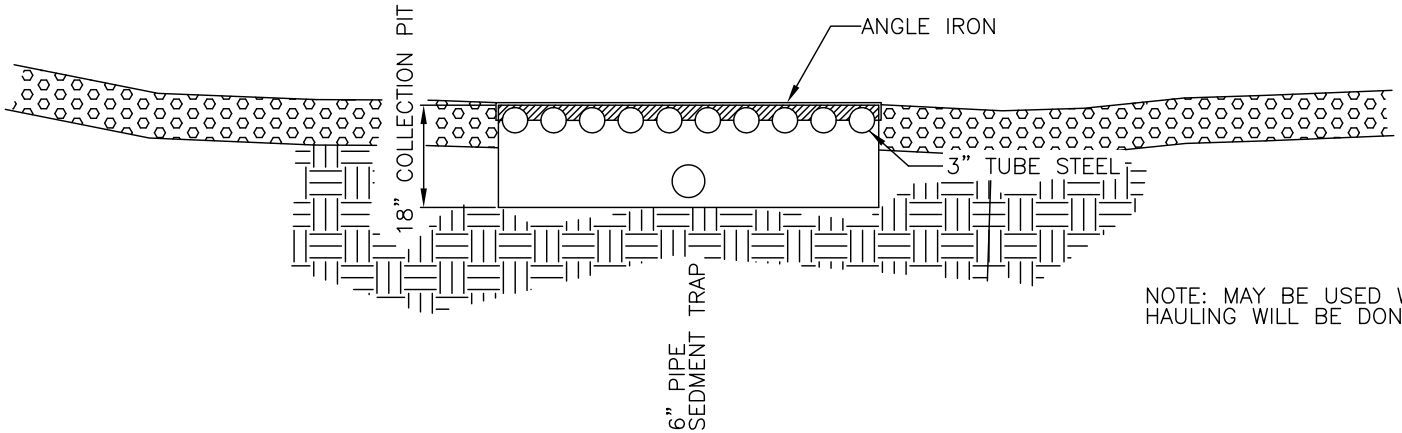

NOTE: MAY BE USED WHERE EXTENSIVE HAULING WILL BE DONE.

SECTION A – A

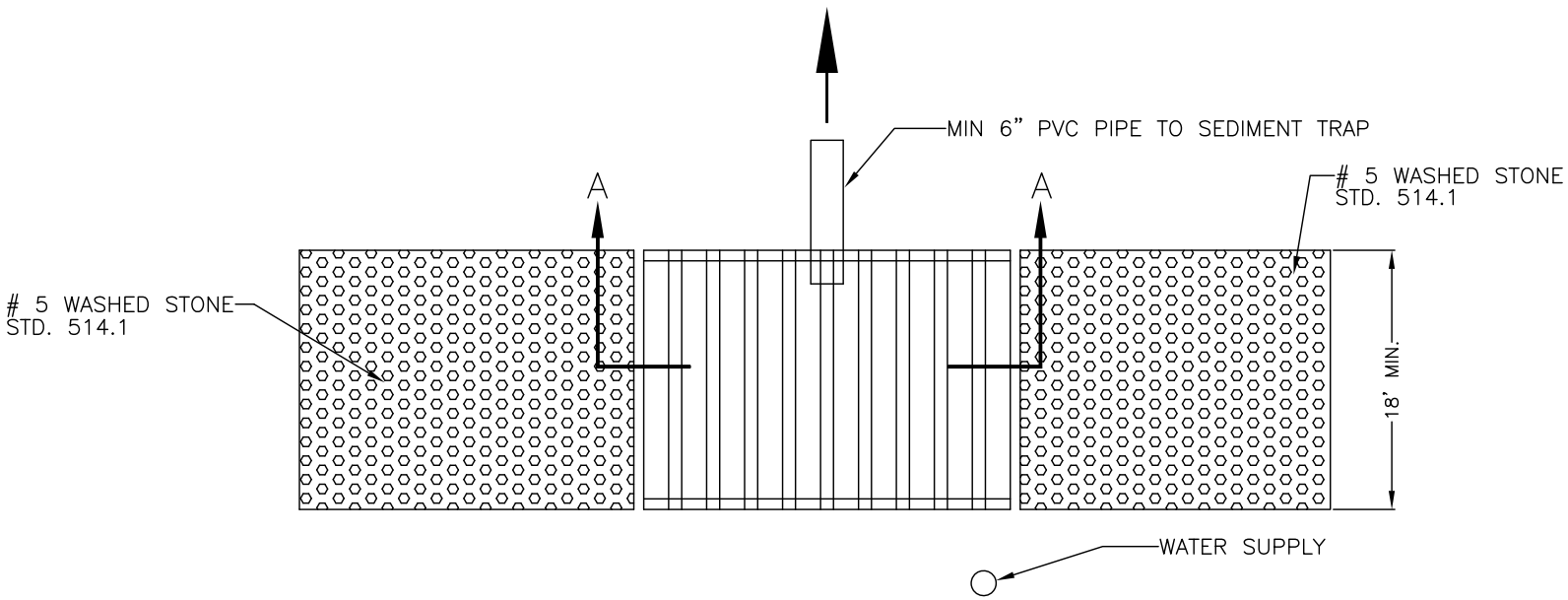

NOT TO SCALE

TOWN OF WAXHAW LAND DEVELOPMENT STANDARDS	CONSTRUCTION ENTRANCE TIRE WASH	STD. NO. 515.1	REV. 8/19

DATA BLOCK

BASIN NO.	DRAINAGE AREA (ACRES)	DENUDED AREA (ACRES)	BASIN VOLUME		BASIN SURFACE AREA		CLEANOUT DEPTH (FT.) H/2	H (FEET)
			REQUIRED (CUBIC FT.)	PROVIDED (CUBIC FT.)	REQUIRED (SQ FT.)	PROVIDED (SQ FT.)		

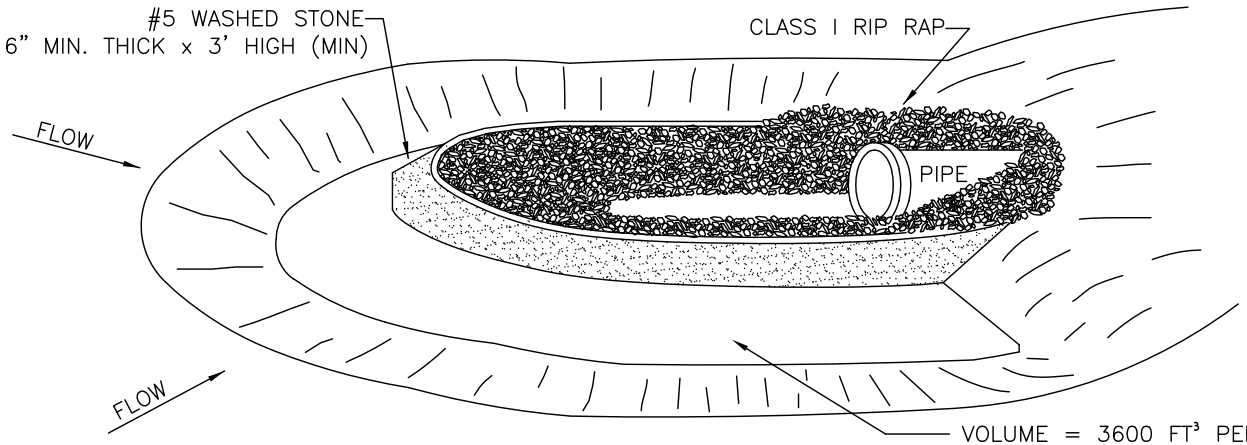

PERSPECTIVE VIEW

VOLUME = 3600 FT³ PER ACRE DISTURBED TO TOP OF BERM ELEVATION.
SURFACE AREA REQ'D = 435 SQ. FT. PER CFS Q10

GENERAL NOTES:

1. GRAVEL AND RIP RAP FILTER BERM BASIN SHOULD BE USED TO PROTECT EXISTING PIPE INVERTS THAT DRAIN 5 ACRES OR LESS.
2. DIMENSIONS SHOWN ARE THE MINIMUM ACCEPTED UNLESS OTHERWISE NOTED.
3. CLEANOUT PRIOR TO SEDIMENT REACHING HALF OF BERM HEIGHT.

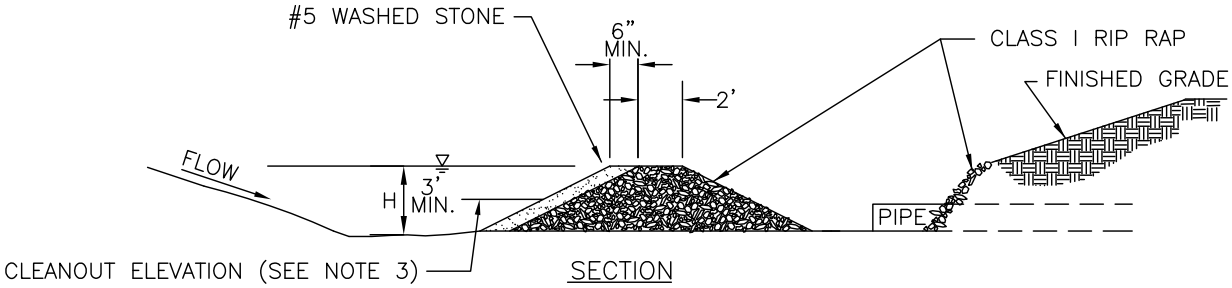

SECTION

NOT TO SCALE

	TOWN OF WAXHAW LAND DEVELOPMENT STANDARDS	GRAVEL AND RIP RAP FILTER BERM BASIN	STD. NO. 516.1 / REV.

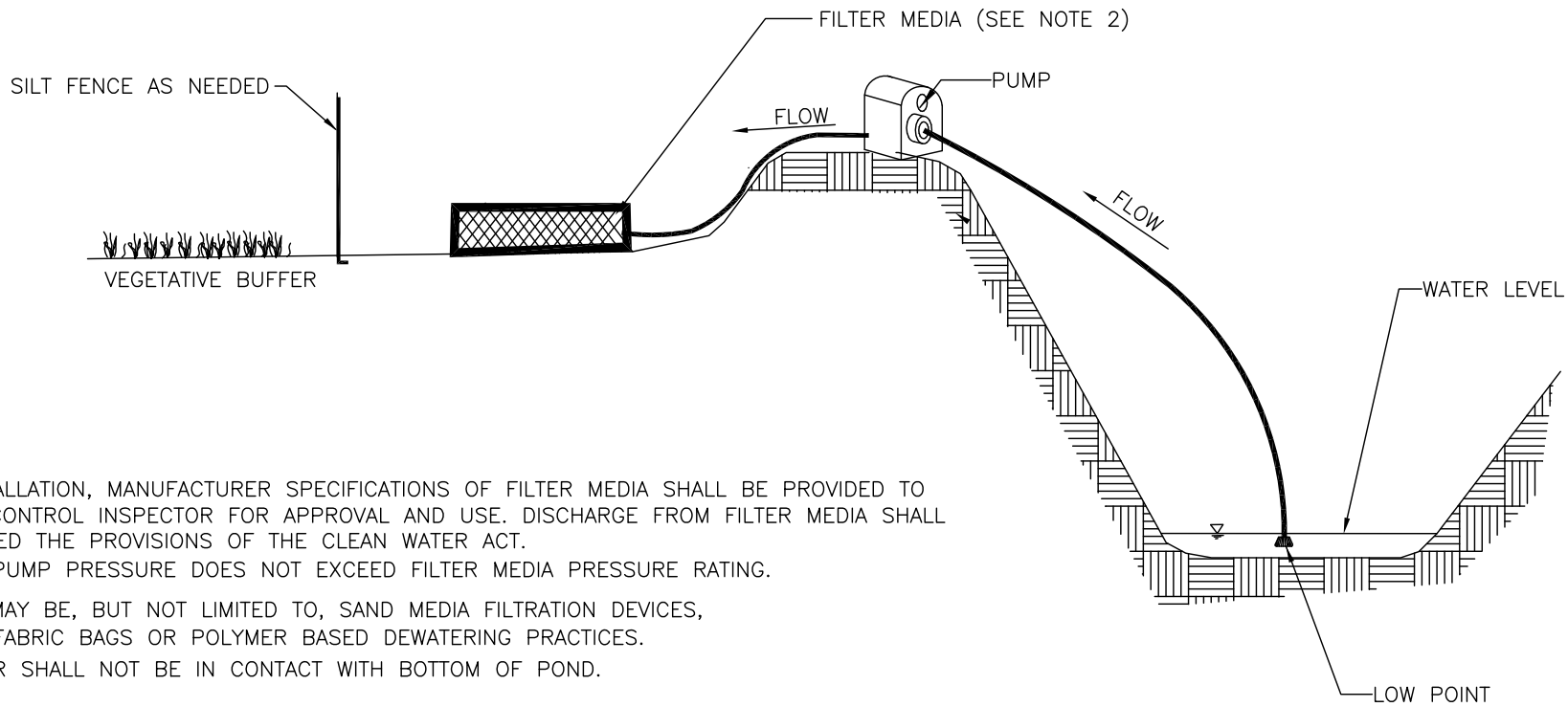

NOTE:

1. PRIOR TO INSTALLATION, MANUFACTURER SPECIFICATIONS OF FILTER MEDIA SHALL BE PROVIDED TO THE EROSION CONTROL INSPECTOR FOR APPROVAL AND USE. DISCHARGE FROM FILTER MEDIA SHALL MEET OR EXCEED THE PROVISIONS OF THE CLEAN WATER ACT.
2. ENSURE THAT PUMP PRESSURE DOES NOT EXCEED FILTER MEDIA PRESSURE RATING.
3. FILTER MEDIA MAY BE, BUT NOT LIMITED TO, SAND MEDIA FILTRATION DEVICES, RATED FILTER FABRIC BAGS OR POLYMER BASED DEWATERING PRACTICES.
4. PUMP STRAINER SHALL NOT BE IN CONTACT WITH BOTTOM OF POND.

NOT TO SCALE

	TOWN OF WAXHAW LAND DEVELOPMENT STANDARDS	EROSION CONTROL DEWATERING	STD. NO. 517.1 / REV.

NOTES

1. REMOVE THE STRUCTURE WHEN NO LONGER NEEDED. (NOT TO EXCEED 1 YEAR).
2. AS A MINIMUM, DESIGN THE STRUCTURE TO PASS 2 YEAR PEAK FLOW WITHOUT OVERTOPPING.
3. ENSURE THAT DESIGN FLOW VELOCITY AT THE OUTLET OF THE CROSSING STRUCTURE IS NON-EROSIVE FOR THE RECEIVING STREAM CHANNEL.

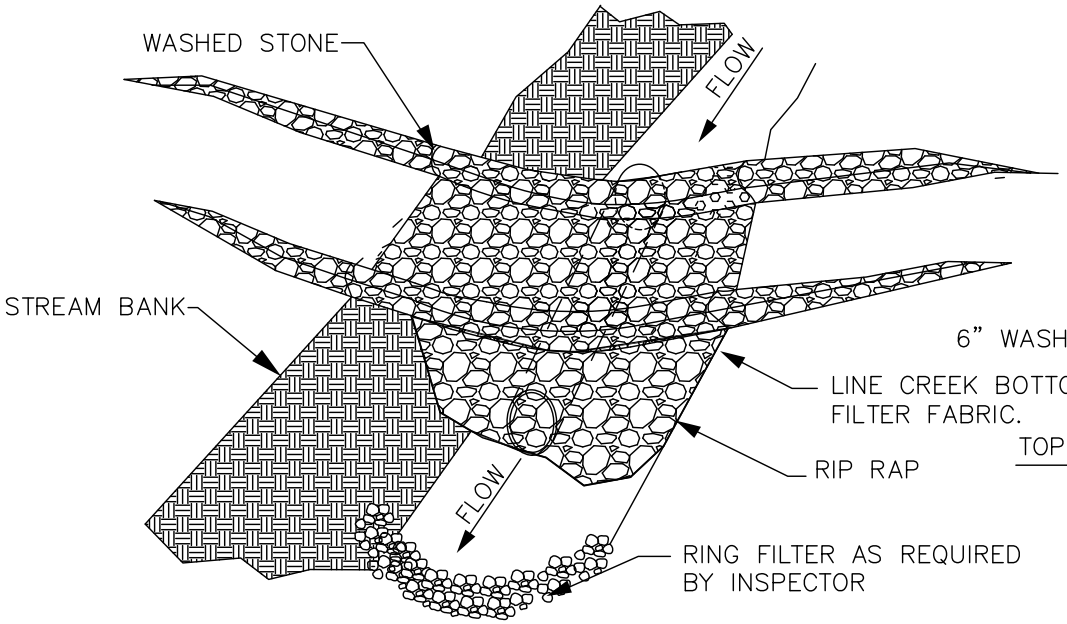

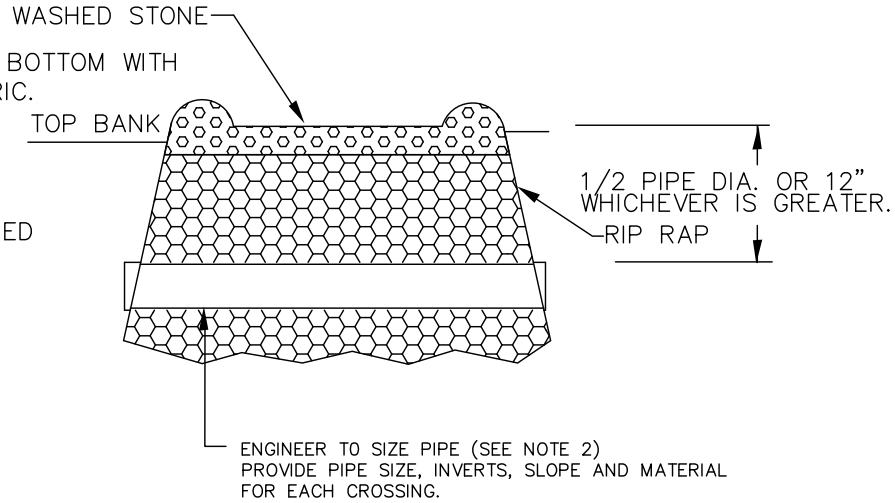

NOTES:

1. ADDITIONAL MEASURES MAY BE REQURIED PER THE TOWN ENGINEER BASED ON SPECIFIC SITE CONDITIONS.

NOT TO SCALE

	TOWN OF WAXHAW LAND DEVELOPMENT STANDARDS	TEMPORARY STREAM CROSSING	STD. NO. 518.1 / REV.

NOTES:

1. INLET MAINTENANCE SHALL BE DOCUMENTED IN PROJECT LOG BOOK.
2. FILTER TYPES SHALL BE APPROVED BY THE TOWN INSPECTOR PRIOR TO INSTALLATION.
3. FILTER BAGS MAY BE REMOVED WHEN SITE IS STABILIZED AT THE DIRECTION OF THE ENGINEER.
4. FILTER BAGS SHALL BE REMOVED PRIOR TO STREET ACCEPTANCE AND/OR CLOSE OUT OF GRADING PERMIT.
5. FILTER BAGS SHALL BE CLEANED OR REPLACED ON A REGULAR BASIS (NOT BE MORE THAN HALF FULL AT ANY TIME).
6. FILTER BAGS MAY BE INSTALLED IN EXISTING TOWN OR NCDOT ROADS AS LONG AS STORM DRAINAGE IS NOT IMPEDED.

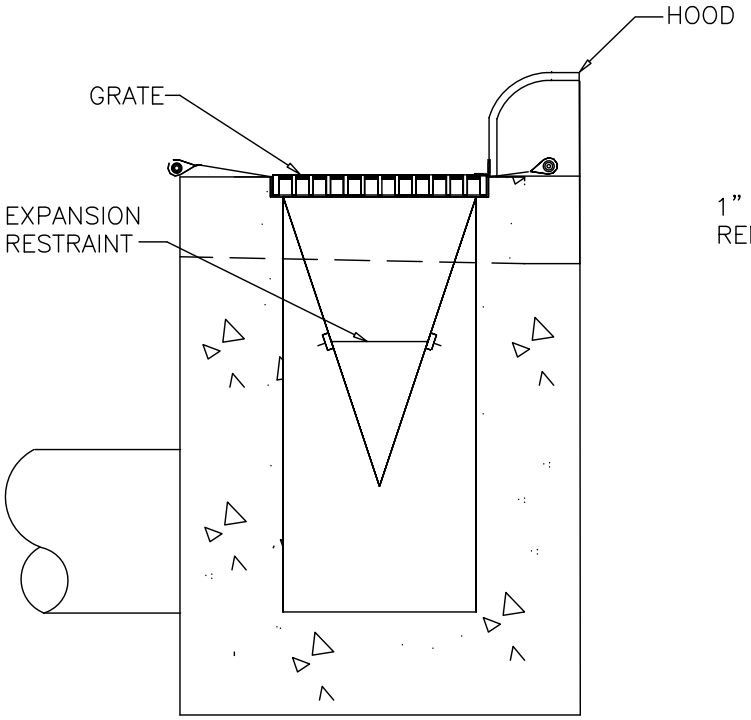

SECTION

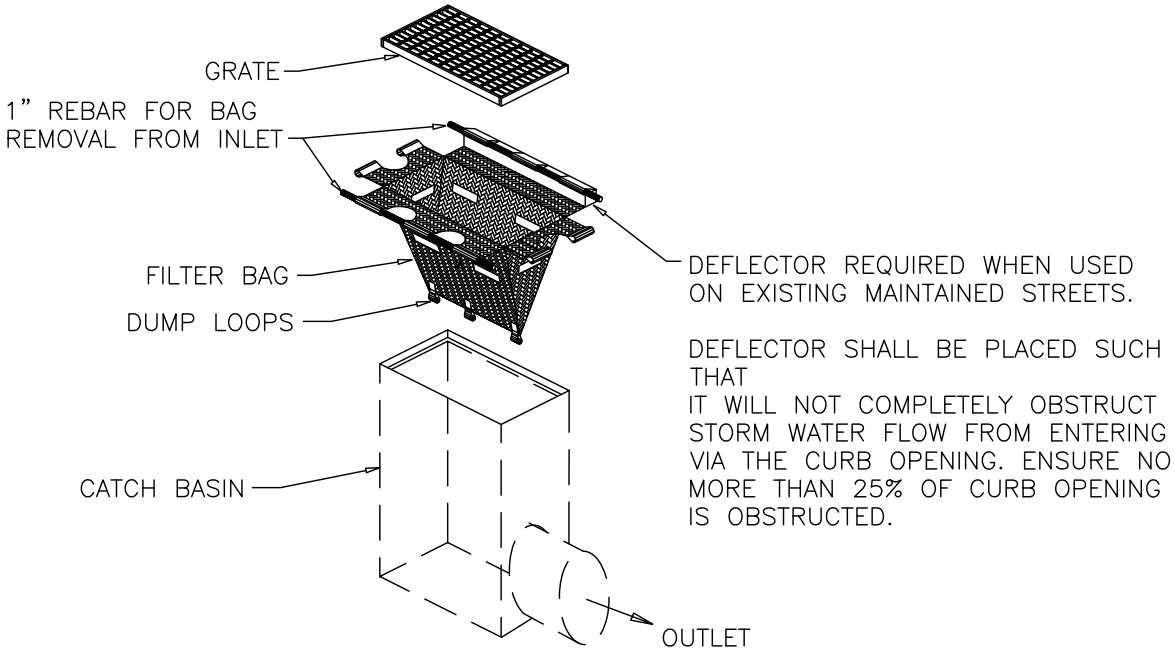

INSTALLATION

NOT TO SCALE

	TOWN OF WAXHAW LAND DEVELOPMENT STANDARDS	CATCH BASIN INLET PROTECTION

STD. NO.	REV.
519.1	

ALTERNATIVE 1:

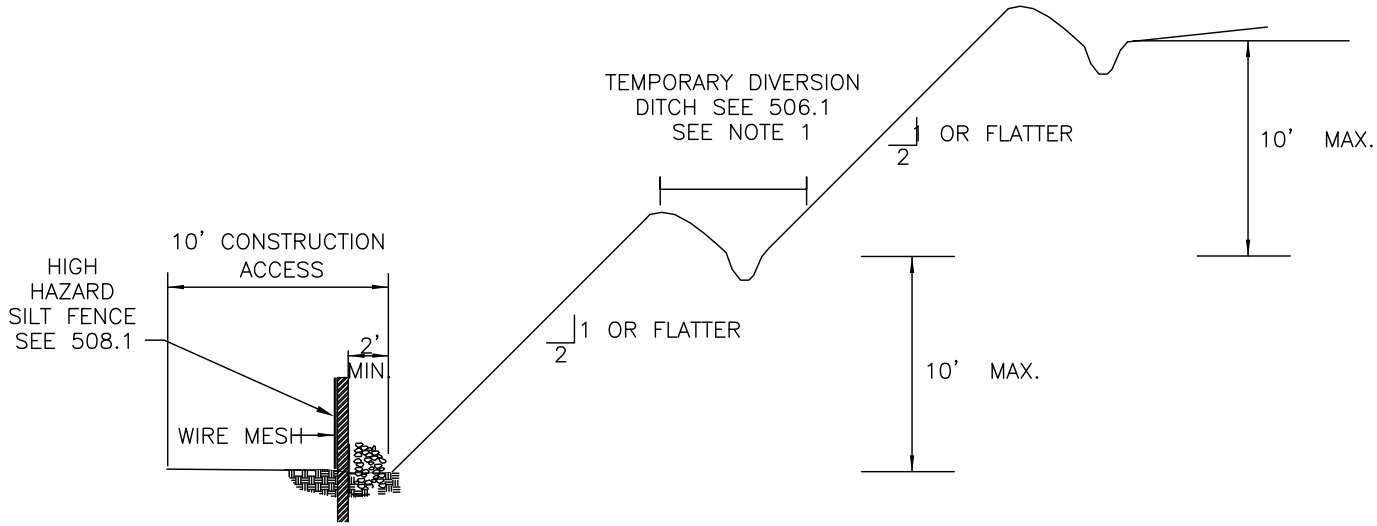

ALTERNATIVE 2:

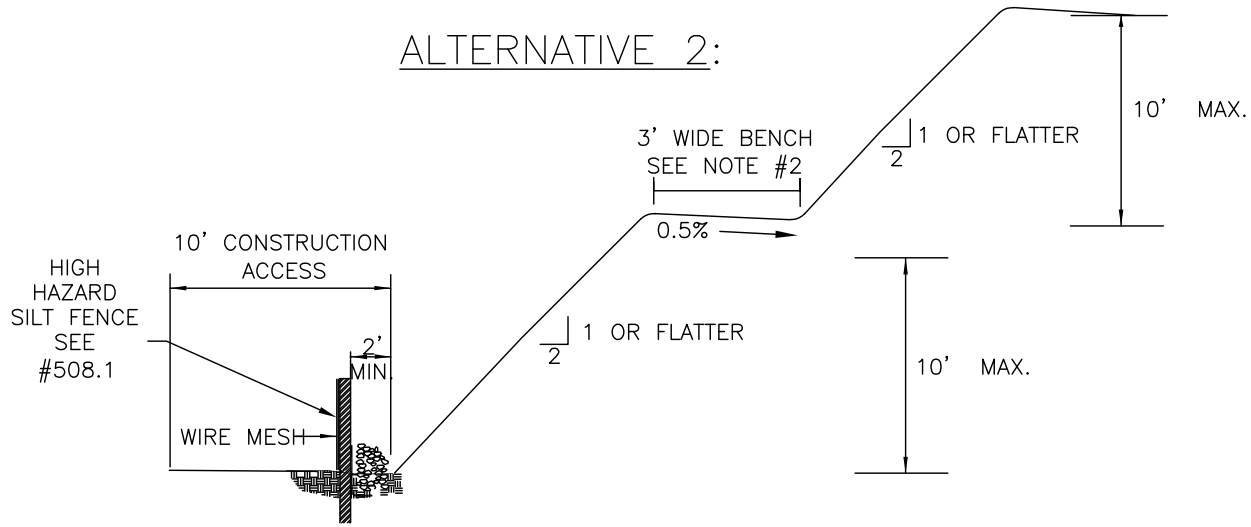

NOTES:

1. IF DIVERSION DITCH USED, IT SHOULD FLOW INTO SEDIMENT BASIN ROCK CHECK DAM, OR SLOPE DRAIN
2. BENCH SHOULD BE GRADED AT 0% LONGITUDINAL SLOPE (ON-CONTOUR)

NOT TO SCALE

	TOWN OF WAXHAW LAND DEVELOPMENT STANDARDS	SLOPE STABILITY BENCH	STD. NO. 520.1 / REV.

FOR LATE WINTER AND EARLY SPRING:

SEEDING MIXTURE:
RYE (GRAIN) – 120 LB/ACRE
ANNUAL LESPEDEZA (KOBE) – 50 LB/ACRE
(OMIT ANNUAL LESPEDEZA WHEN DURATION OF TEMPORARY COVER IS NOT TO EXTEND BEYOND JUNE)

SEEDING DATES:
JAN. 1 – MAY 1

SOIL AMENDMENTS:
FOLLOW RECOMMENDATIONS OF SOIL TESTS OR APPLY 2,000 LB/ACRE GROUND AGRICULTURAL LIMESTONE AND 750 LB/ACRE 10–10–10 FERTILIZER

MULCH:
APPLY 4,000 LB/ACRE STRAW. ANCHOR STRAW BY TACKING WITH ASPHALT, NETTING, OR A MULCH ANCHORING TOOL. A DISK WITH BLADES SET NEARLY STRAIGHT CAN BE USED AS A MULCH ANCHORING TOOL

MAINTENANCE:
REFERTILIZE IF GROWTH IS NOT FULLY ADEQUATE. RESEED, FERTILIZE AND MULCH IMMEDIATELY FOLLOWING EROSION OR OTHER DAMAGE

FOR SUMMER:

SEEDING MIXTURE:
GERMAN MILLET – 40 LB/ACRE
(A SMALL–STEMMED SUDANGRASS MAY BE SUBSTITUTED AT A RATE OF 50 LB/ACRE)

SEEDING DATES:
MAY 1 – AUG. 15

SOIL AMENDMENTS:
FOLLOW RECOMMENDATIONS OF SOIL TESTS OR APPLY 2,000 LB/ACRE GROUND AGRICULTURAL LIMESTONE AND 750 LB/ACRE 10–10–10 FERTILIZER

MULCH:
APPLY 4,000 LB/ACRE STRAW. ANCHOR STRAW BY TACKING WITH ASPHALT, NETTING, OR A MULCH ANCHORING TOOL. A DISK WITH BLADES SET NEARLY STRAIGHT CAN BE USED AS A MULCH ANCHORING TOOL

MAINTENANCE:
REFERTILIZE IF GROWTH IS NOT FULLY ADEQUATE. RESEED, FERTILIZE AND MULCH IMMEDIATELY FOLLOWING EROSION OR OTHER DAMAGE

FOR FALL:

SEEDING MIXTURE:
RYE (GRAIN) – 120 LB/ACRE

SEEDING DATES:
AUG. 15 – DEC 30

SOIL AMENDMENTS:
FOLLOW RECOMMENDATIONS OF SOIL TESTS OR APPLY 2,000 LB/ACRE GROUND AGRICULTURAL LIMESTONE AND 1,000 LB/ACRE 10–10–10 FERTILIZER

MULCH:
APPLY 4,000 LB/ACRE STRAW. ANCHOR STRAW BY TACKING WITH ASPHALT, NETTING, OR A MULCH ANCHORING TOOL. A DISK WITH BLADES SET NEARLY STRAIGHT CAN BE USED AS A MULCH ANCHORING TOOL

MAINTENANCE:
REPAIR AND REFERTILIZE DAMAGED AREAS IMMEDIATELY. TOPDRESS WITH 50 LB/ACRE OF NITROGEN IN MARCH. IF IT IS NECESSARY TO EXTEND TEMPORARY COVER BEYOND JUNE 15, OVERSEED WITH 50 LB/ACRE KOBE LESPEDEZA IN LATE FEBRUARY OR EARLY MARCH.

FOR ADDITIONAL INFORMATION, REFER TO NCDEQ EROSION AND SEDIMENT CONTROL PLANNING AND DESIGN MANUAL (ESCPDM), SECTION 6.10.
FOR PERMANENT SEEDING SPECIFICATIONS, INCLUDING SEED BED PREP, SEASONAL LIMITATIONS FOR SEEDING OPERATIONS, THE KINDS OF GRADES OF FERTILIZERS, THE KINDS OF SEED, AND THE RATES OF APPLICATION OF LIMESTONE, FERTILIZER, AND SEED, REFER TO NCDEQ ESCPDM SECTION 6.11.

NOTES:

1. WORK IN CREEK SHALL BE PLANNED TO MINIMIZE THE NUMBER OF DAYS OF DISTURBANCE.
2. THE CONTRACTOR IS TO OBSERVE THE LOCAL WEATHER FORECASTS AND NOT BEGIN WORK IN THE CREEK UNLESS AT LEAST THREE DAYS WITHOUT RAIN IS ANTICIPATED.
3. ALL DISTURBED CREEK BED AND BANKS ARE TO BE STABILIZED PRIOR TO THE END OF EACH WORK DAY.
4. FOR LARGER CREEKS, CONSTRUCTION SHOULD OCCUR ON ONE SIDE OF THE CREEK AT A TIME. THE FIRST SIDE SHOULD BE STABILIZED BEFORE BEGINNING CONSTRUCTION ON THE OPPOSITE SIDE.
5. A TEMPORARY PIPE OR PUMP MAY BE INSTALLED TO CONTROL CREEK FLOW DURING CUNSTRUCTION.

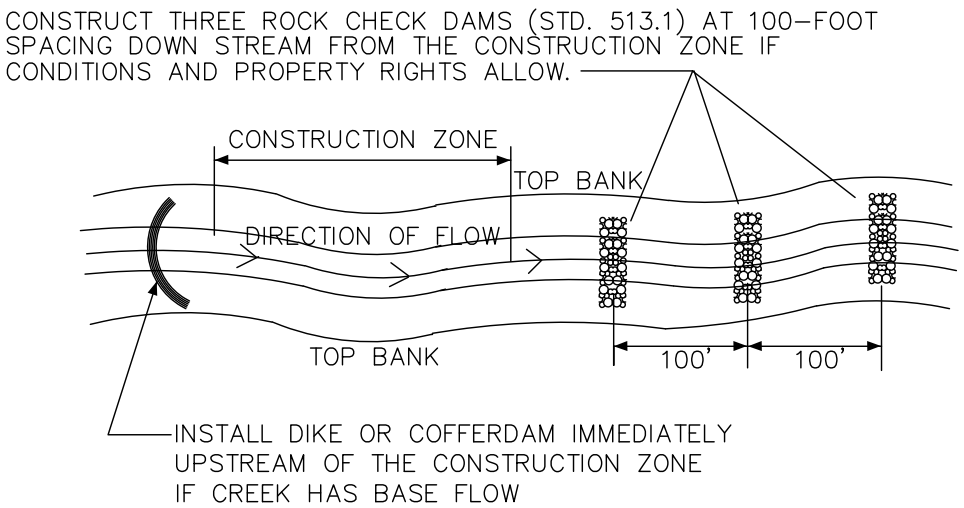

NOT TO SCALE

TOWN OF WAXHAW LAND DEVELOPMENT STANDARDS	CONSTRUCTION WITHIN CREEK BANK (FOR USE WITH ROAD CROSSINGS, UTILITY CROSSINGS & CULVERT CONSTRUCTION)	STD. NO. 523.1 REV.

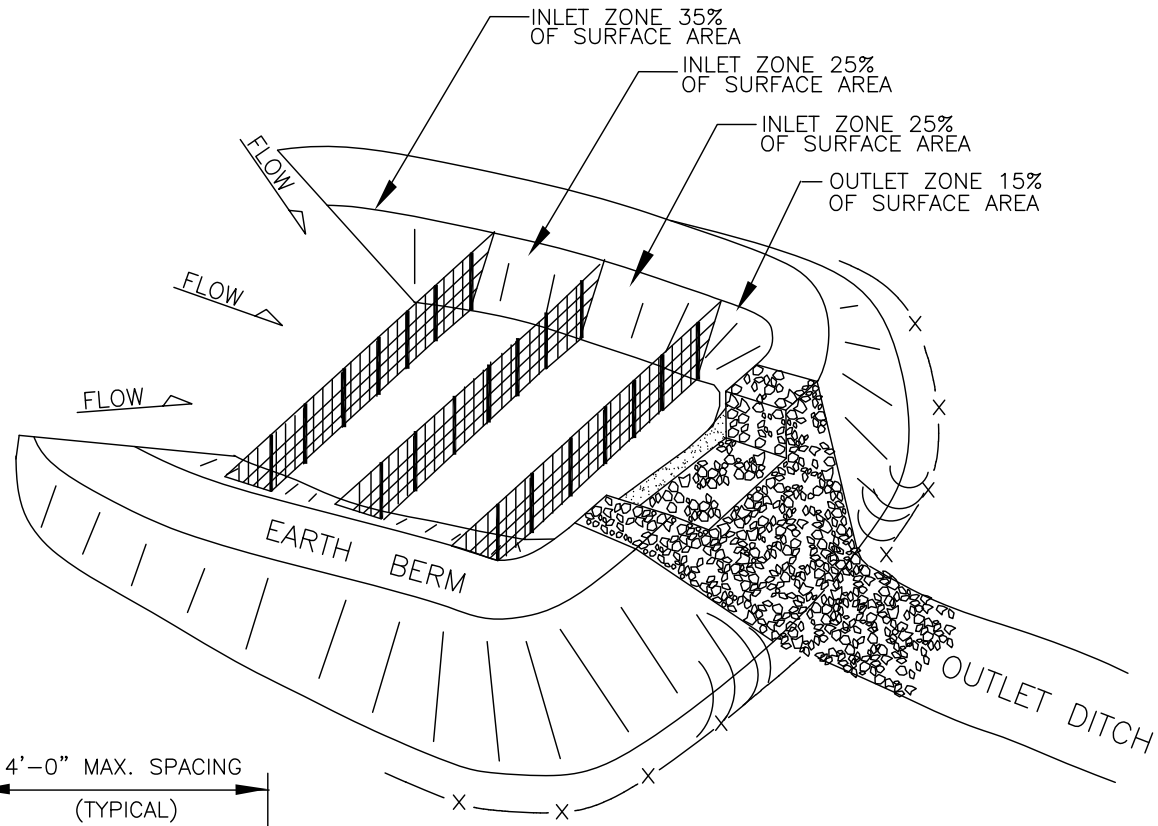

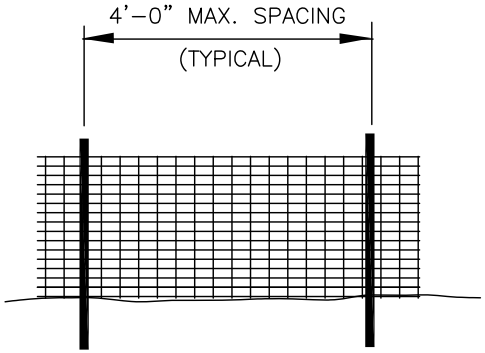

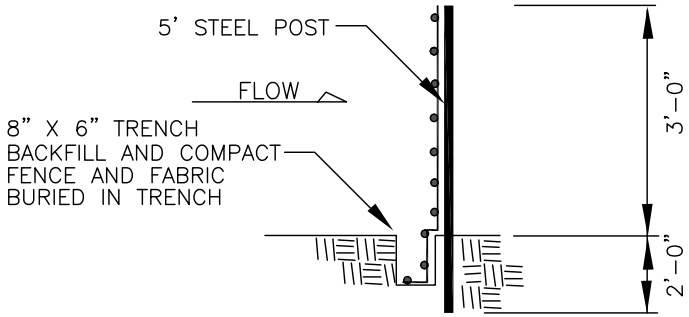

GENERAL NOTES:

1. DRIVE 5' STEEL POST AT LEAST 24" INTO SOLID GROUND.
2. USE STAPLES 1' APART HORIZONTALLY AND VERTICALLY TO ATTACH THE FILTER FABRIC TO THE WIRE FENCE.
3. MINIMUM BAFFLE SPACING IS 10'.
4. THE FLOOR OF THE BASIN IN THE OUTLET ZONE AND BERMS SHOULD BE SEEDED IMMEDIATELY AFTER THE BASIN IS CONSTRUCTED.
5. REFER TO NCESCPDM SECTION #6.65 FOR ADDITIONAL SPECIFIATIONS.

NOT TO SCALE

TOWN OF WAXHAW LAND DEVELOPMENT STANDARDS	BAFFLE INSTALLATION	STD. NO. 524.1 / REV.

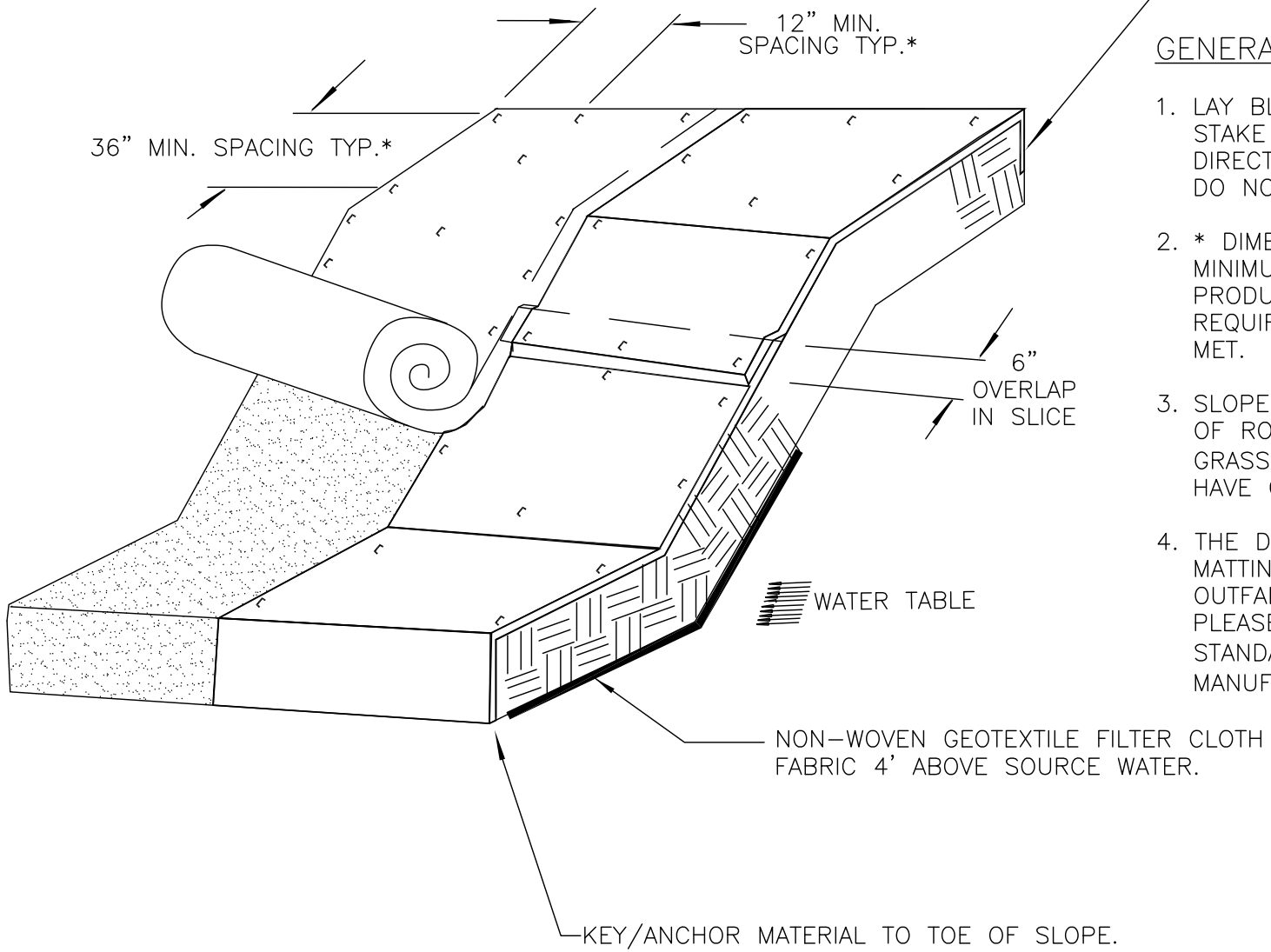

GENERAL NOTES:

1. LAY BLANKETS LOOSELY AND STAKE OR STAPLE TO MAINTAIN DIRECT CONTACT WITH THE SOIL. DO NOT STRETCH.
2. * DIMENSIONS SHOWN ARE MINIMUM, MANUFACTURED PRODUCTS MAY HAVE ADDITIONAL REQUIREMENTS THAT MUST BE MET.
3. SLOPE SURFACE SHALL BE FREE OF ROCKS, SOIL CLODS, STICKS, GRASS. MAT/BLANKETS SHALL HAVE GOOD SOIL CONTACT.
4. THE DETAIL SHOWN IS FOR SLOPE MATTING. FOR CHANNEL OR PIPE OUTFALL MATTING SPECIFICATIONS, PLEASE REFER TO NCESCPDM STANDARD #6.17 AND MANUFACTURER'S GUIDELINES.

NOT TO SCALE

	TOWN OF WAXHAW LAND DEVELOPMENT STANDARDS	EMBANKMENT MATTING DETAIL	STD. NO. 525.1 / REV.

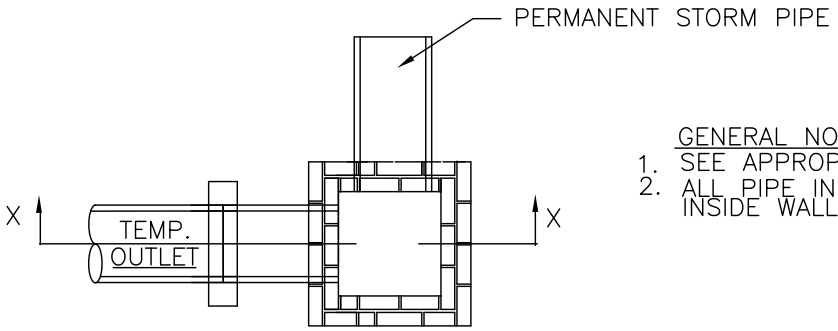

PLAN

GENERAL NOTES:

1. SEE APPROPRIATE STANDARD FOR CATCH BASIN, MANHOLE, JUNCTION BOX USED.
2. ALL PIPE IN STORM DRAIN STRUCTURES SHALL BE STRUCK EVEN WITH THE INSIDE WALL, GROUTED AND BRUSHED SMOOTH.

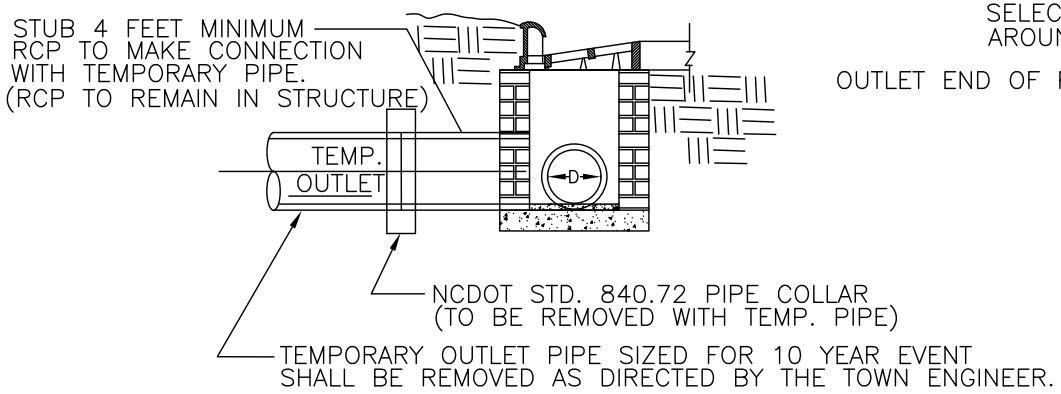

SECTION X–X
ACTIVE SYSTEM

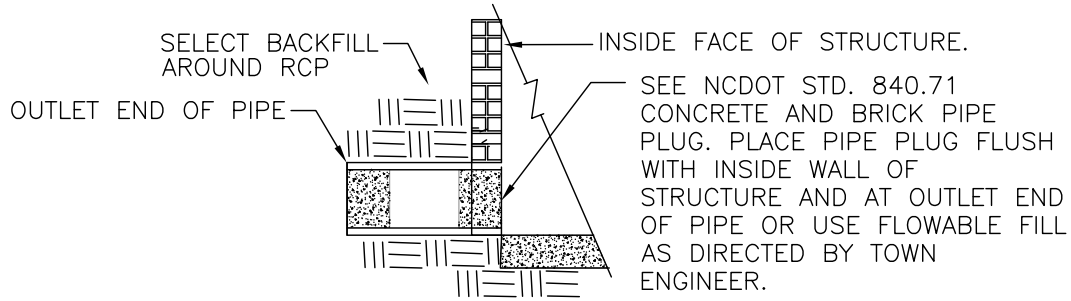

PIPE PLUG DETAIL
AFTER REMOVAL OF TEMPORARY PIPE

NOT TO SCALE

	TOWN OF WAXHAW LAND DEVELOPMENT STANDARDS	BRICK STORM STRUCTURE WITH TEMPORARY PIPE	STD. NO. 526.1 / REV.

NOTES:

1. REMOVE WIRE AND NYLON TWINE FROM BALL AND CANOPY.
2. SOAK ROOT BALL AND PLANT PIT IMMEDIATELY AFTER INSTALLATION.
3. STAKING IS REQUIRED FOR ALL TREES IN R.O.W.. STAKES AND STRAPPING ARE TO BE REMOVED ONE YEAR AFTER PLANTING
4. REMOVE EXCESS SOIL FROM SITE AND DISPOSE OF IN A LEGAL MANNER.
5. RESEED UNMULCHED, DISTURBED AREAS.
6. MULTI–STEM TREES ARE NOT ALLOWED FOR STREET TREES AND ARE DISCOURAGE FOR ANY APPLICATION.

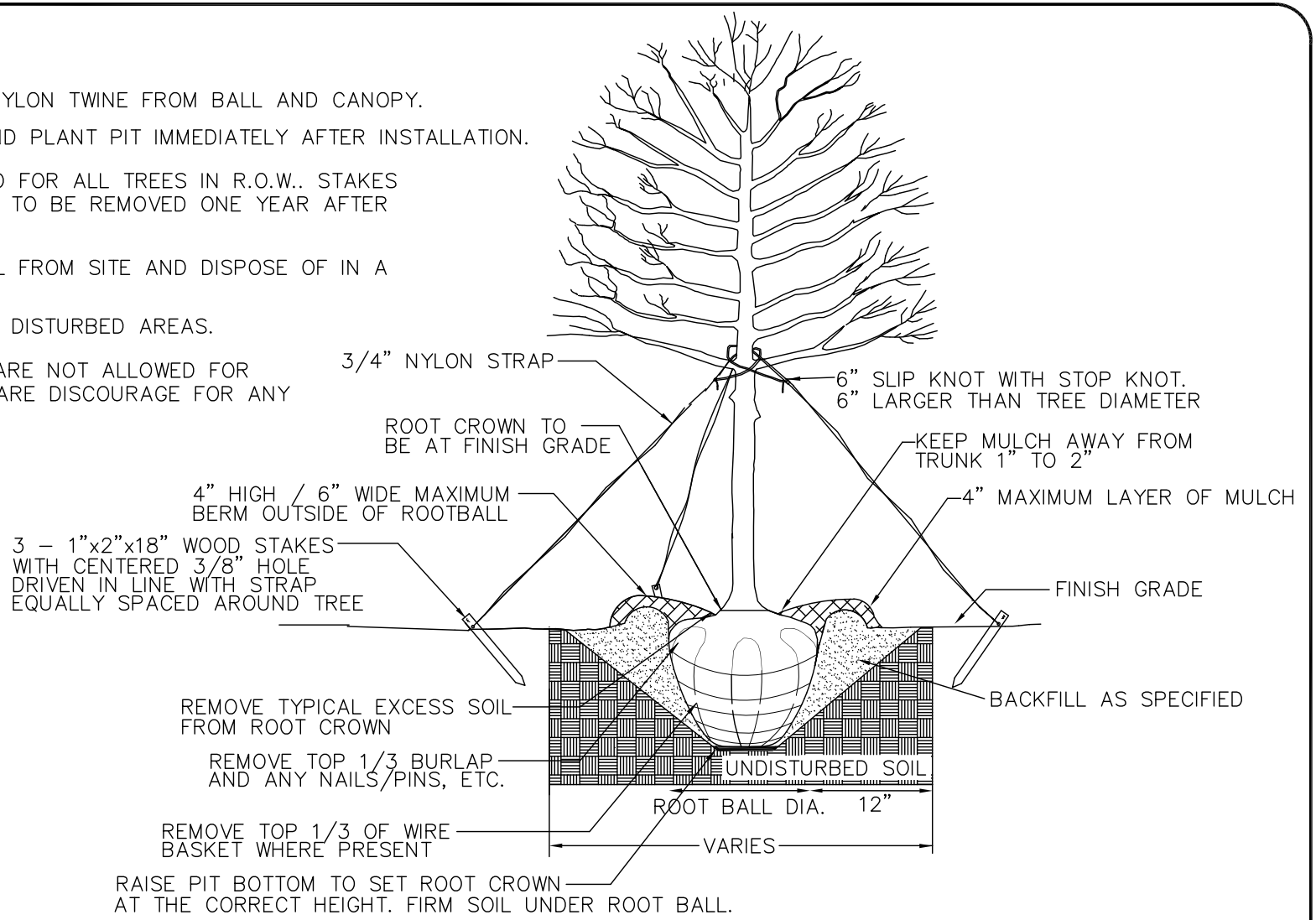

ALL TREES SHALL MEET AMERICAN STANDARD FOR NURSERY STOCK (ANSI Z60.1–2004)

FOR EXAMPLE:

CALIPER	HEIGHT (RANGE)	MAX. HEIGHT	MIN. ROOT BALL DIA.	MIN. ROOT BALL DEPTH
2"	12–14'	16'	24"	16"
3"	14–16'	18'	32"	21"

NOT TO SCALE

TOWN OF WAXHAW
LAND DEVELOPMENT STANDARDS

TREE PLANTING

(FOR SINGLE AND MULTI–STEM TREES)

STD. NO. 600.1 REV.

NOTES:

1. REMOVE ALL BARRIERS UPON COMPLETION OF PROJECT.
2. LANDSCAPING PLANS SHALL SHOW THE LOCATIONS OF ALL TREE PROTECTION FENCES.
3. PROTECTION RADIUS SHALL BE THE GREATER OF; 6 FEET, THE THE OUTER LIMITS OF THE DRIPLINE OR 1.5 FEET FOR EACH INCH OF TREE DIAMETER AT 4.5 FEET ABOVE GROUND.

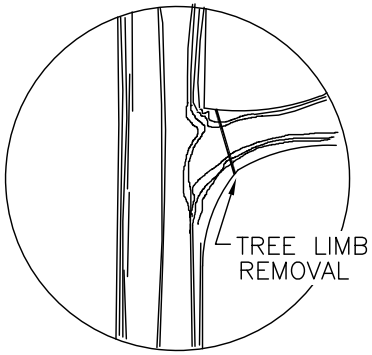

FOR PRUNING SEE INTERNATIONAL SOCIETY OF ARBORICULTURE SPECS.

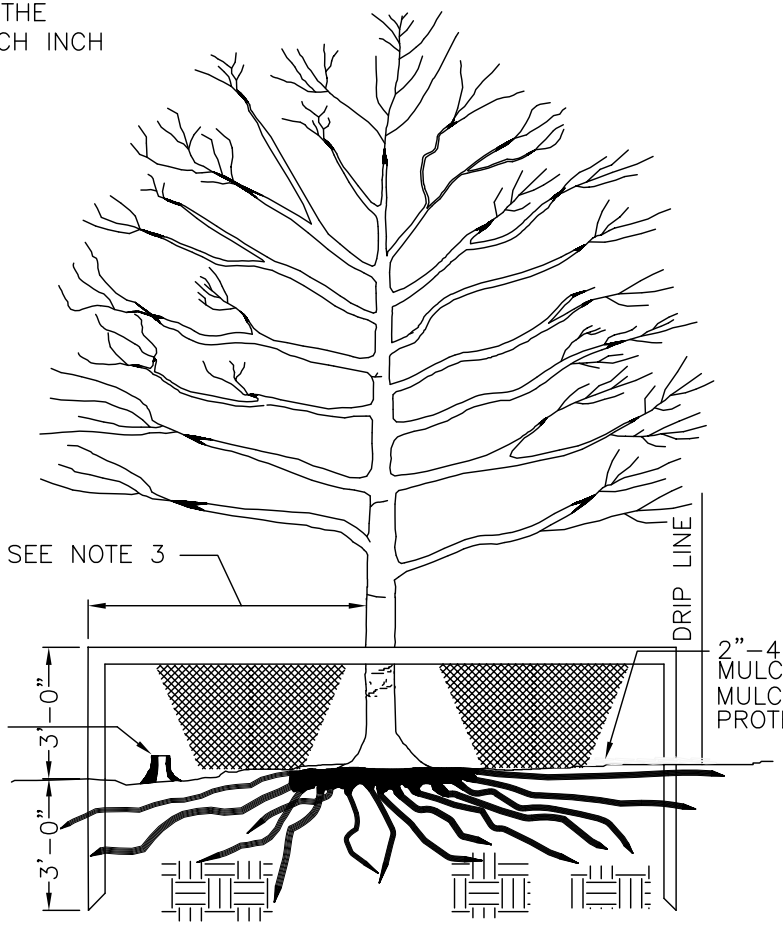

DEAD TREES AND SCRUB OR UNDER GROWTH SHALL BE CUT FLUSH WITH ADJACENT GRADE. NO GRUBBING ALLOWED UNDER DRIP LINE.

2"x4" STANDARDS + 1"x4" RAILS OR ORANGE SAFETY FENCING MAY BE USED.

	TOWN OF WAXHAW LAND DEVELOPMENT STANDARDS	TREE PROTECTION DETAIL	STD. NO. 601.1 / REV.

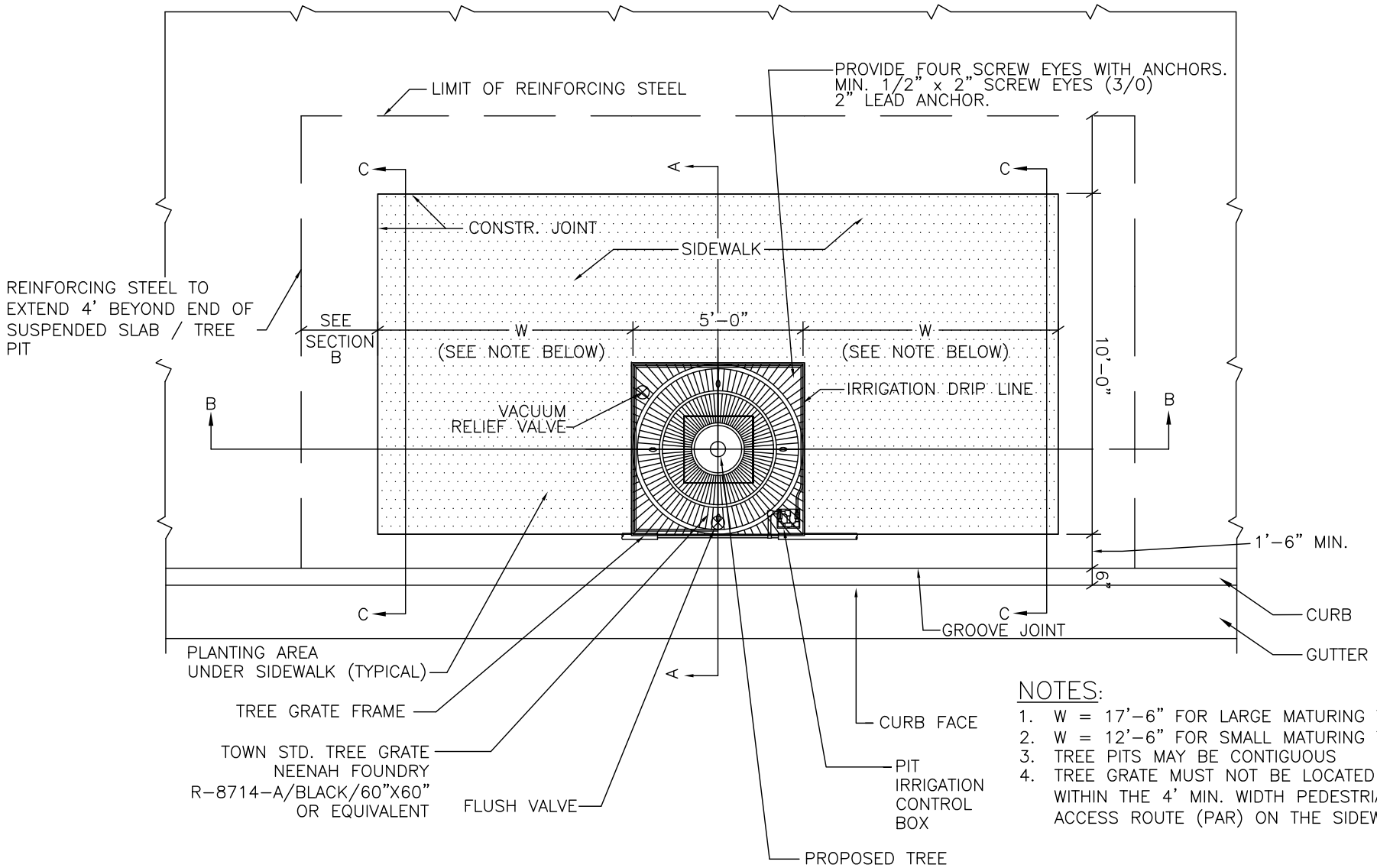

NOTES:

1. W = 17'-6" FOR LARGE MATURING TREE.
2. W = 12'-6" FOR SMALL MATURING TREE.
3. TREE PITS MAY BE CONTIGUOUS
4. TREE GRATE MUST NOT BE LOCATED WITHIN THE 4' MIN. WIDTH PEDESTRIAN ACCESS ROUTE (PAR) ON THE SIDEWALK.

	TOWN OF WAXHAW LAND DEVELOPMENT STANDARDS	LARGE AND SMALL MATURING TREE PIT WITH GRATE IN SIDEWALK (PLAN)	STD. NO. 602.1 / REV.

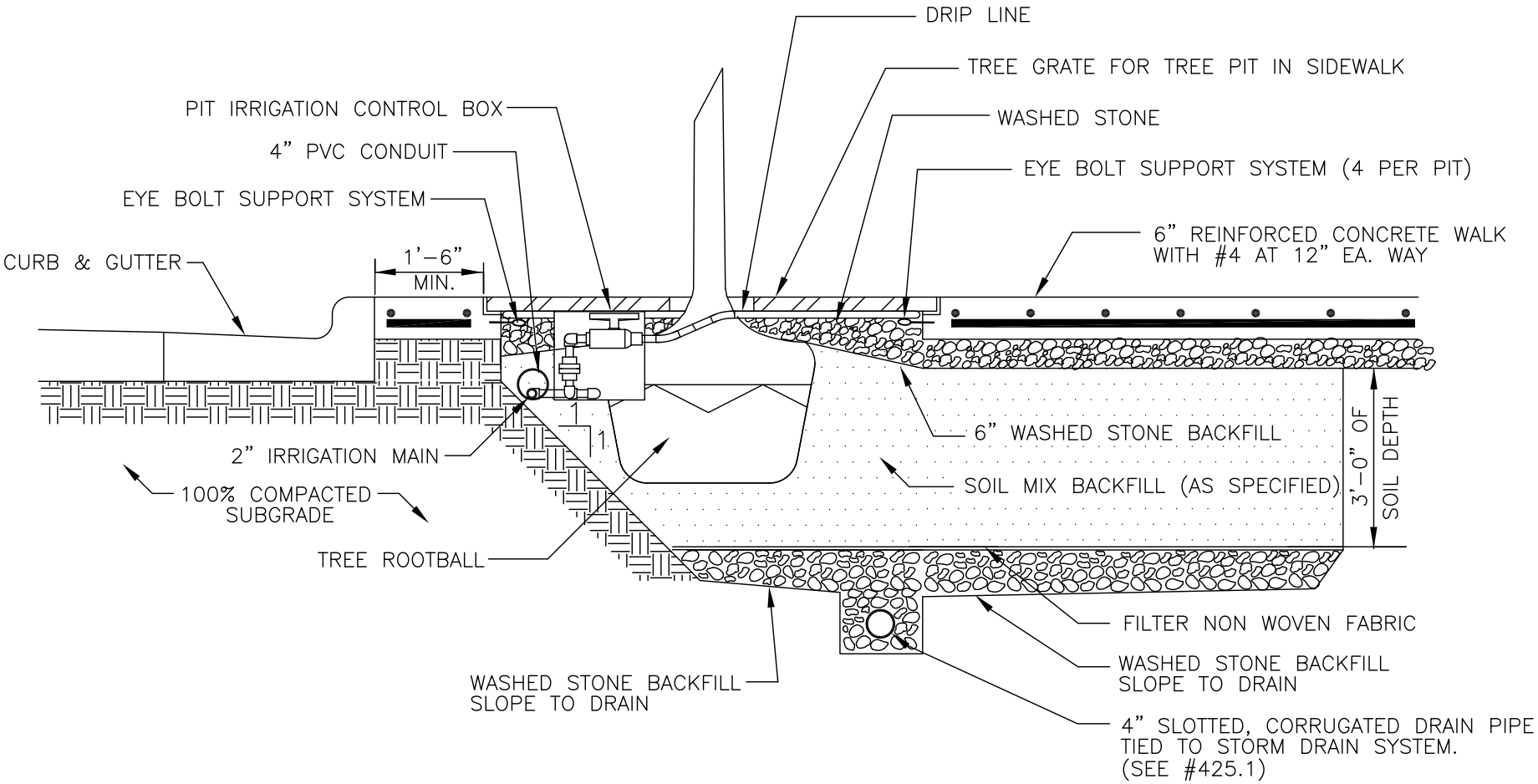

SECTION A

	TOWN OF WAXHAW LAND DEVELOPMENT STANDARDS	LARGE AND SMALL MATURING TREE PIT WITH GRATE IN SIDEWALK (SECTION)	STD. NO. 603.1 / REV.

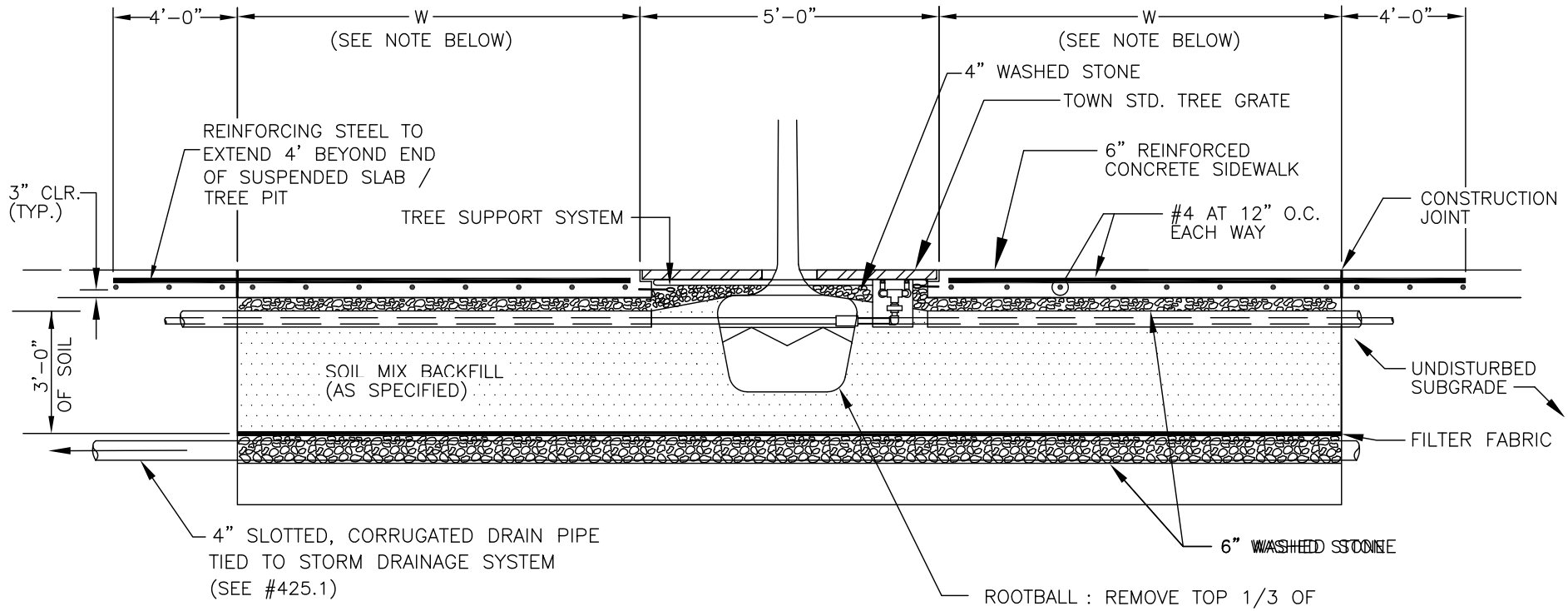

NOTE:
W = 17'-6" FOR LARGE MATURING TREE.
W = 12'-6" FOR SMALL MATURING TREE.
TREE PITS MAY BE CONTIGUOUS

SECTION B

	TOWN OF WAXHAW LAND DEVELOPMENT STANDARDS	LARGE AND SMALL MATURING TREE PIT WITH GRATE IN SIDEWALK (SECTION)	STD. NO. 604.1 / REV.

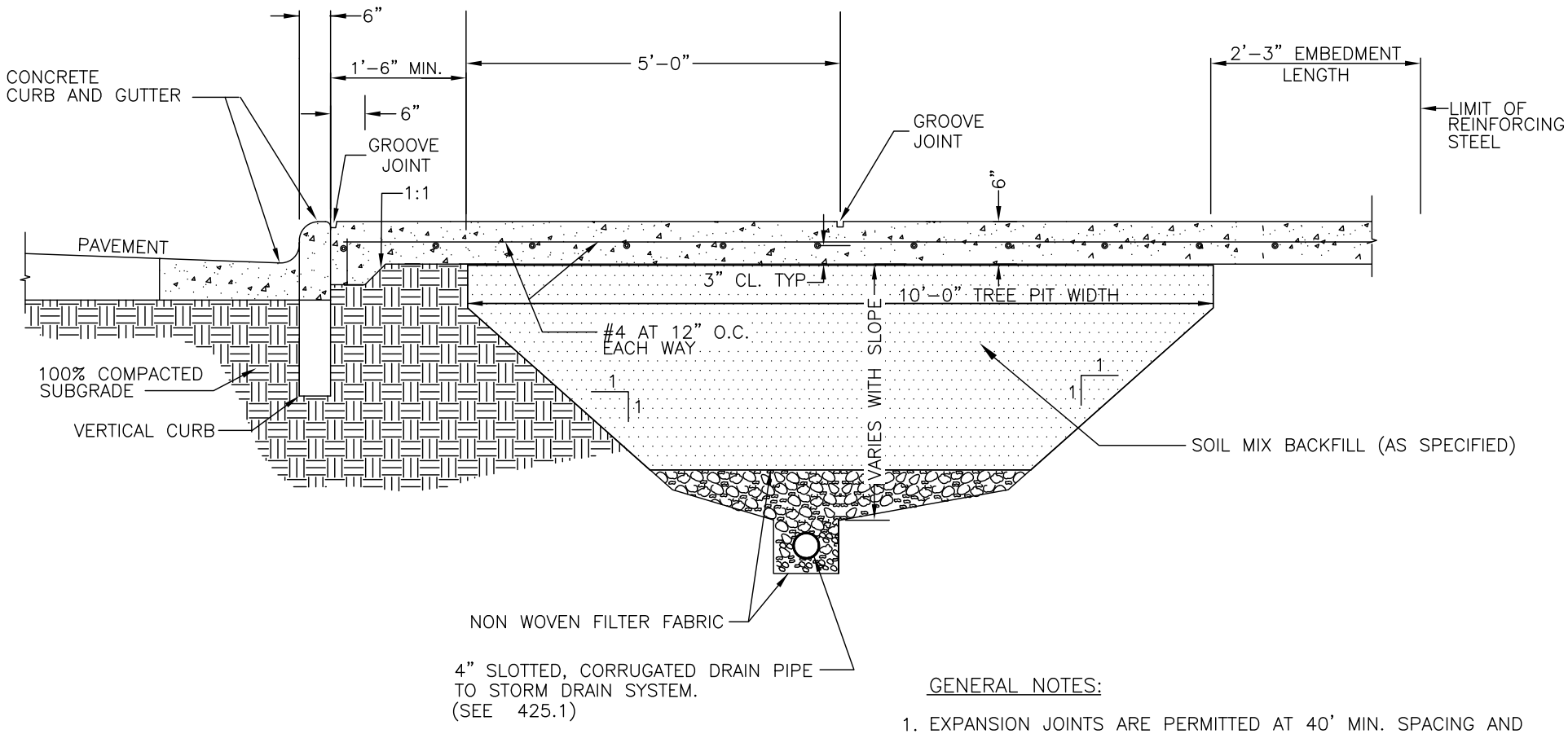

SECTION C

NOTE

A DRAINAGE SYSTEM IS REQUIRED AS SHOWN FOR ALL IRRIGATED PLANTING AREAS LOCATED ADJACENT TO STREET.

GENERAL NOTES:

1. EXPANSION JOINTS ARE PERMITTED AT 40' MIN. SPACING AND NOT LESS THAN 12'-6" FROM CENTER OF TREE GRATE.
2. SEE STANDARD DETAIL OF GROOVE JOINT.
3. CONCRETE SHALL BE 3600 PSI. IN 28 DAYS.
4. ALL REINFORCING STEEL SHALL BE GRADE 60.
5. USE REINFORCED STEEL BAR SUPPORTS IN COMPLIANCE WITH N.C.D.O.T. STANDARD SPECIFICATION 970-4.

	TOWN OF WAXHAW LAND DEVELOPMENT STANDARDS	LARGE AND SMALL TREE PIT WITH GRATE IN SIDEWALK (SECTION)	STD. NO. 605.1 / REV.

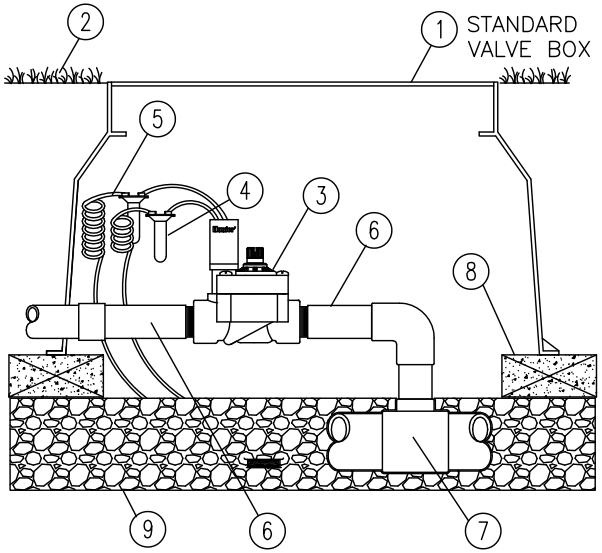

CONTROL VALVE

2 FINISH GRADE
3 CONTROL VALVE WITH FLOW CONTROL
4 WATERPROOF CONNECTORS (2)
5 18–24" COILED WIRE
6 SCH 80 T.O.E. NIPPLE
7 MAIN LINE PIPE & FITTINGS
8 BRICK SUPPORTS (4)
9 3/4" MINUS WASHED GRAVEL, MIN. 3" DEPTH
10 PRESSURE REGULATOR
11 FILTER

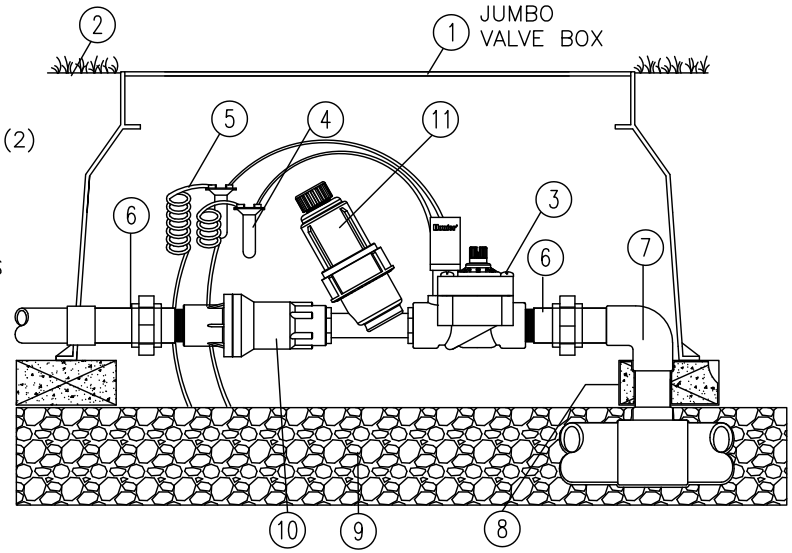

DRIP IRRIGATION W/ PRESSURE REGULATOR AND FILTER

	TOWN OF WAXHAW LAND DEVELOPMENT STANDARDS	TYPICAL VALVE AND VALVE BOX INSTALLATION

STD. NO.	REV.
606.1	

NOTES:

1. SCARIFY ROOT MASS OF CONTAINERIZED PLANT MATERIAL.
2. INSTALL CONTAINERIZED PLANTS AT FINSHED GRADE
3. TAMP PLANTING MIX FIRMLY AS PIT IS FILLED AROUND EACH PLANT BALL.
4. OMIT COLLAR AROUND EACH SHRUB WHEN IRRIGATION SYSTEM IS PRESENT.
5. SOAK EACH PLANT BALL AND PIT IMMEDIATELY AFTER INSTALLATION.

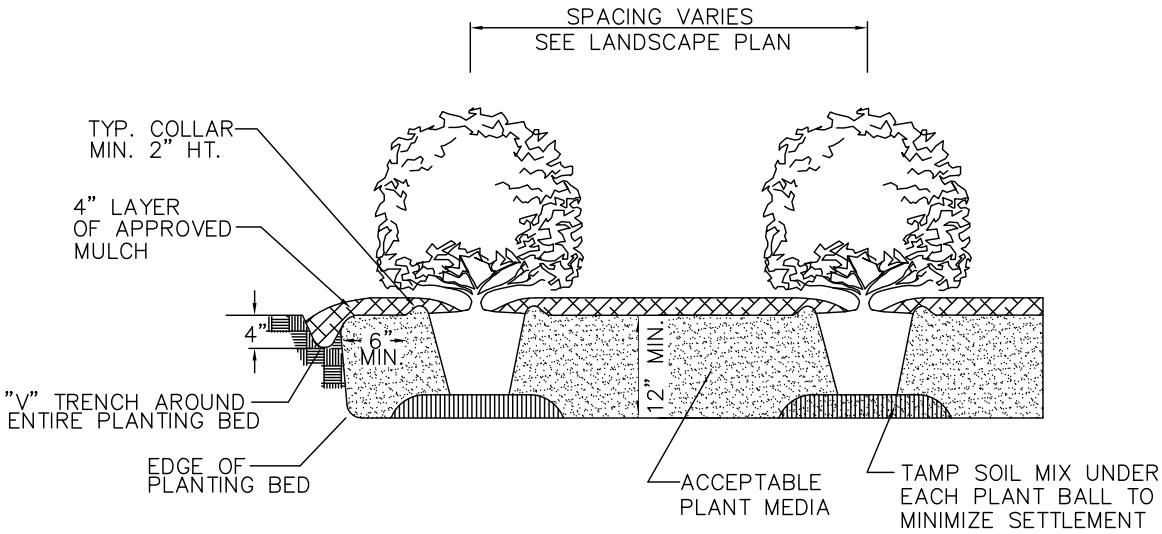

TYPICAL PLANTING BED DETAIL

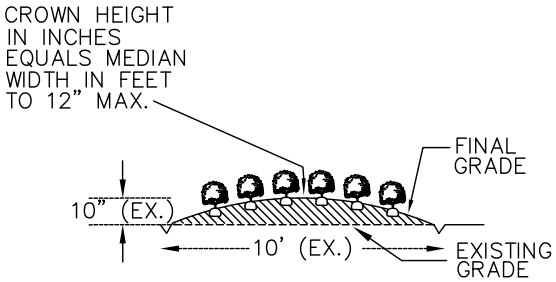

TYPICAL BED CROWNING

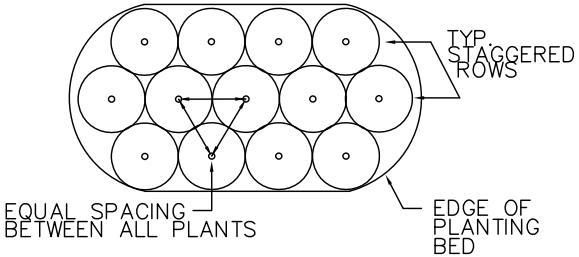

TYPICAL PLANTING BED PLAN

	TOWN OF WAXHAW LAND DEVELOPMENT STANDARDS	SHRUB PLANTING BED	STD. NO. 610.1 / REV.

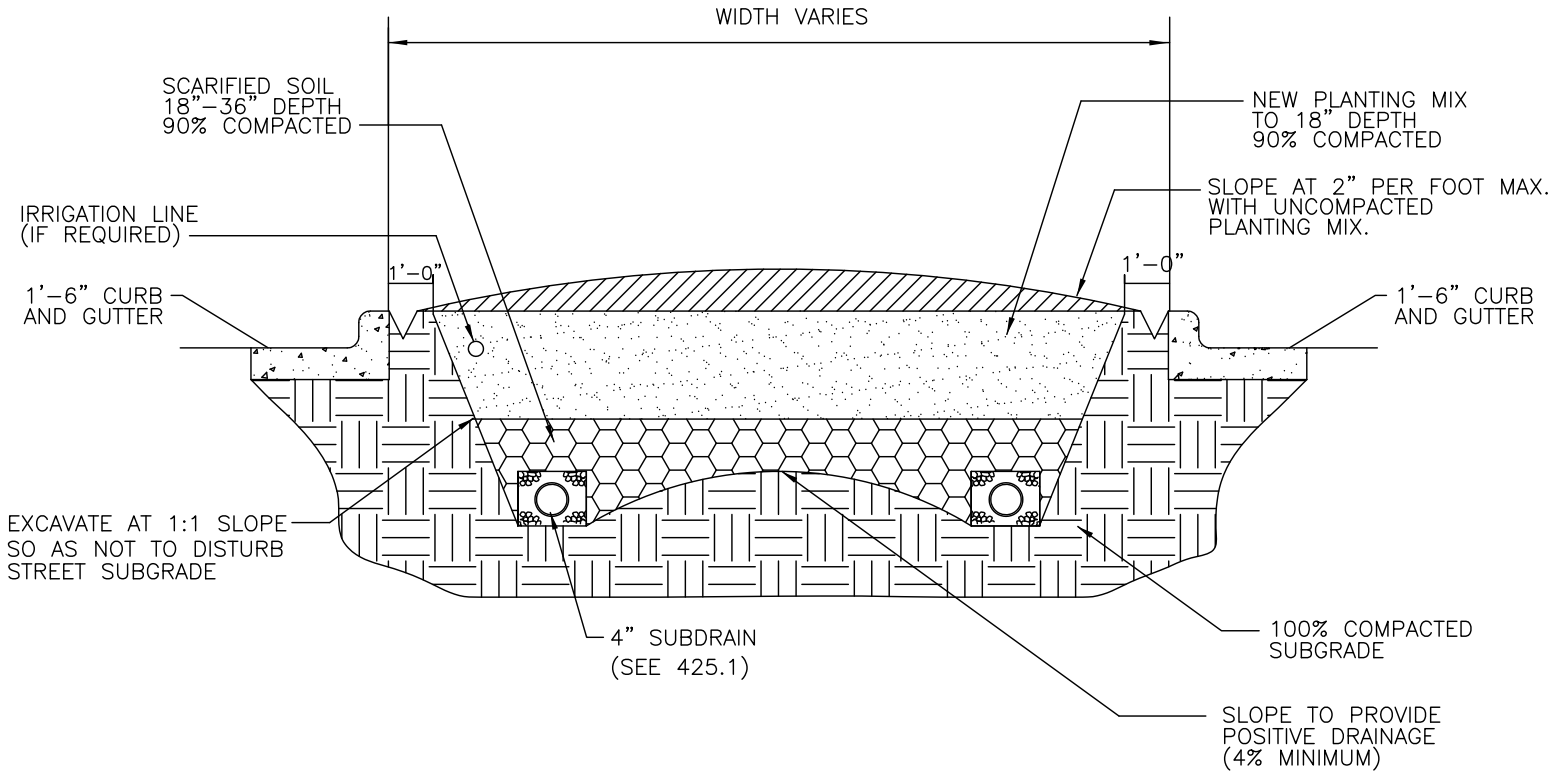

NOTES:

1. FOR NEW PLANTING AREAS, REMOVE ALL PAVEMENT, GRAVEL, SUB–BASE AND CONSTRUCTION DEBRIS BEFORE PREPARING SOIL AND PLANTING TREES.

2. REMOVE SOIL TO A DEPTH OF 18". SCARIFY, TILL OR OTHERWISE LOOSEN THE REMAINING SOIL TO A DEPTH OF 18". ADD NEW PLANTING MIX AS SPECIFIED.

3. SUBSURFACE DRAINAGE SHALL BE INSTALLED IN ALL MEDIANS AND TIED INTO EXISTING STORM DRAIN SYSTEM. A 4 INCH PERFORATED CORRUGATED PVC DRAIN OR HDPE PER AASHTO M252, TYPE CP (SINGLE–WALL, CORRUGATED) SHALL BE INSTALLED IN EACH MEDIAN AT THE BOTTOM OF THE EXCAVATED AREA. DRAIN SHALL BE COVERED WITH A MINIMUM 6 INCHES OF #57 WASHED STONE, THEN WRAPPED WITH A SPECIFIED NON–WOVEN GEOTEXTILE FABRIC. SPECIAL CARE SHALL BE EXERCISED WHEN FILLING MEDIANS WITH SOIL SO NOT TO CRUSH OR DAMAGE THE DRAINAGE SYSTEM.

TOWN OF WAXHAW LAND DEVELOPMENT STANDARDS	MEDIAN GREATER THAN 120 INCHES EXCAVATION, DRAINAGE AND BACKFILL	STD. NO. 611.1	REV.

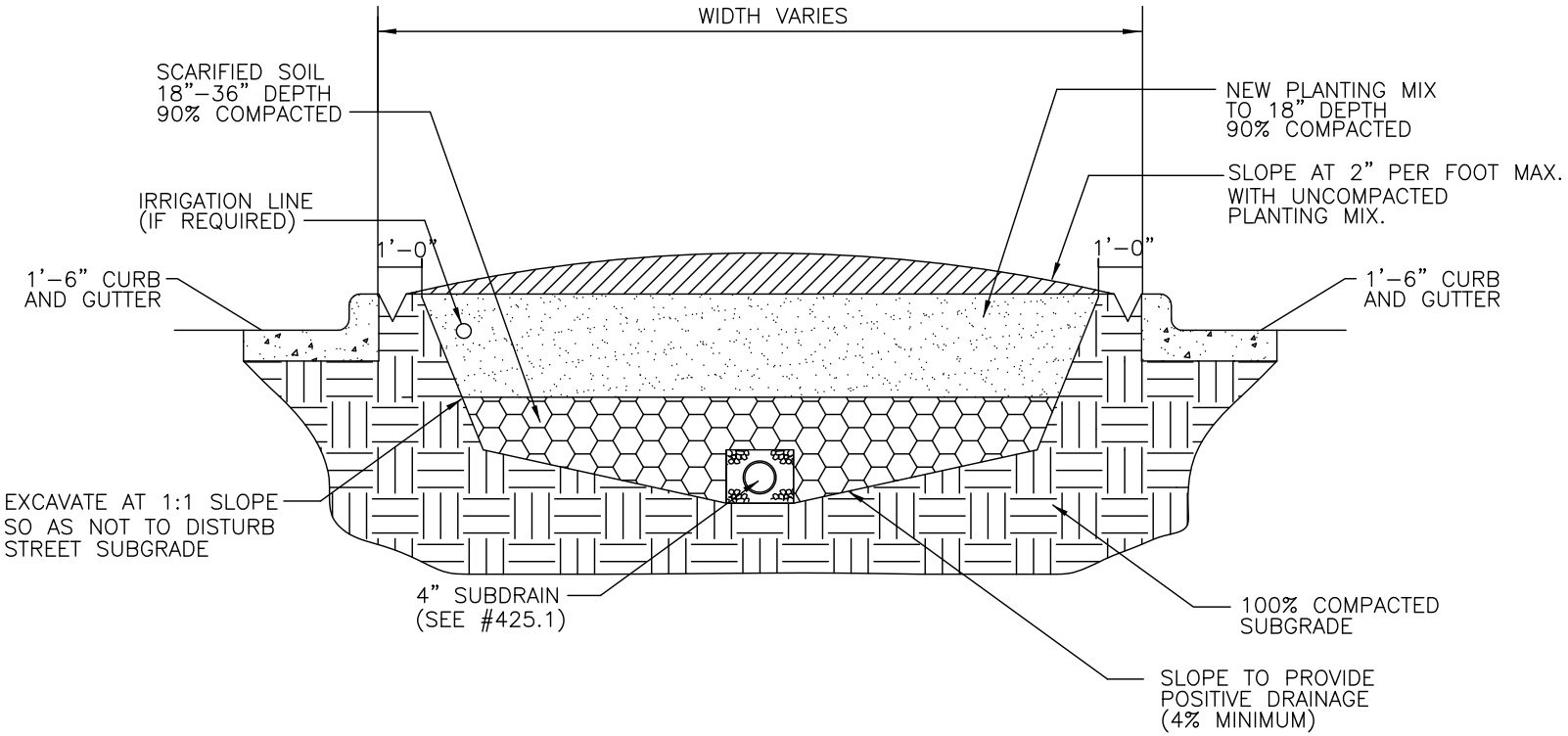

NOTES:

1. FOR NEW PLANTING AREAS, REMOVE ALL PAVEMENT, GRAVEL, SUB–BASE AND CONSTRUCTION DEBRIS BEFORE PREPARING SOIL AND PLANTING TREES.

2. REMOVE SOIL TO A DEPTH OF 18". SCARIFY, TILL OR OTHERWISE LOOSEN THE REMAINING SOIL TO A DEPTH OF 18". ADD NEW PLANTING MIX AS SPECIFIED.

3. SUBSURFACE DRAINAGE SHALL BE INSTALLED IN ALL MEDIANS AND TIED INTO EXISTING STORM DRAIN SYSTEM. A 4 INCH PERFORATED CORRUGATED PVC DRAIN OR HDPE PER AASHTO M252, TYPE CP (SINGLE–WALL, CORRUGATED) SHALL BE INSTALLED IN EACH MEDIAN AT THE BOTTOM OF THE EXCAVATED AREA. DRAIN SHALL BE COVERED WITH A MINIMUM 6 INCHES OF #57 WASHED STONE, THEN WRAPPED WITH A SPECIFIED NON–WOVEN GEOTEXTILE FABRIC. SPECIAL CARE SHALL BE EXERCISED WHEN FILLING MEDIANS WITH SOIL SO NOT TO CRUSH OR DAMAGE THE DRAINAGE SYSTEM.

	TOWN OF WAXHAW **LAND DEVELOPMENT STANDARDS**	73 TO 120 INCH MEDIAN EXCAVATION, DRAINAGE AND BACKFILL	STD. NO. 612.1 / REV.

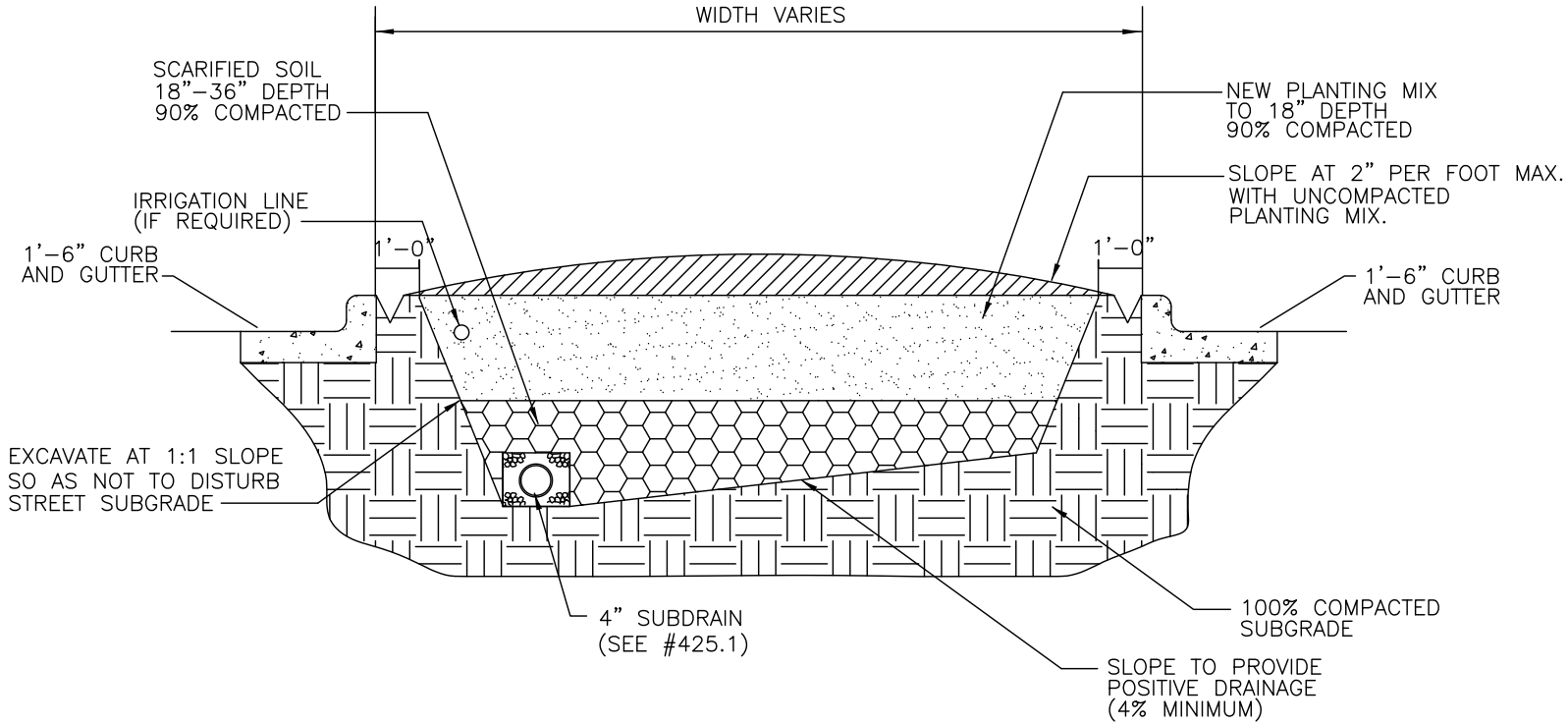

NOTES:

1. FOR NEW PLANTING AREAS, REMOVE ALL PAVEMENT, GRAVEL, SUB–BASE AND CONSTRUCTION DEBRIS BEFORE PREPARING SOIL AND PLANTING TREES.

2. REMOVE SOIL TO A DEPTH OF 18". SCARIFY, TILL OR OTHERWISE LOOSEN THE REMAINING SOIL TO A DEPTH OF 18". ADD NEW PLANTING MIX AS SPECIFIED.

3. SUBSURFACE DRAINAGE SHALL BE INSTALLED IN ALL MEDIANS AND TIED INTO EXISTING STORM DRAIN SYSTEM. A 4 INCH PERFORATED CORRUGATED PVC DRAIN OR HDPE PER AASHTO M252, TYPE CP (SINGLE–WALL, CORRUGATED) SHALL BE INSTALLED IN EACH MEDIAN AT THE BOTTOM OF THE EXCAVATED AREA. DRAIN SHALL BE COVERED WITH A MINIMUM 6 INCHES OF #57 WASHED STONE, THEN WRAPPED WITH A SPECIFIED NON–WOVEN GEOTEXTILE FABRIC. SPECIAL CARE SHALL BE EXERCISED WHEN FILLING MEDIANS WITH SOIL SO NOT TO CRUSH OR DAMAGE THE DRAINAGE SYSTEM.

	TOWN OF WAXHAW **LAND DEVELOPMENT STANDARDS**	48 TO 72 INCH MEDIAN EXCAVATION, DRAINAGE AND BACKFILL	STD. NO. 613.1 / REV.

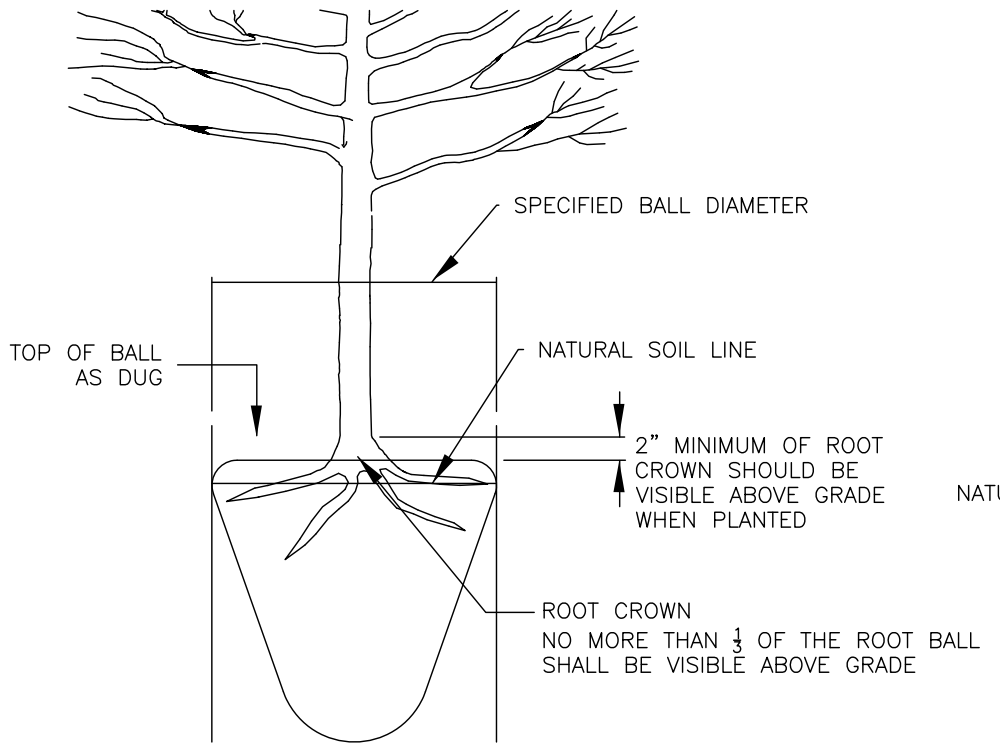

ACCEPTABLE CONDITION

(AS DELIVERED)

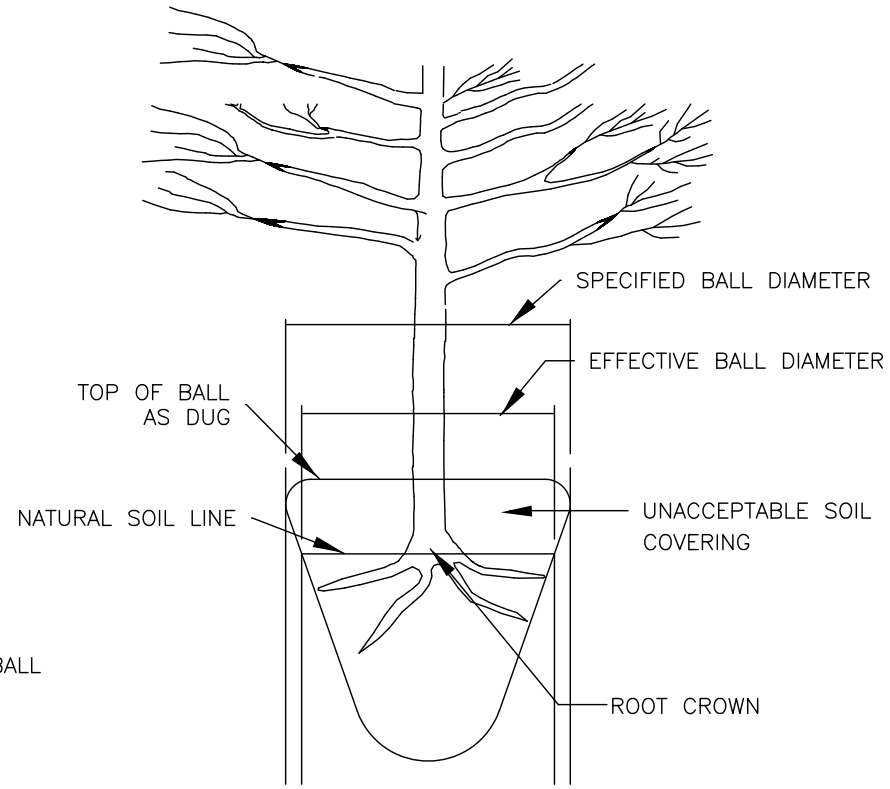

UNACCEPTABLE CONDITION

(AS DELIVERED)

NOTE:

1. A ROOT FLARE EXCAVATION FOR ALL TREES SPECIFIED WILL BE DONE BY THE ARBORIST TO ENSURE THAT TREES WERE NOT PLANTED/GROWN TOO DEEPLY AT SOURCE (NURSERY). LANDSCAPE CONTRACTOR SHALL HAVE SUPPLIER MARK GROUND LEVEL LINE ABOVE ROOT BALL. IF ARBORIST DETERMINES THAT THERE IS EXCESSIVE SOIL OVER THE ROOT CROWN, THESE TREES WILL BE REJECTED.
2. NO TREES ARE TO BE PLANTED UNTIL THE ARBORIST HAS INSPECTED AND APPROVED EACH TREE.

	TOWN OF WAXHAW LAND DEVELOPMENT STANDARDS	ROOT FLARE DEPTHS (TREE ROOT BALL CONDITION ON TREES FROM SUPPLIERS)	STD. NO. 614.1 / REV.

PLANTINGS IN STREET RIGHT-OF-WAY

GENERAL NOTES

1. TREE GRATES AND ASSOCIATED IRRIGATION SYSTEMS ARE REQUIRED AT VARIOUS LOCATIONS IN THE DOWNTOWN AREAS TO COMPLY WITH THE DOWNTOWN STREETSCAPE GUIDELINES AND OTHER ZONING REQUIREMENTS. ALL OTHER INSTALLATIONS OF IRRIGATION SYSTEMS WITHIN THE RIGHT-OF-WAY OF TOWN OR STATE MAINTAINED STREETS REQUIRE AN ENCROACHMENT AGREEMENT EXECUTED THROUGH TOWN OR NCDOT. THE TOWN'S ENCROACHMENT AGREEMENT REVIEW/APPROVAL PROCESS MAY INCLUDE ADDITIONAL REQUIREMENTS. CONTACT TOWNS DEVELOPMENT SERVICES DEPARTMENT FOR ADDITIONAL INFORMATION REGARDING COST, SUBMITTAL, AND LIABILITY INSURANCE COVERAGE REQUIREMENTS.

2. AN INSPECTION SCHEDULE IS NEEDED FOR TREES THAT WILL BE PLANTED IN THE STREET RIGHT OF WAY DUE TO ZONING OR OTHER REQUIREMENTS. LANDSCAPE INSPECTION INCLUDE THE FOLLOWING:

   SUBDRAINAGE INSPECTION
   TREE PIT/WELL OR PLANTING STRIP INSPECTION
   SOIL MIX APPROVALS/INSPECTIONS
   TREE APPROVALS/INSPECTIONS – PRIOR TO PURCHASING THE TREES, TO BE MADE BY THE ARBORIST.
   THIS MAY INCLUDE PHOTO APPROVAL OR PARTICIPATION IN TAGGING THE TREES.
   TREE PLANTING INSPECTION
   IRRIGATION INSPECTION
   FINAL WALK THROUGH

ALL OF THE ABOVE INSPECTIONS WILL BE PERFORMED BY THE ARBORIST EXCEPT FOR THE TREE APPROVALS AS NOTED.

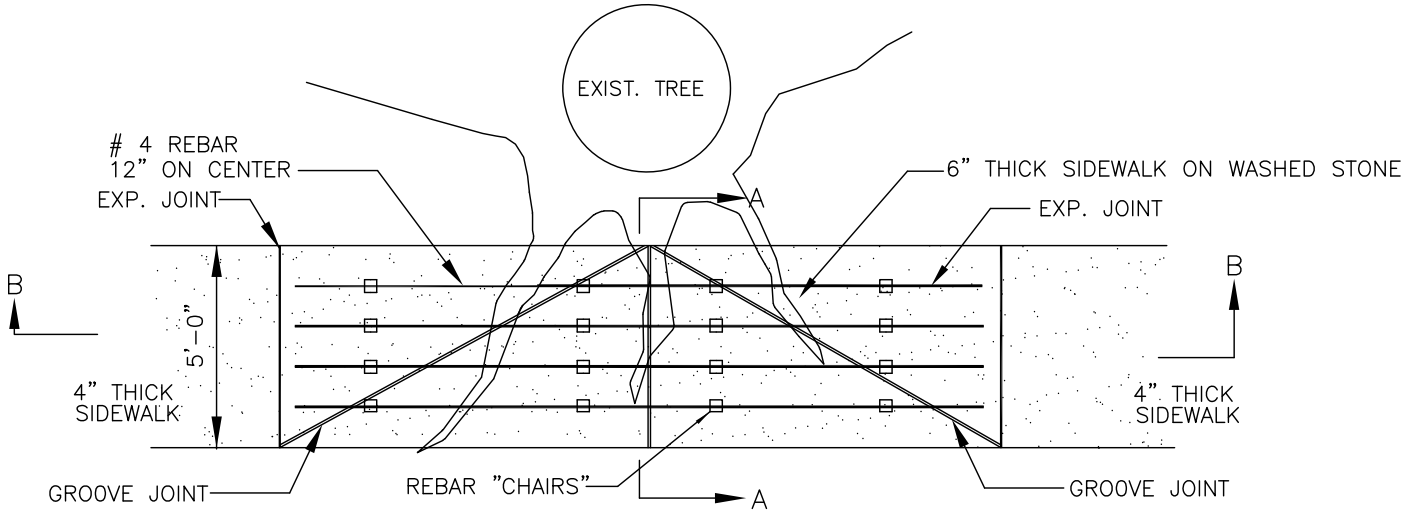

PLAN VIEW

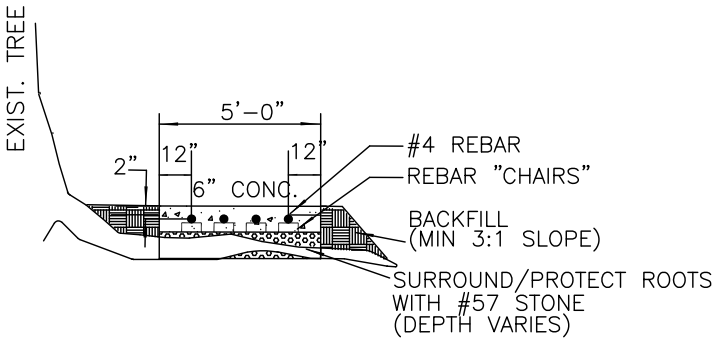

SECTION A–A

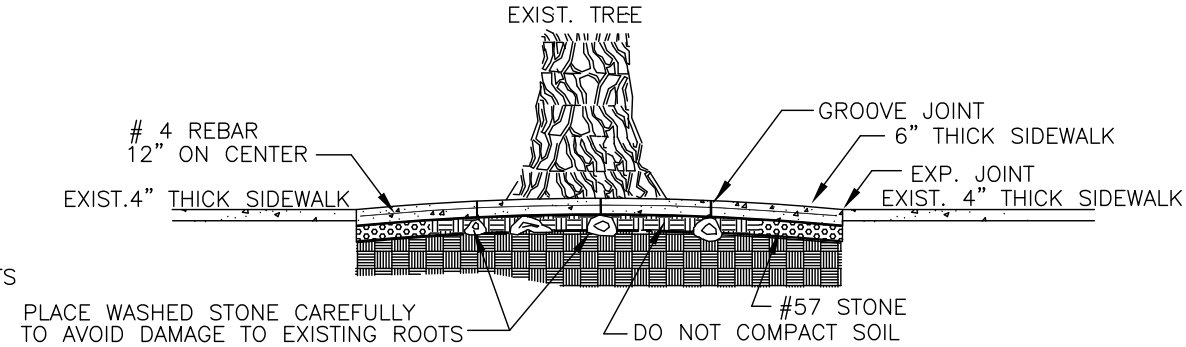

SECTION B–B

	TOWN OF WAXHAW LAND DEVELOPMENT STANDARDS	REINFORCED CONCRETE SIDEWALK (BRIDGING TREE ROOTS)	STD. NO. 616.1 / REV.

NOTES:

1. THIS TREE BUMPER DETAIL SHALL BE USED WHEN WORKING WITHIN 10' OF AN EXISTING TREE TO BE PROTECTED.
2. ALL TREES SHALL BE SAVED UNLESS NOTED OTHERWISE ON THE PLANS OR DIRECTED BY THE ENGINEER.
3. LUMBER, WIRE, AND SANDBAGS MAY BE REUSED AT OTHER TREES.
4. THE INTENT OF THIS DETAIL IS TO PROTECT EXISTING TREES FROM DAMAGE DURING CONSTRUCTION ESPECIALLY FROM BACKHOE ARM SWING. AN ALTERNATE APPROACH MAY BE USED IF APPROVED IN WRITING BY THE ENGINEER AFTER CONSULTATION WITH THE ARBORIST OR HIS DULY AUTHORIZED REPRESENTATIVE.

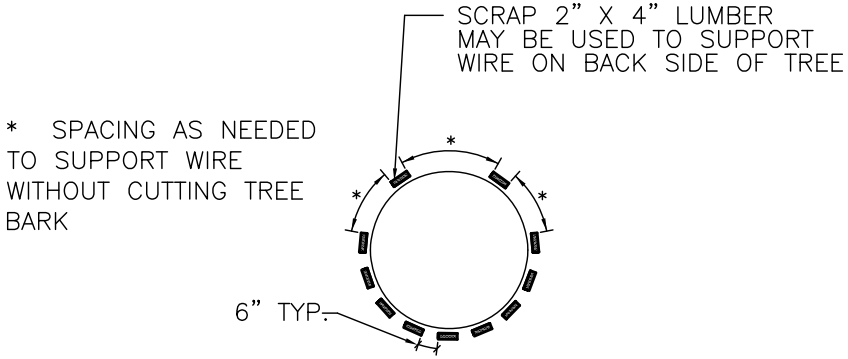

PLAN VIEW

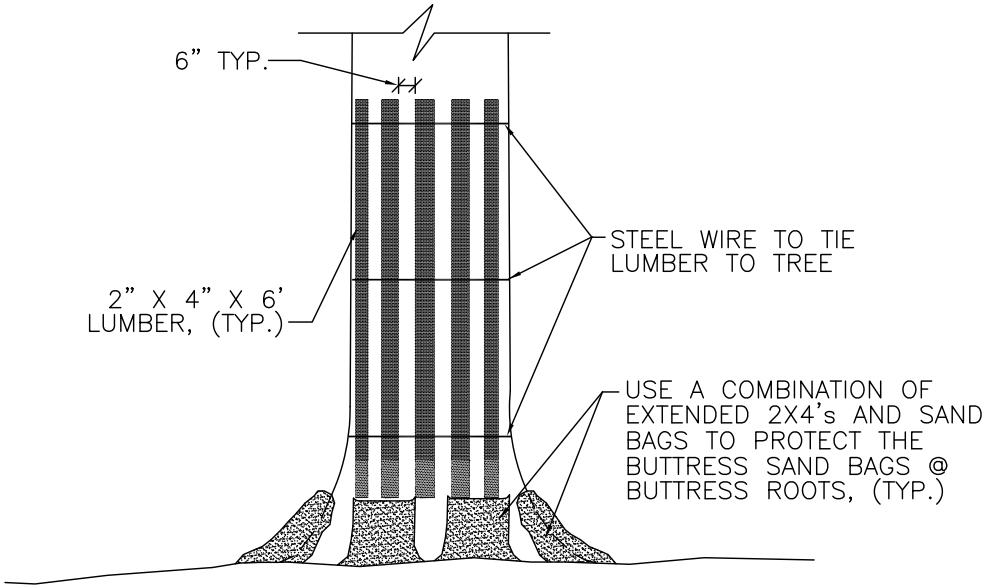

ELEVATION VIEW

	TOWN OF WAXHAW LAND DEVELOPMENT STANDARDS	TEMPORARY TREE PROTECTION DETAIL	STD. NO. 617.1 / REV.

NOTES:

1. CONTRACTOR SHALL USE EXTREME CAUTION WHEN WORKING NEAR EXISTING TREES.
2. WHERE EXISTING TREES ARE WITHIN 4' OF THE PROPOSED BACK OF CURB, THE PROPOSED CURB SHALL END A MINIMUM OF 12" FROM THE TREE'S BUTTRESS ROOTS.
3. CONTRACTOR SHALL COORDINATE WITH THE COUNTY ARBORIST TO IDENTIFY TREES FOR WHICH THIS DETAIL APPLIES PRIOR TO CONSTRUCTION NEAR THE TREE(S).
4. NO TREES SHALL BE REMOVED UNLESS CLEARLY SPECIFIED ON THE PLANS OR IDENTIFIED BY THE ENGINEER.
5. AVOID FILL PLACEMENT NEAR TREE.

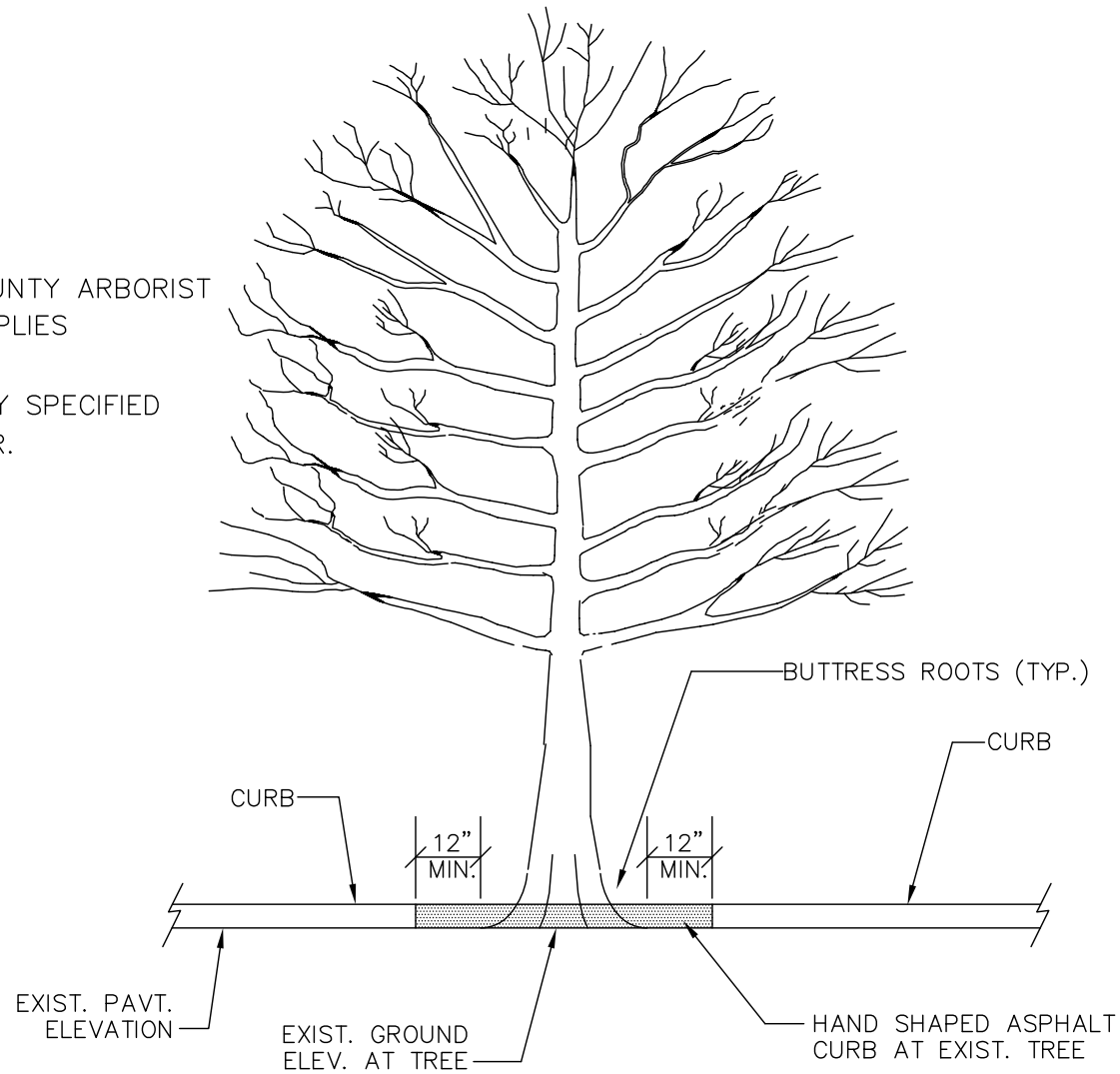

	TOWN OF WAXHAW LAND DEVELOPMENT STANDARDS	ASPHALT CURB PLACEMENT AT EXISTING TREES	STD. NO. 618.1 / REV.

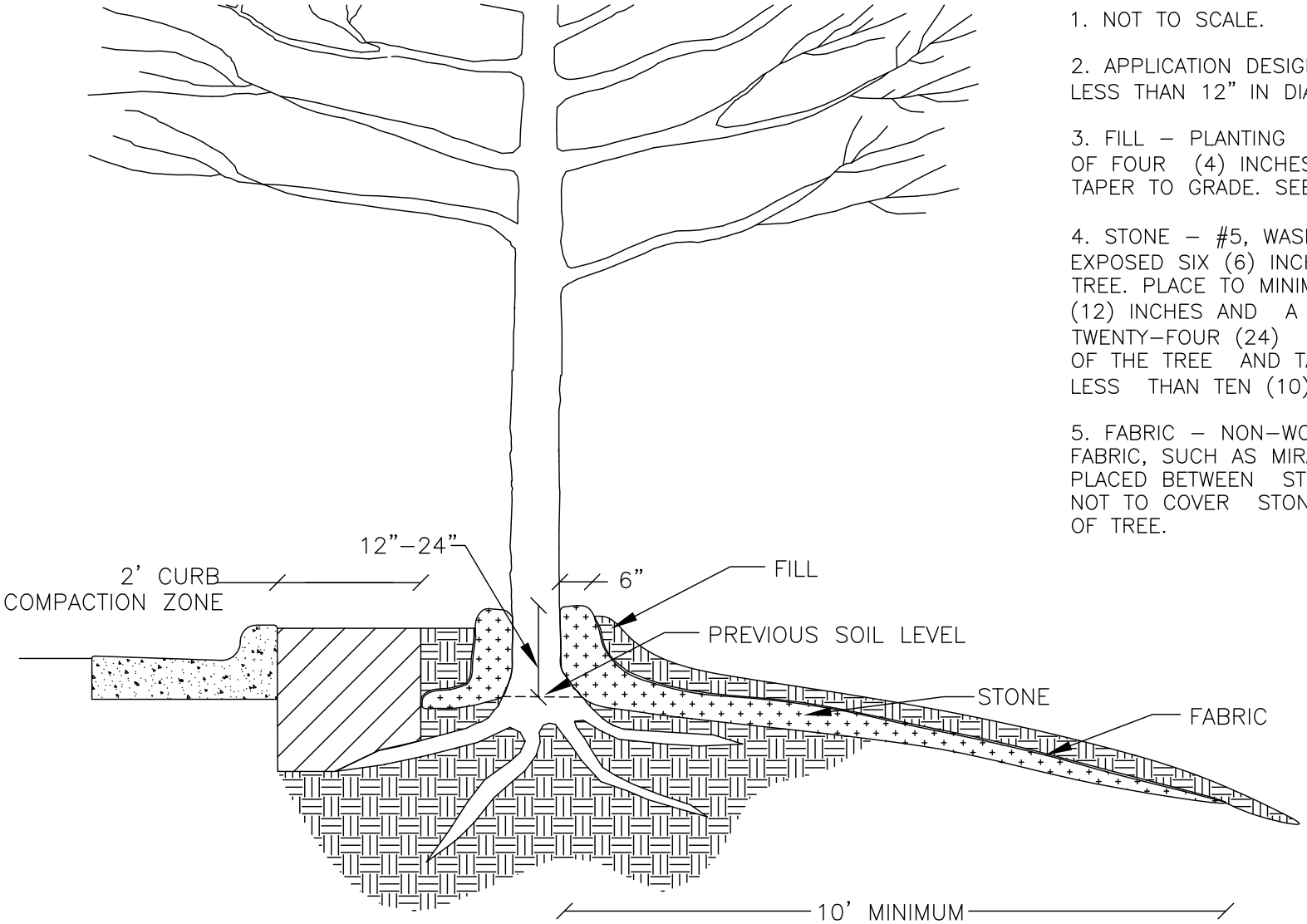

NOTES:

1. NOT TO SCALE.

2. APPLICATION DESIGNED FOR TREES NO LESS THAN 12" IN DIAMETER.

3. FILL – PLANTING MIX. APPLY TO A DEPTH OF FOUR (4) INCHES AT BASE OF TREE, TAPER TO GRADE. SEED AND MULCH.

4. STONE – #5, WASHED. MAINTAIN EXPOSED SIX (6) INCH WIDTH AT TRUNK OF TREE. PLACE TO MINIMUM DEPTH OF TWELVE (12) INCHES AND A MAXIMUM OF TWENTY–FOUR (24) INCHES AT THE BASE OF THE TREE AND TAPER OUTWARD TO NO LESS THAN TEN (10) FEET.

5. FABRIC – NON–WOVEN GEOTEXTILE FABRIC, SUCH AS MIRAFI OR EQUIVALENT, PLACED BETWEEN STONE AND FILL. IT IS NOT TO COVER STONE EXPOSED AT TRUNK OF TREE.

	TOWN OF WAXHAW LAND DEVELOPMENT STANDARDS	ROCK CHIMNEY	STD. NO. 619.1 / REV.

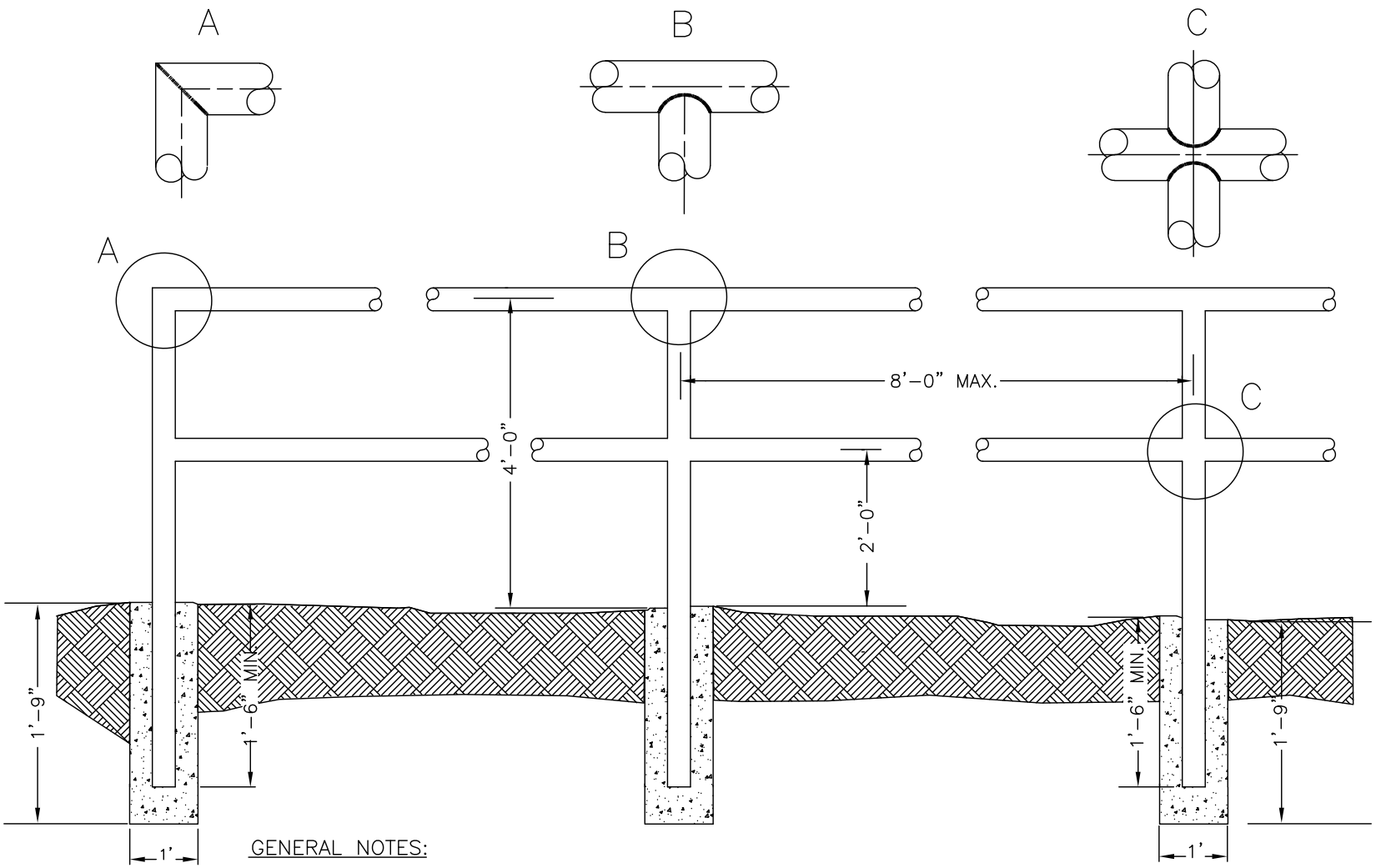

GENERAL NOTES:

1. ALL CONCRETE TO BE 3600 P.S.I. COMPRESSIVE STRENGTH.
2. TYPE OF PIPE TO BE USED IS 1-5/8" MAX. O.D. BLACK IRON, LOW CARBON PIPE OR GALVANIZED.
3. ALL JOINTS TO HAVE A 1/2" FILLET WELD AT ALL JOINTS.
4. AFTER INSTALLATION PAINT ASSMBLY WITH BLACK ALL WEATHER ENAMEL.
5. SEE DETAIL 701.1 FOR WARRANTS

NOT TO SCALE

TOWN OF WAXHAW LAND DEVELOPMENT STANDARDS	SAFETY RAIL	STD. NO. 700.1 / REV.

WARRANTS

STANDARD SAFETY RAIL (STD. #700.1) SHALL BE INSTALLED UNDER ANY OF THE FOLLOWING CIRCUMSTANCES IN BOTH NEW CONSTRUCTION AND IN RETROFITTING OR RECONSTRUCTION OF EXISTING ROADWAYS OR SITES:

1. WHEN THE CULVERT CROSSING DETAIL APPLIES.
2. IF THERE IS A TWO FOOT OR GREATER DROPOFF WITHIN 2 FEET OF TH EDGE OF THE SIDEWALK (SEE DIAGRAM A).
3. IF THERE IS A 1–FOOT OR LARGER DROPOFF DIRECTLY ADJACENT TO THE SIDEWALK EDGE (SEE DIAGRAM B).
4. AT THE TOP OF ANY DROPOFF WITHIN THE PEDESTRIAN CLEAR ZONE OR WHERE PEDESTRIANS CAN REASONABLY BE EXPECTED IN THE VICINITY.
5. AT THE DIRECTION OF DEVELOPMENT SERVICES STAFF BASED ON FIELD CONDITIONS.

DEFINITIONS

- DROPOFF –– A SLOPE OF 2:1 OR STEEPER. EXAMPLES INCLUDE HEADWALLS, RETAINING WALLS, AND CULVERTS.
- PEDESTRIAN CLEAR ZONE –– 10 FEET OF ANY COMBINATION OF SIDEWALK, SLOPE, AND SHOULDER SLOPED AT 6:1 OR FLATTER. SIDEWALK DOES NOT NEED TO BE PRESENT.
- SIDEWALK –– FOR PURPOSES OF THIS STANDARD, THE TERM "SIDEWALK" IS USED GENERICALLY AND SHALL MEAN ANY PATH OR SURFACE TO BE USED FOR BICYCLE AND/OR PEDESTRIAN TRANSPORTATION. EXAMPLES INCLUDE, BUT ARE NOT LIMITED TO, SIDEWALKS, BIKE PATHS, SHARED–USE PATHS, PEDESTRIAN PATHS, AND GREENWAYS.

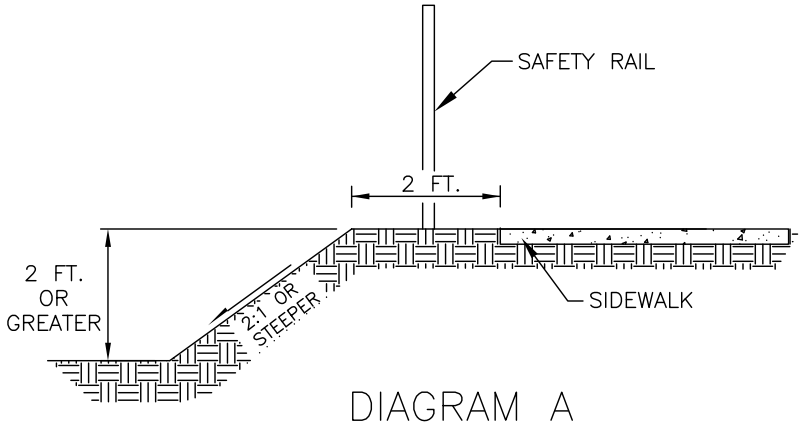

DIAGRAM A

SLOPED DROPOFF AT BACK OF SIDEWALK

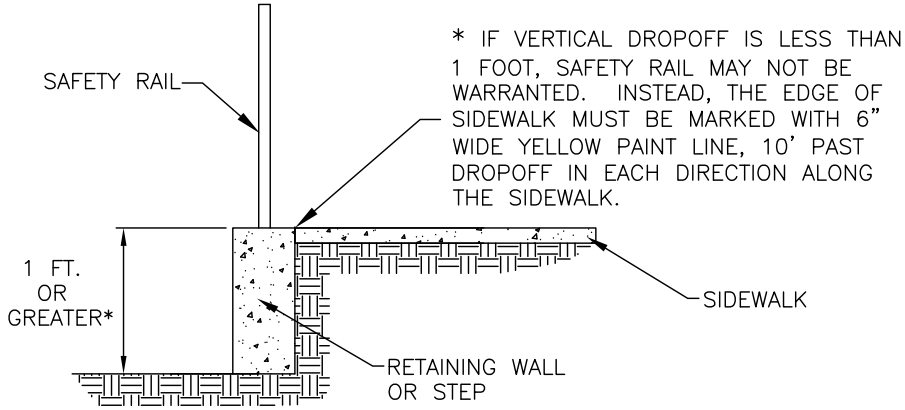

DIAGRAM B

VERTICAL DROPOFF AT BACK OF SIDEWALK

NOT TO SCALE

	TOWN OF WAXHAW LAND DEVELOPMENT STANDARDS	SAFETY RAIL WARRANTS	STD. NO. 701.1 / REV.

SIGN

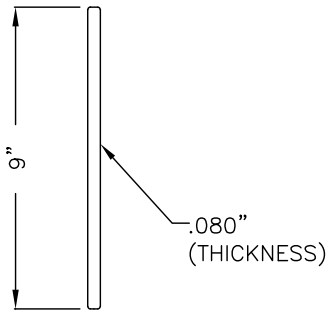

POST
(14 GAUGE)

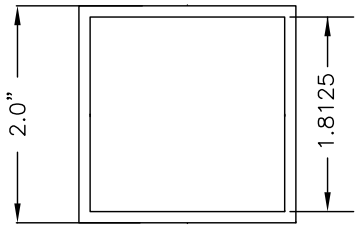

SQUARE–FIT SLEEVE
(12 GAUGE)

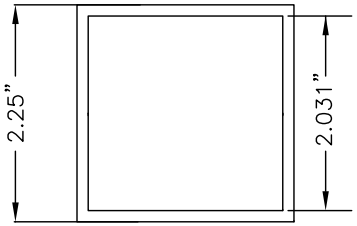

STREET NAME SIGN
POST INSTALLATION

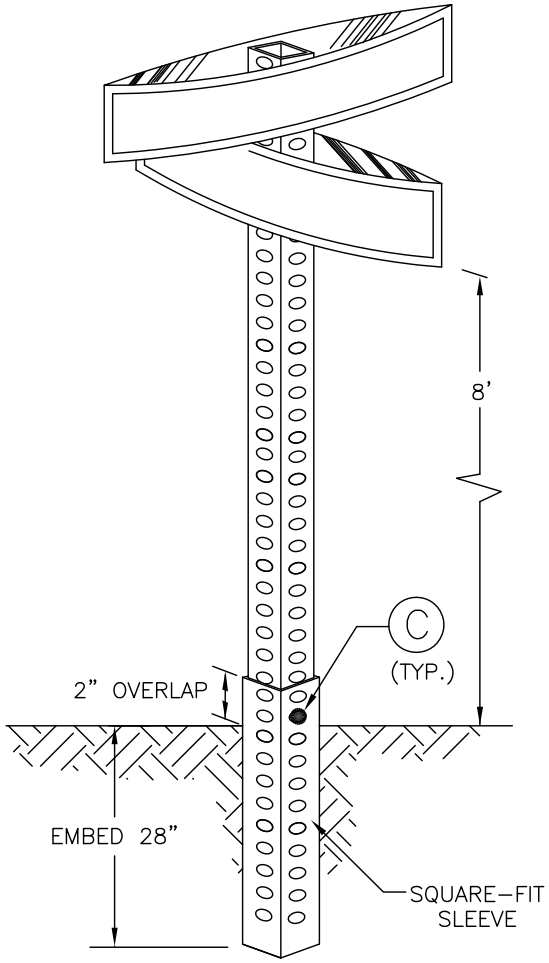

KEY TO FASTENERS:

(A) #10–24 x $\frac{3}{4}$" HEX HEAD MACHINE, ZINC– DEAD END
#10–24 FLANGE NUT, ZINC– DEAD END

(B) $\frac{5}{16}$" #16 X 3" CARRIAGE BOLT, ZINC
$\frac{5}{16}$" #16 HEX NUT, STEEL

(C) $\frac{5}{16}$" #16 X 2–$\frac{3}{4}$" CORNER BOLT (BREAKAWAY), ZINC
$\frac{5}{16}$" #16 HEX NUT, STEEL

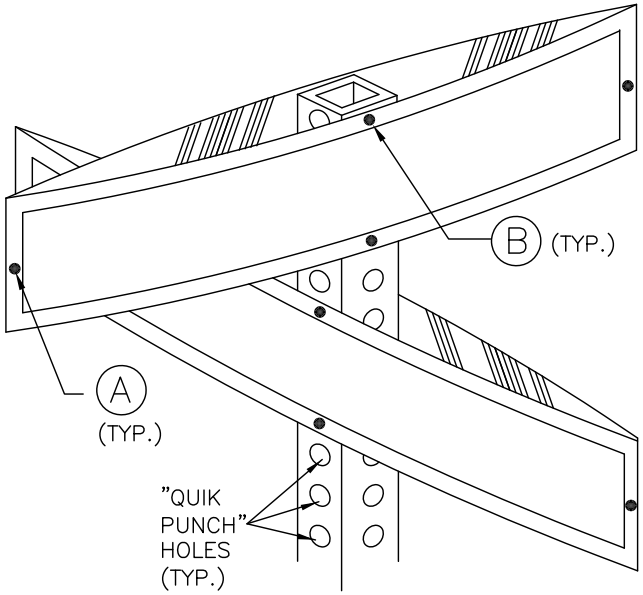

NOTES:

1. POST SHALL BE 14–GAUGE GALVANIZED STEEL, QUIK–PUNCH, $\frac{7}{16}$" HOLES, 1" ON CENTER, ALIGNED ON ALL SIDES, AND 2" SQUARE, 10 FEET IN LENGTH.
2. THE SLEEVE SHALL BE 12–GAUGE GALVANIZED STEEL, $\frac{7}{16}$" HOLES, 1" ON CENTER, ALIGNED ON ALL SIDES, AND 2.25" SQUARE, 30" IN LENGTH.
3. ALL STREET NAME SIGNS ARE SUBJECT TO THE APPROVAL OF THE TOWN MANAGER AND TOWN ENGINEER.

NOT TO SCALE

	TOWN OF WAXHAW LAND DEVELOPMENT STANDARDS	NON THOROUGHFARE STREET NAME SIGN	STD. NO. 702.1 / REV.

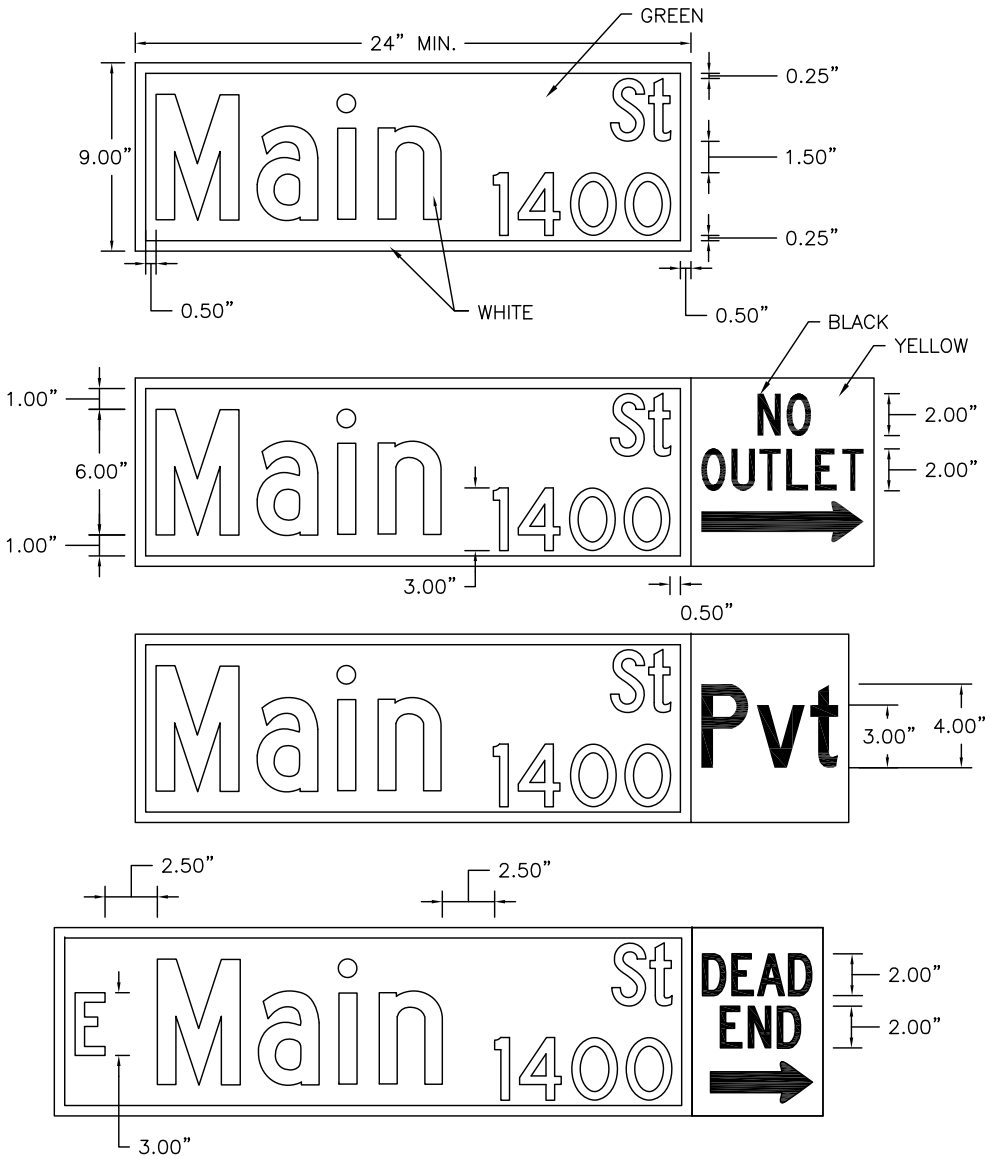

NOT TO SCALE

NOTES:

1. STREET NAME MARKERS (SNM) SHALL BE ALUMINUM, FLAT, AND HAVE DIMENSIONS AS SHOWN ON THIS DETAIL. MIMIMUM LENGTH OF 24"; MAXIMUM LENGTH OF 60". THE SNM'S SHALL BE COVERED WITH WHITE HIGH INTENSITY PRISMATIC (HIP) RETRO–REFLECTIVE SHEETING (3M SERIES 3930 OR EQUIVALENT) WITH PRESSURE SENSITIVE ADHESIVE (OR EQUIVALENT TYPE IV OR HIGHER).

2. THE LETTERS SHALL BE REVERSE CUT FROM TRANSPARENT GREEN OVERLAY FILM (3M #1177 EC FILM OR EQUIVALENT MEETING FEDERAL SPECIFICATION FP–96, SECTION 178.01(A) AND ASTM D4956). THE TRANSPARENT GREEN OVERLAY FILM MUST BE PLACED ON THE SNM TO PROVIDE AN EXPOSED 0.5" BORDER OF THE UNDERLAY WHITE HIP RETRO–REFLECTIVE SHEETING.

3. THE STREET NAME SHALL BE COMPOSED OF INITIAL UPPER CASE LETTERS 6" IN HEIGHT AND CORRESPONDING LOWER CASE LETTERS 4.5" IN HEIGHT, IN FHWA "HIGHWAY B" FONT. THE STREET NAME SHALL BE LEFT–JUSTIFIED AND PLACED 0.5" FROM THE SIGN BORDER. ANY STREET NAME WITH 3 OR FEWER LETTERS SHALL BE CENTERED IN THE SIGN TEXT AREA.

   - PREFIX/SUFFIX NAMES SHALL BE COMPOSED OF INITIAL UPPER CASE LETTERS 3" IN HEIGHT AND CORRESPONDING LOWER CASE LETTERS 2.25" IN HEIGHT, IN FHWA "HIGHWAY C" FONT.
   - BLOCK NUMBERS SHALL BE 3" IN HEIGHT, IN FHWA "HIGHWAY C" FONT.
   - SUFFIX NAMES AND BLOCK NUMBERS SHALL BE RIGHT–JUSTIFIED AND PLACED 0.5" FROM THE RIGHT–SIDE SIGN BORDER AND 0.25" FROM THE TOP AND BOTTOM SIGN BORDERS. PREFIX LETTERS (N, S, E, AND W) SHALL BE CENTERED AND PLACED 0.5" FROM THE LEFT–SIDE SIGN BORDER WITH 2.5" SPACING TO BEGINNING OF STREET NAME.

4. SUPPLEMENTAL SNM WORDING ON YELLOW HIP RETRO–REFLECTIVE SHEETING WITH BLACK VINYL LETTERS SHALL BE PLACED ADJACENT TO THE GREEN OVERLAY FILM/BORDER TO INDICATE STREETS THAT DEAD END, HAVE NO OUTLET, ETC. OR ARE PRIVATE STREETS (PVT). THE YELLOW HIP RETRO–REFLECTIVE SHEETING MUST BE PLACED ON THE SNM TO MAINTAIN AN EXPOSED 0.5" BORDER OF THE UNDERLAY WHITE HIP RETRO–REFLECTIVE SHEETING.

   - NO OUTLET WITH ARROW (RIGHT OR LEFT) – PLACED ON SNM AT ENTRANCE TO A STREET OR STREET NETWORK FROM WHICH THERE IS NO OTHER EXIT. USE UPPER CASE LETTERS 2" IN HEIGHT, IN FHWA "HIGHWAY C" FONT.
   - PVT – PLACED ON SNM AT ENTRANCE TO PRIVATE STREET, USE UPPER CASE LETTER 4" IN HEIGHT AND CORRESPONDING LOWER CASE LETTERS 3" IN HEIGHT, IN FHWA "HIGHWAY C" FONT.
   - DEAD END WITH ARROW (RIGHT OR LEFT) – PLACED ON SNM AT ENTRANCE TO A SINGLE STREET THAT TERMINATES IN A DEAD END OR CUL–DE–SAC. USE UPPER CASE LETTERS 2" IN HEIGHT, IN FHWA "HIGHWAY C" FONT. IF STUB STREET IS LESS THAN OR EQUAL TO 200 FEET, THEN DEAD END IS NOT NECESSARY.

5. ALL SNMs ARE SUBJECT TO THE APPROVAL OF THE TOWN ENGINEER.

	TOWN OF WAXHAW LAND DEVELOPMENT STANDARDS	THOROUGHFARE STREET NAME SIGN	STD. NO. 703.1 / REV.

INTERSECTION WITH SIDEWALK, CURB, AND GUTTER

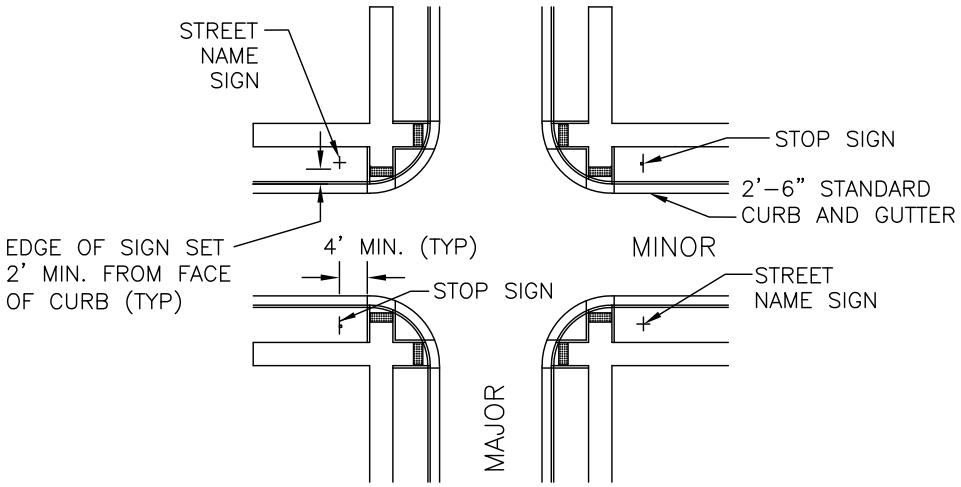

INTERSECTION WITH CURB AND GUTTER

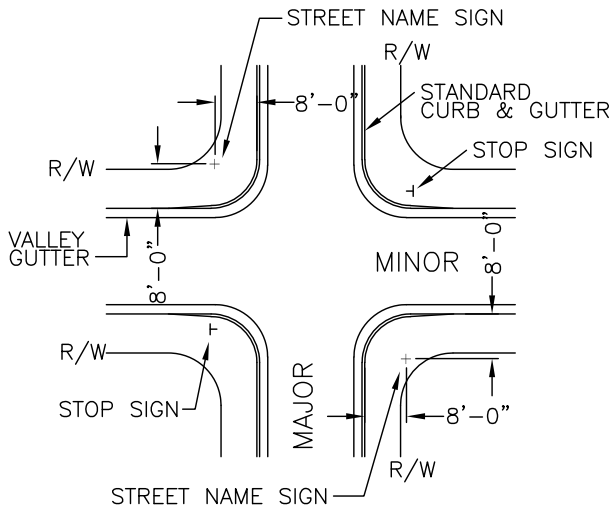

INTERSECTION WITH DITCHES, AND NO CURB AND GUTTER

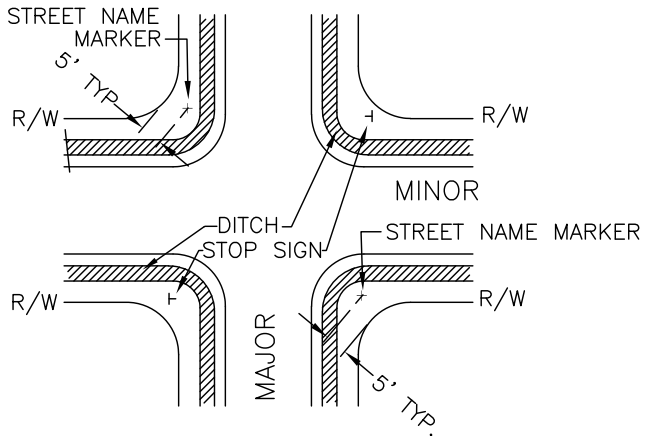

NOTES

1. TWO STREET NAME MARKERS ARE REQUIRED IF THE MAJOR STREET HAS 3 OR MORE LANES.
2. ANY VARIANCE FROM THIS STANDARD MUST BE APPROVED BY THE TOWN ENGINEER.
3. ENSURE STOP SIGN SIZE AND INSTALLATION PER MUTCD STANDARDS.

NOT TO SCALE

TOWN OF WAXHAW
LAND DEVELOPMENT STANDARDS

STREET SIGN INSTALLATION LOCATIONS

STD. NO.	REV.
704.1	

NOTES:

1. WHEN A DEAD–END OR STUBBED STREET REQUIRES A GUARDRAIL SECTION, END–OF–ROADWAY MARKER SIGNS (OM4–3, 24"x24", SOLID RED) SHALL BE PROVIDED.

2. SIGNS ARE TO BE PLACED BEHIND THE BARRICADE (SEE DETAILS 706.1), EVENLY SPACED WITH ONE SIGN PLACED AT THE CENTERLINE LOCATION AND ADDITIONAL SIGNS AT 6' O.C. (MINIMUM OF 3 SIGNS, MAXIMUM OF 5 SIGNS).

3. WHEN BARRICADE IS USED ON A STREET STUB, THE SIGN AT THE CENTERLINE SHALL BE SUPPLEMENTED WITH A STREET CONNECTIVITY SIGN. SEE DETAIL 708.1

4. ALL SIGNS/MARKERS SHALL MEET OR EXCEED MUTCD STANDARDS FOR RETROREFLECTIVITY.

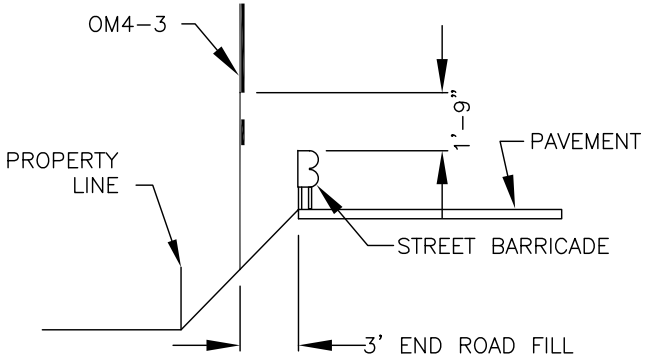

SIGN LOCATION DETAIL

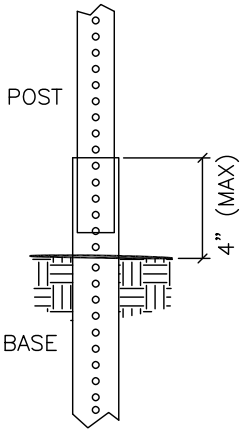

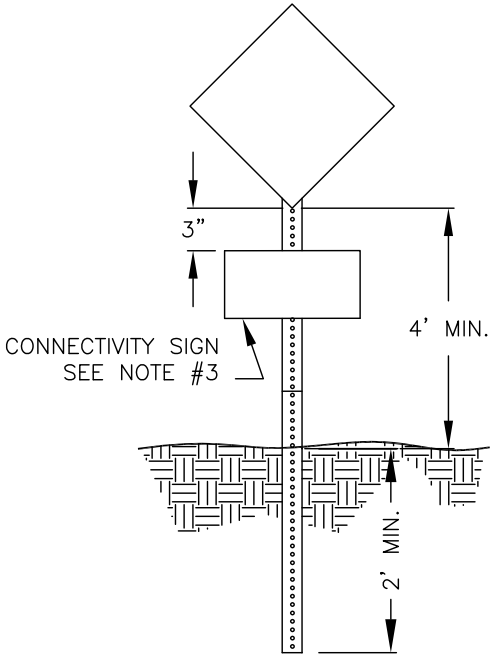

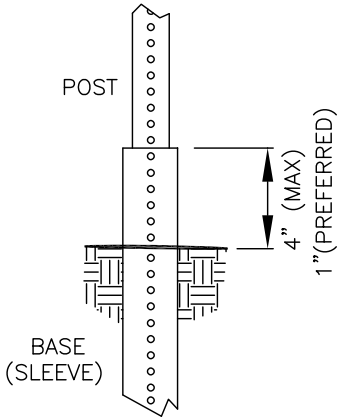

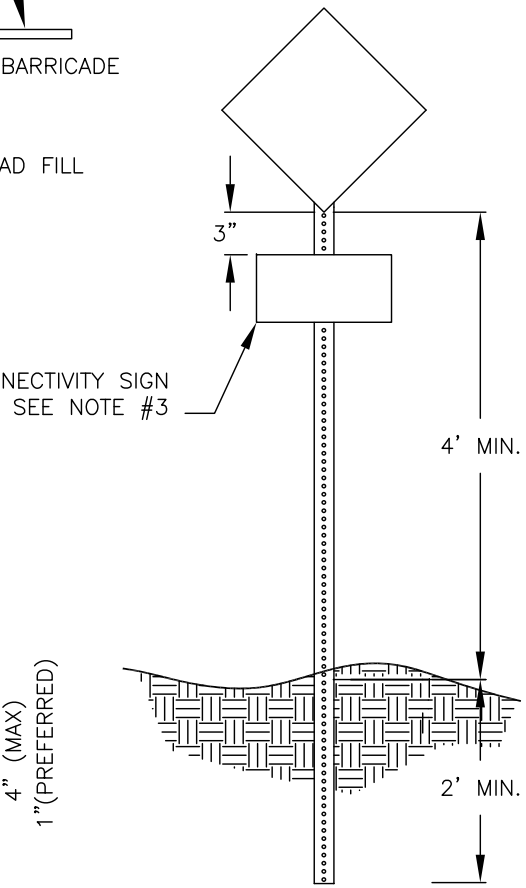

NOT TO SCALE

	TOWN OF WAXHAW LAND DEVELOPMENT STANDARDS	END OF ROADWAY MARKER

STD. NO.	REV.
705.1	

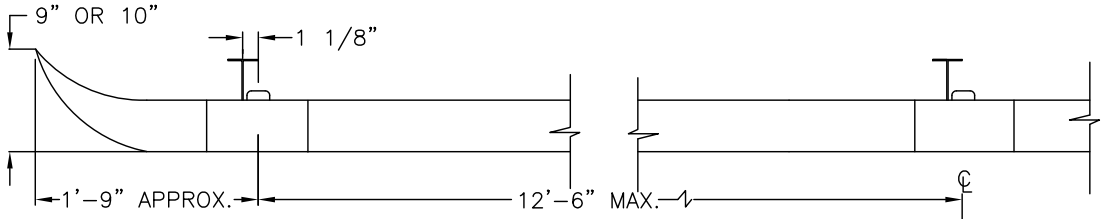

PLAN

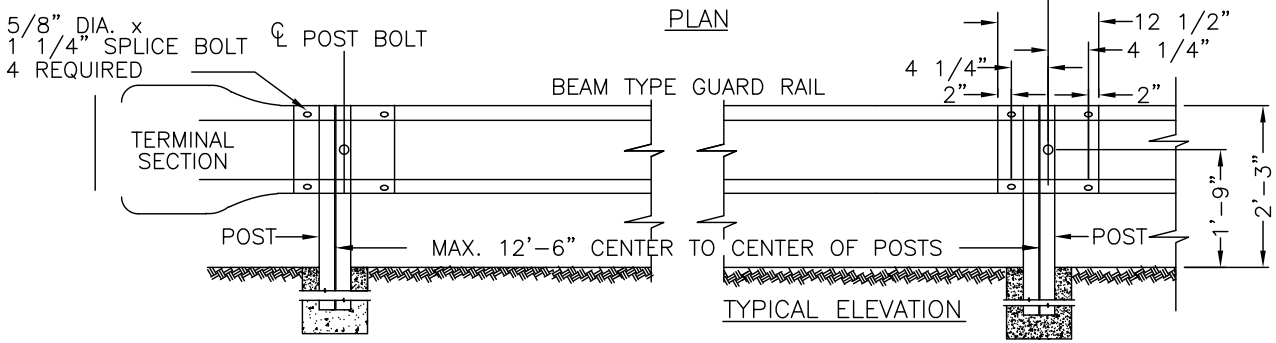

TYPICAL ELEVATION

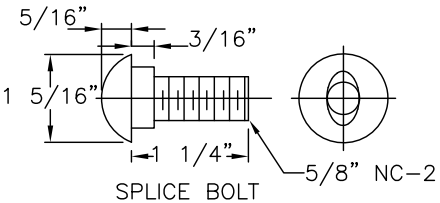

SPLICE BOLT
2" FOR POST BOLT

DETAIL OF BOLT

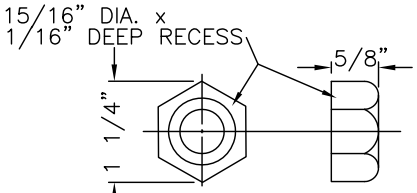

DETAIL OF NUT

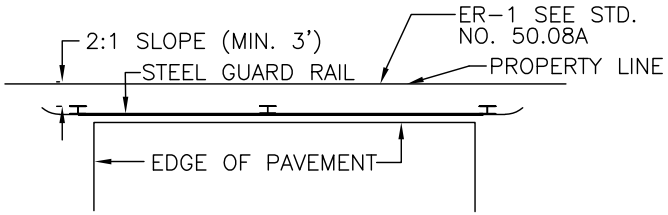

DEAD-END STREET BARRICADE

NOTE

THIS DETAIL IS NOT A GUARDRAIL DETAIL. FOR ROADSIDE GUARDRAIL, SEE NCDOT STANDARD DRAWINGS 862.01-862.03

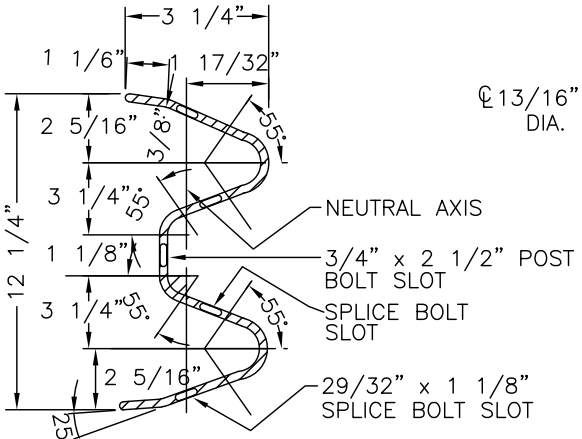

SECTION THRU RAIL ELEMENT

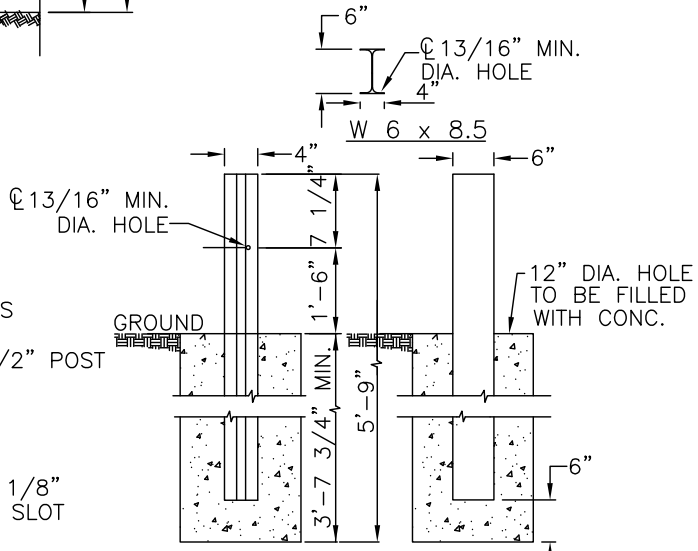

DETAIL OF POST

APPROVED DATE

NOT TO SCALE

	TOWN OF WAXHAW LAND DEVELOPMENT STANDARDS	DEAD END STREET BARRICADE

STD. NO.	REV.
706.1	

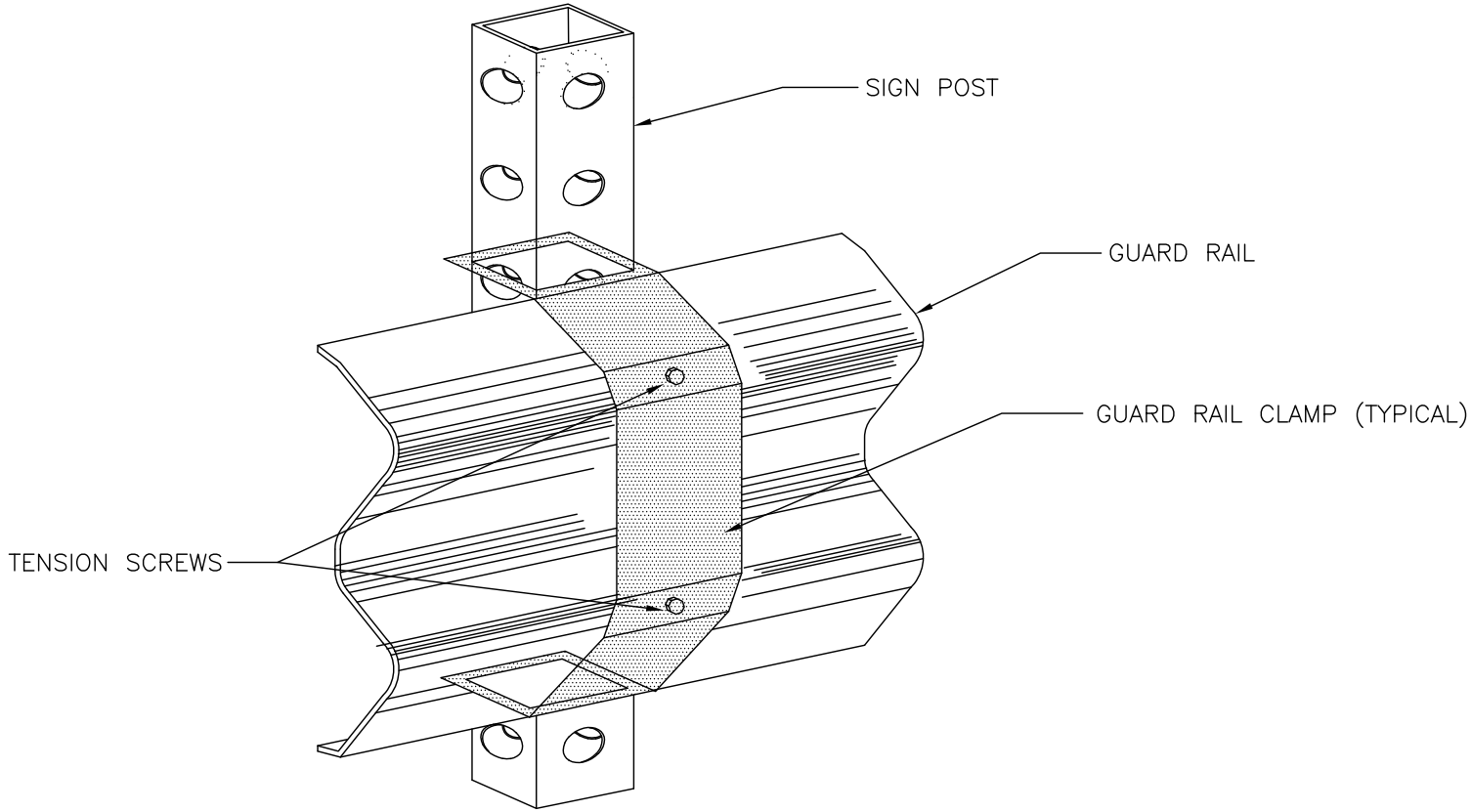

NOT TO SCALE

	TOWN OF WAXHAW LAND DEVELOPMENT STANDARDS	END OF ROADWAY MARKER GUARD RAIL CLAMP INSTALLATION	STD. NO. 707.1 / REV.

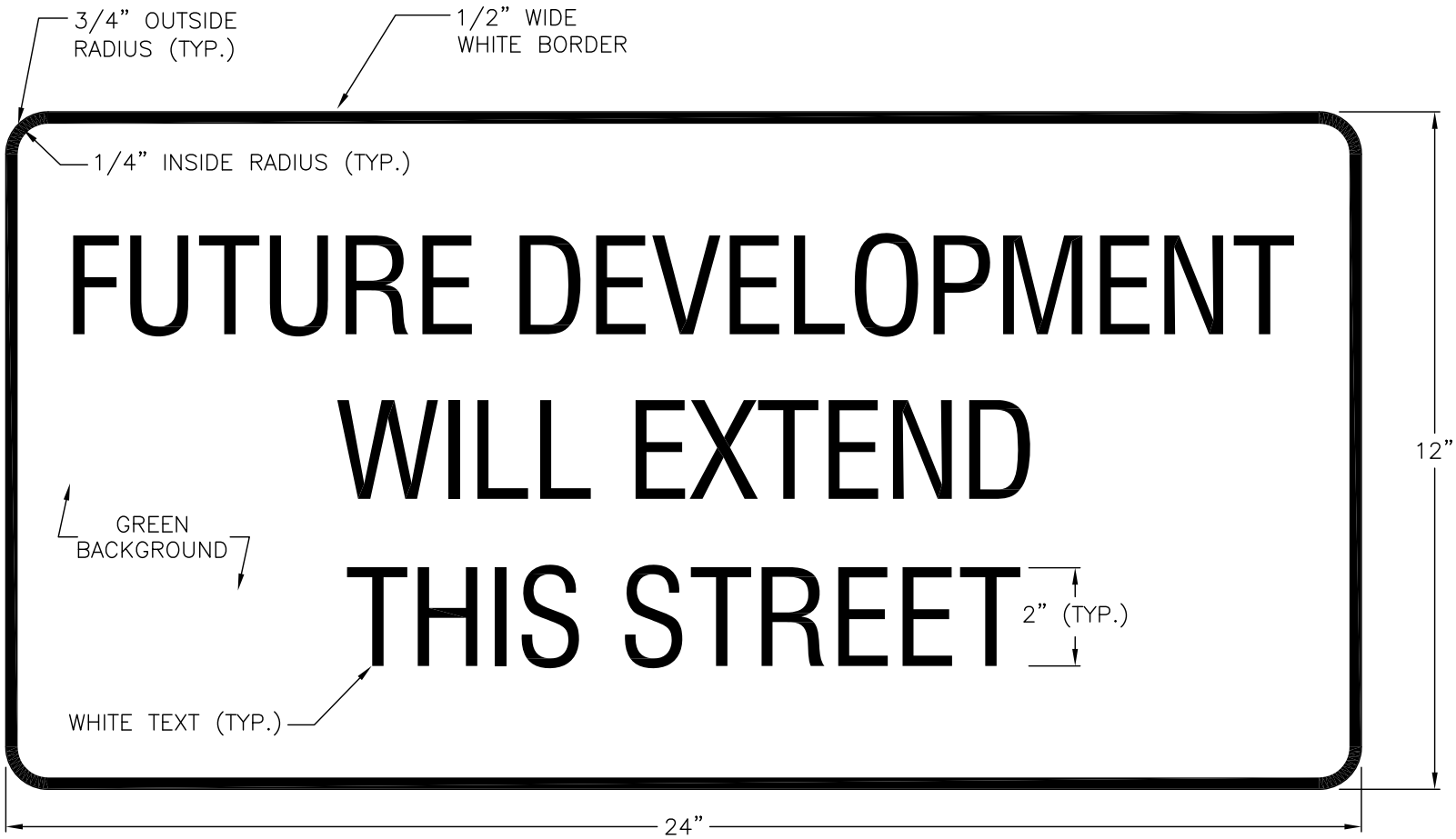

NOTES:

1. SIGN SHALL MEET OR EXCEED MUTCD STANDARDS FOR RETROREFLECTIVITY
2. SIGN MATERIAL SHALL BE 0.080" THICK ALUMINUM
3. ALL LETTERS SHALL BE SERIES B–2000 FROM THE 2004 STANDARD HIGHWAY SIGNS MANUAL (AND ANY REVISION THERETO) PUBLISHED BY THE FEDERAL HIGHWAY ADMINISTRATION.

NOT TO SCALE

	TOWN OF WAXHAW LAND DEVELOPMENT STANDARDS	STREET CONNECTIVITY SIGN FOR END–OF–ROAD BARRICADE	STD. NO. 708.1 / REV.

GENERAL NOTES:

1. STEEL BEAM TYPE GUARD RAILS SHALL BE INSTALLED AT THE END OF ALL DEAD–END STREETS, EXCEPT CUL–DE–SAC STREETS WHICH HAVE BEEN IMPROVED WITH A PERMANENT TURN–AROUND.
2. FOR STREETS 26' IN WIDTH THE GUARD RAIL SHALL CONSIST OF TWO(2) 12'–6" SECTIONS OR ONE(1) 25' SECTION, THREE (3) STEEL POSTS, AND TWO (2) TERMINAL SECTIONS. FOR STREETS GREATER THAN 25' IN WIDTH THE GUARD RAIL SHALL SPAN THE ENTIRE WIDTH OF THE STREET.
3. GUARD RAIL SHALL CONSIST OF RAIL ELEMENTS FABRICATED TO DEVELOP CONTINUOUS BEAM STRENGTH AND INSTALLED AS SHOWN.
4. MINIMUM THICKNESS OF GUARD RAIL SHALL BE 12 GAGE U.S. STANDARD.
   THE RAIL ELEMENT INCLUDING SPLICES, SHALL HAVE A MINIMUM ULTIMATE TENSILE STRENGTH OF 80,000 LBS.
   GUARD RAIL PARTS FURNISHED SHALL BE INTERCHANGEABLE WITH SIMILAR PARTS REGARDLESS OF THE SOURCE OF MANUFACTURER.
   THE HOLES FOR CONNECTING BOLTS SHALL BE PUNCHED OR DRILLED, BURNING WILL NOT BE PERMITTED.
5. THE GUARD, BOLTS, NUTS, STEEL POSTS. AND ALL OTHER METAL PARTS SHALL BE GALVANIZED TO CONFORM TO THE REQUIREMENTS FOR THE COATING CLASS, (2.50 OUNCES PER SQUARE FOOT) OF THE CURRENT SPECIFICATIONS FOR ZINC–COATED (GALVANIZED) IRON, AND STEEL SHEETS, COILS, AND CUT LENGTHS, IN ACCORDANCE WITH ASTM 123A.
6. IF THE AVERAGE SPELTER COATING AS DETERMINED FROM THE REQUIRED SAMPLES IS LESS THAN TWO (2) OUNCES OF SPELTER PER SQUARE FOOT, OR IF ANY ONE SPECIMEN HAS LESS THAN 1.8 ONCES OF SPELTER PER SQUARE FOOT OF DOUBLE EXPOSED SURFACE, THE LOT SAMPLED SHALL BE REJECTED, THE FINISHED SHEETS SHALL BE OF FIRST CLASS COMMERCIAL QUALITY, FREE FROM INJURIOUS DEFECTS, SUCH AS BLISTERS, FLUX, AND UNCOATED SPOTS.
7. THE GUARD RAIL SHALL BE INSPECTED TO DETERMINE THAT THE MATERIAL, DIMENSIONS, AND WORKMANSHIP ARE IN ACCORDANCE WITH THIS PLAN.
8. WHERE A DEAD–END STREET REQUIRES GUARD RAIL, END OF ROADWAY MARKER SIGNS SHALL ALSO BE REQUIRED. (SEE STD.707.1 & 708.1)

NOT TO SCALE

	TOWN OF WAXHAW LAND DEVELOPMENT STANDARDS	END OF ROADWAY STREET BARRICADE GENERAL NOTES	STD. NO. 709.1 / REV.

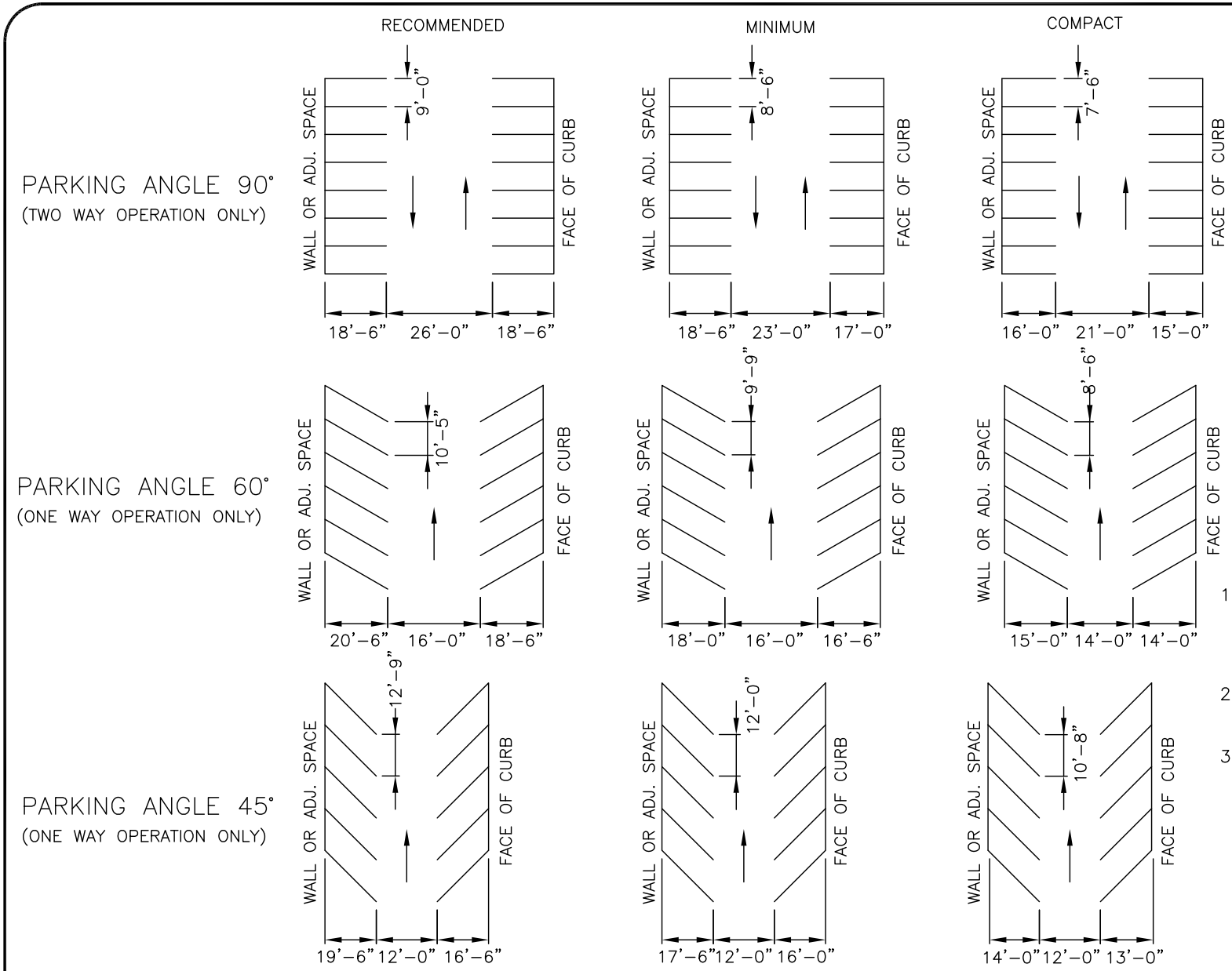

NOTES:

1. FOR ACCESSIBLE PARKING STANDARDS/SIGNAGE SEE STDS. 712.1, 713.1, AND 714.1.
2. PAVEMENT MARKINGS SHALL BE 4" WHITE PAINT.
3. ALTERNATIVE PARKING ANGLES, AISLE WIDTHS, AND OPERATION (TWO-WAY ANGLED PARKING OR REVERSE-ANGLE PARKING) WILL BE CONSIDERED BY TOWN ON A CASE-BY-CASE BASIS.

NOT TO SCALE

TOWN OF WAXHAW
LAND DEVELOPMENT STANDARDS

PARKING STANDARDS

STD. NO.	REV.
710.1	

SIDEWALK ADJACENT TO HEAD–IN OR BACK–IN PARKING SHALL BE AT LEAST 7 FEET WIDE.

PARKING ON ONE SIDE OF A SIDEWALK

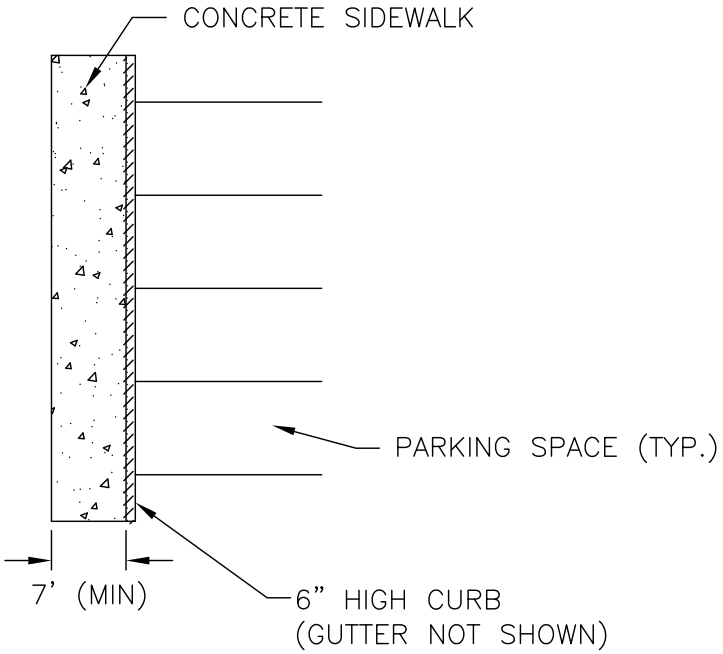

SIDEWALK BETWEEN TWO ROWS OF HEAD–IN OR BACK–IN PARKING SHALL BE AT LEAST 9 FEET WIDE.

PARKING ON BOTH SIDES OF A SIDEWALK

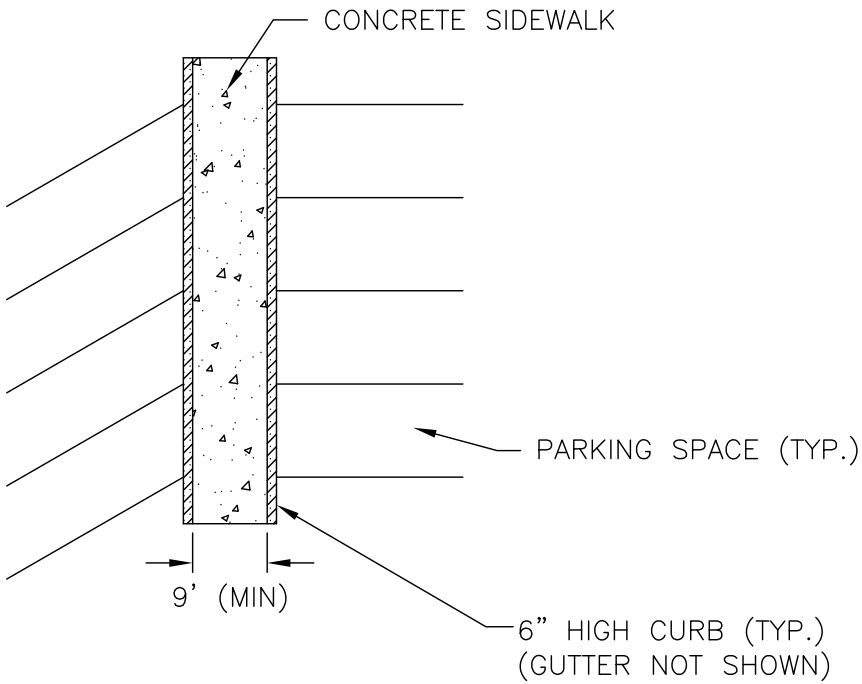

NOTES:

1. A 2–FOOT–WIDE PLANTING STRIP LOCATED AT THE BACK OF CURB CAN BE USED IN LIEU OF 2 FEET OF SIDEWALK WIDTH.
2. PARKING AT ANY ANGLE OTHER THAN PARALLEL SHALL BE SUBJECT TO THIS STANDARD.
3. IF MONOLITHIC CURB & SIDEWALK IS USED, ADD 6" TO ALL DIMENSIONS (1' IF PARKING ON BOTH SIDES).
4. WHEELSTOPS SHALL ONLY BE USED IN LIEU OF 2 FEET OF SIDEWALK WITH THE APPROVAL OF THE TOWN AND WHEN EXISTING CONDITIONS PREVENT CONSTRUCTION OF A 7–FOOT/9–FOOT SIDEWALK. WHEELSTOPS SHALL BE 6" HIGH, MADE OUT OF 3600–PSI REINFORCED CONCRETE, AND ANCHORED WITH #5 OR GREATER REBAR (2' MINIMUM LENGTH). REBAR HOLES SHALL BE GROUTED UPON INSTALLATION. WHEELSTOPS SHALL BE PLACED AT 2 FEET FROM THE EDGE OF SIDEWALK OR OBSTRUCTION.

NOT TO SCALE

	TOWN OF WAXHAW LAND DEVELOPMENT STANDARDS	PARKING STANDARDS (CONTINUED)	STD. NO. 711.1 / REV.

ACCESSIBLE PARKING REQUIREMENTS

TOTAL PARKING SPACES PROVIDED	MINIMUM NUMBER OF ACCESSIBLE SPACES SPACES REQUIRED	MINIMUM NUMBER OF ACCESSIBLE SPACES REQUIRED TO BE VAN ACCESSIBLE
1 TO 25	1	1
26 TO 50	2	1
51 TO 75	3	1
76 TO 100	4	1
101 TO 150	5	1
151 TO 200	6	1
201 TO 300	7	2
301 TO 400	8	2
401 TO 500	9	2
501 TO 1000	2% OF TOTAL	1 IN EVERY 6 ACCESSIBLE SPACES
1001 AND OVER	20 PLUS 1 FOR EACH 100 OVER 1000	1 IN EVERY 6 ACCESSIBLE SPACES
REFERENCE: SECTION 1106 OF NC BUILDING CODE		

PARKING SPACE PAVEMENT MARKINGS

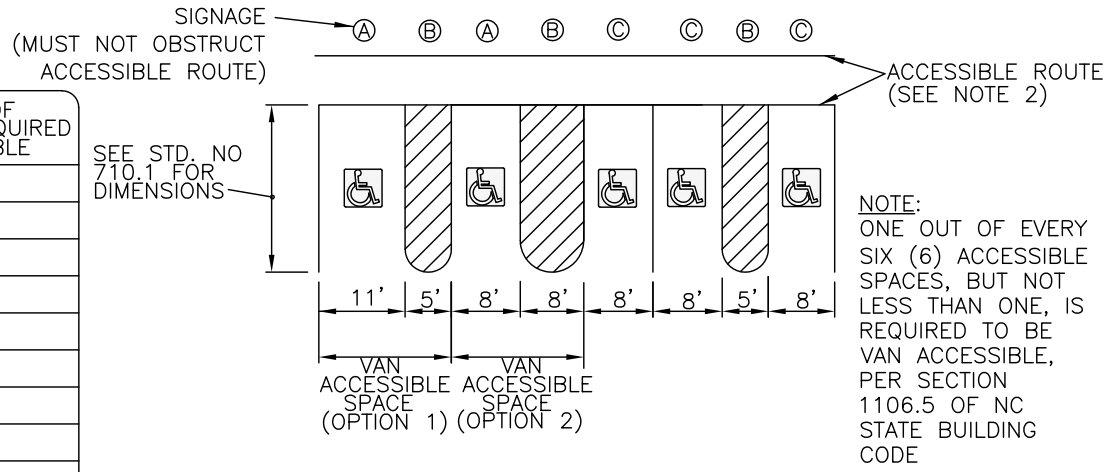

NOTE:
ONE OUT OF EVERY SIX (6) ACCESSIBLE SPACES, BUT NOT LESS THAN ONE, IS REQUIRED TO BE VAN ACCESSIBLE, PER SECTION 1106.5 OF NC STATE BUILDING CODE

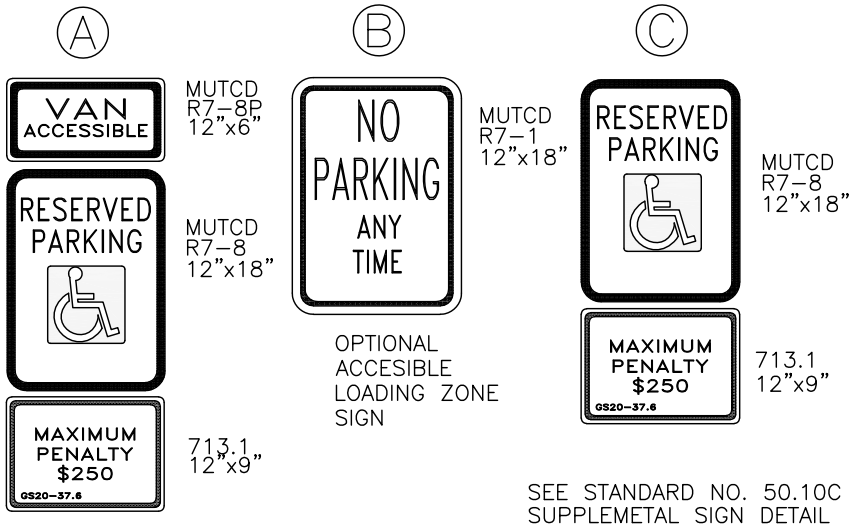

SEE STANDARD NO. 50.10C FOR SUPPLEMETAL SIGN DETAIL

NOTES:

1. ALL 12"x18" ACCESSIBLE SIGNS (R7-8 & R7-1) SHALL BE MOUNTED AT 7 FEET FROM GRADE TO BOTTOM EDGE OF SIGN FACE (MUTCD). MOUNTING HEIGHT CAN BE REDUCED TO 5 FEET IF PLACED IN AN AREA BETWEEN SIDEWALK AND BUILDING FACE IN WHICH PEDESTRIANS ARE NOT EXPECTED TO USE.
2. IF ACCESSIBLE ROUTE IS A RAISED SIDEWALK AREA, THEN RAMPS ARE REQUIRED AT LOADING ZONE AREA. MAINTAIN MIN. 4' WIDE CONTINUOUS PASSAGE.
3. VERTICAL CLEARANCE FOR VANS MUST BE GREATER THAN 98-INCHES.
4. THIS DETAIL IS TO PROVIDE GENERAL GUIDANCE FOR PARKING LAYOUT AND DESIGN; REFER TO MANUAL ON UNIFORM TRAFFIC CONTROL DEVICES (MUTCD) U.S. DEPARTMENT OF TRANSPORTATION AND NORTH CAROLINA DEPARTMENT OF TRANSPORTATION SUPPLEMENT AND NC BUILDING CODE FOR ADDITIONAL INFORMATION.

NOT TO SCALE

TOWN OF WAXHAW
LAND DEVELOPMENT STANDARDS

ACCESSIBLE PARKING AND SIGNAGE STANDARDS

STD. NO.	REV.
712.1	

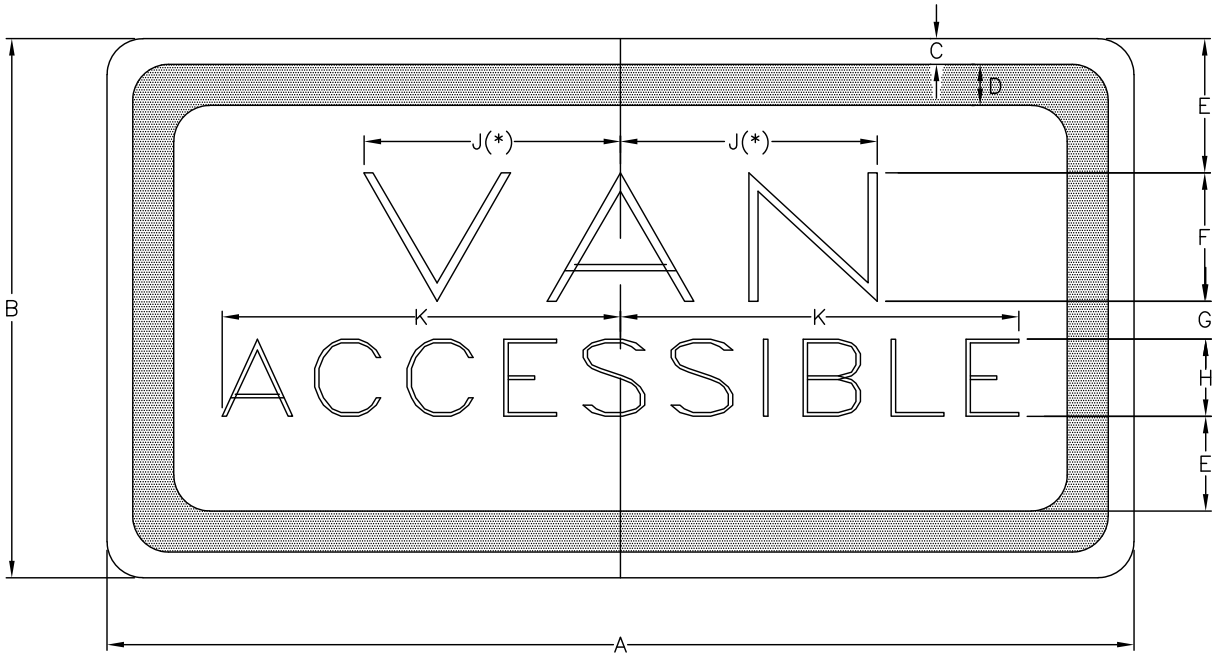

R7–8P

DIMENSIONS (INCHES)										
A	B	C	D	E	F	G	H	J	K	L
12	6	3/8	3/8	1–1/2	1–1/2D	1/2	1D	2–1/2	4	1–1/2

*INCREASE SPACING 50%
D–FHWA (FEDERAL HIGHWAY ADMINISTRATION/USDOT)
SERIES D LETTERS

LEGEND AND BORDER – GREEN
BACKGROUND – WHITE

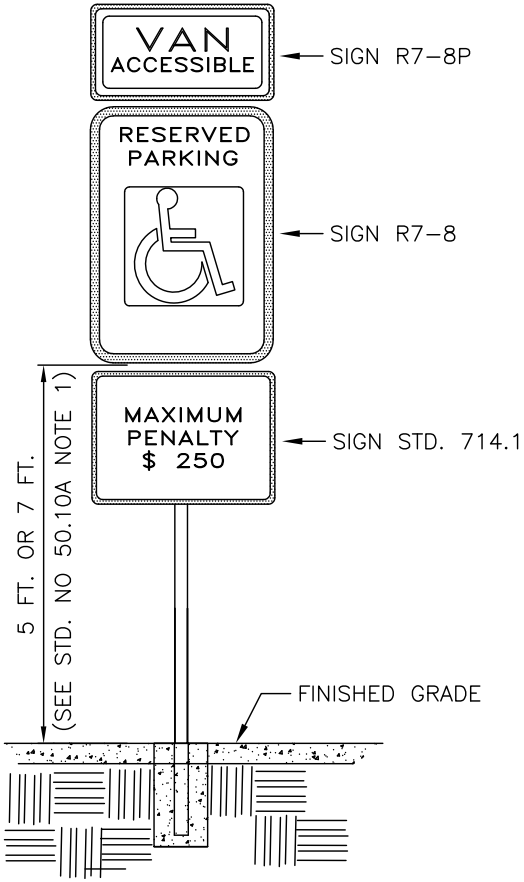

NOT TO SCALE

	TOWN OF WAXHAW LAND DEVELOPMENT STANDARDS	SUPPLEMENTAL VAN ACCESSIBLE SIGN (R7–8P)	STD. NO. 713.1 / REV.

NOTE:

SUPPLEMENTAL VAN ACCESSIBLE SIGN (R7-8P) USED IF THERE IS ONLY ONE REQUIRED ACCESSIBLE PARKING SPACE (MUST BE VAN ACCESSIBLE) AND AT EACH ADDITIONAL REQUIRED VAN ACCESSIBLE SPACE. (SEE STD. NO. 713.1)

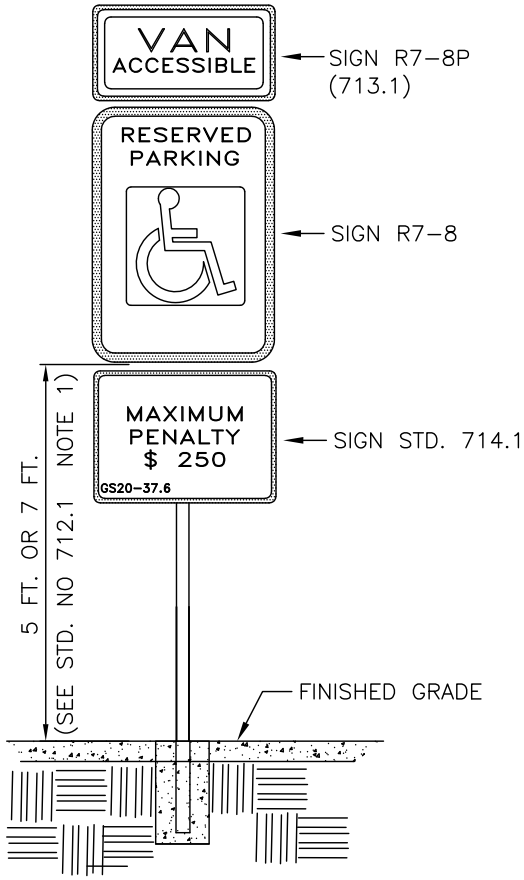

LEGEND AND BORDER – GREEN
BACKGROUND – WHITE

SIGN APPROVED FOR USE UNDER GENERAL STATUTE 20-37.6

THIS PENALTY SIGN IS REQUIRED TO ACCOMPANY ALL R7-8 PARKING SIGNS ERECTED AFTER DECEMBER 31,1990

NOT TO SCALE

	TOWN OF WAXHAW LAND DEVELOPMENT STANDARDS	SUPPLEMENTAL ACCESSIBLE PENALTY SIGN	STD. NO. 714.1 / REV.

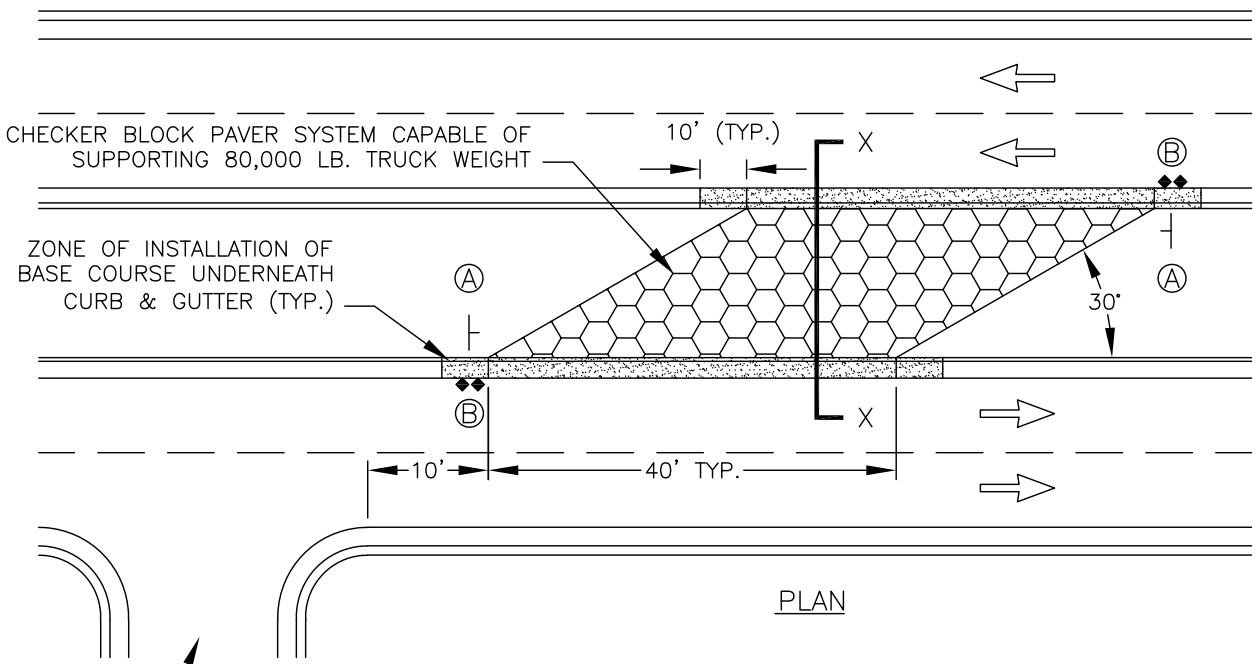

PLAN

Ⓐ "NO LEFT TURN" (R3–2, 24"x24")

Ⓑ YELLOW/YELLOW RAISED PVMT. MARKER 1' O.C. SEE NCDOT STD. #1250.01.

NOTES:

1. CROSSOVER TO BE OFFSET 10' FROM ANY INTERSECTING STREET OR DRIVEWAY OTHER THAN A FIRE DEPARTMENT DRIVEWAY.
2. ASPHALT BASE COURSE UNDERNEATH MOUNTABLE CURB AND GUTTER SHALL EXTEND AT LEAST 10 FEET BEYOND CROSSOVER.
3. ONLY FOR USE AT RIGHT–IN/RIGHT–OUT (RI/RO) ENTRANCES TO RESIDENTIAL SUBDIVISIONS AND COMMERCIAL DEVELOPMENTS WITH PRIOR APPROVAL FROM TOWN ENGINEER.
4. INCLUDE SUBDRAIN AS NECESSARY PER 312.1.

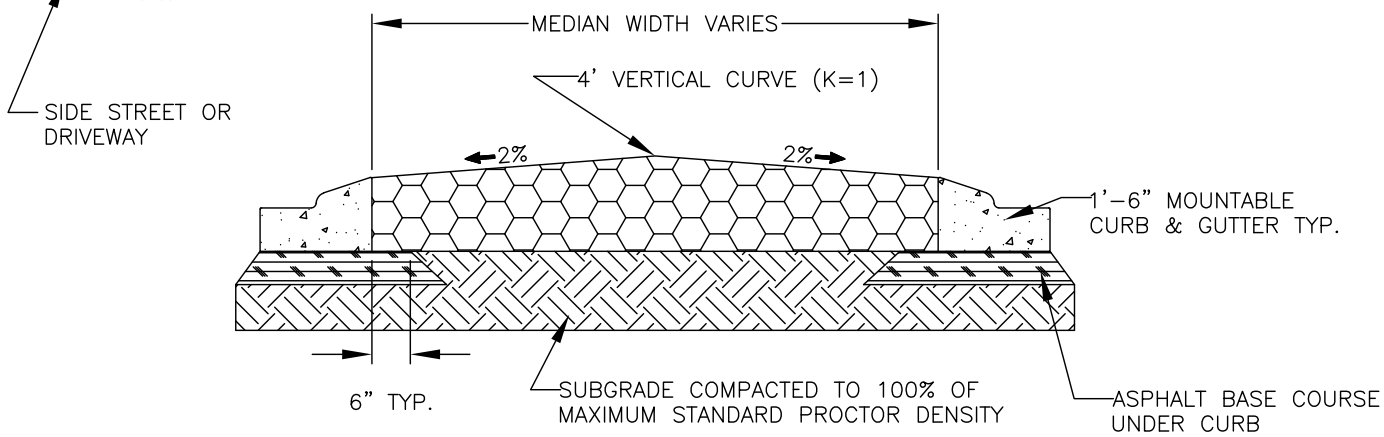

CROSS–SECTION X–X

NOT TO SCALE

TOWN OF WAXHAW LAND DEVELOPMENT STANDARDS	EMERGENCY VEHICLE MEDIAN CROSSOVER	STD. NO. 715.1 REV.

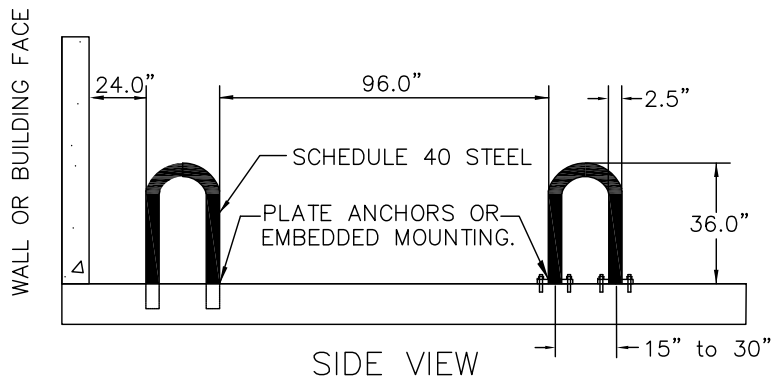

SIDE VIEW

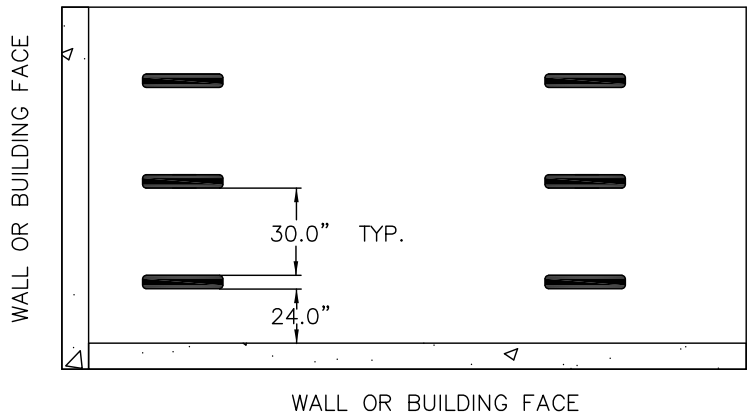

PLAN VIEW

NOTES:

1. BIKE RACKS SHOULD BE INSTALLED AS PER MANUFACTURER'S RECOMMENDED INSTALLATION PROCEDURES.
2. ALTERNATIVE BIKE RACKS OR LOCKERS MAY BE USED BUT ARE SUBJECT TO APPROVAL BY THE TOWN ENGINEER.
3. ALL DIMENSIONS SHOWN ARE MINIMUM.
4. PLACEMENT SHOULD BE CANE DETECTABLE AND PLACED OUTSIDE PEDESTRIAN ACCESS ROUTE.

NOT TO SCALE

	TOWN OF WAXHAW LAND DEVELOPMENT STANDARDS	INVERTED "U" RACK FOR BICYCLE PARKING	STD. NO. 716.1 / REV.

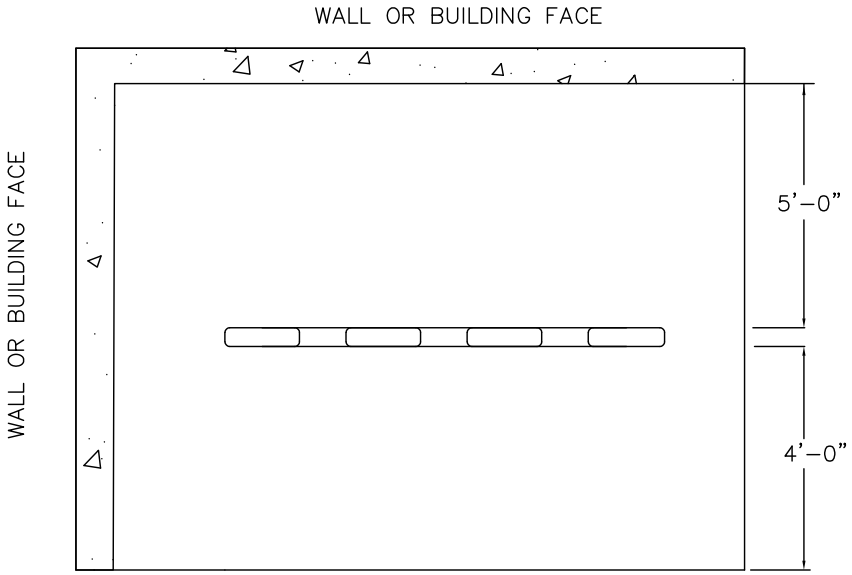

PLAN VIEW

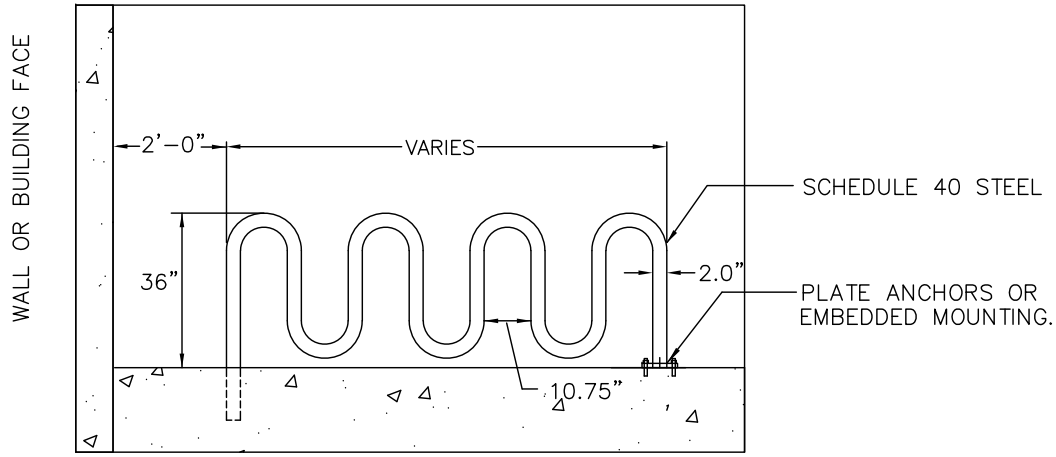

SIDE VIEW

NOTES:

1. BIKE RACKS SHOULD BE INSTALLED AS PER MANUFACTURER'S RECOMMENDED INSTALLATION PROCEDURES.
2. ALTERNATIVE BIKE RACKS OR LOCKERS MAY BE USED BUT ARE SUBJECT TO APPROVAL BY THE TOWN OF WAXHAW TOWN ENGINEER.
3. ALL DIMENSIONS SHOWN ARE MINIMUM.
4. PLACEMENT SHOULD BE CANE DETECTABLE AND PLACED OUTSIDE PEDESTRIAN ACCESS ROUTE.

NOT TO SCALE

TOWN OF WAXHAW LAND DEVELOPMENT STANDARDS	WAVE RACK FOR BICYCLE PARKING	STD. NO.	REV.
		717.1	8/19

NOTES:

1. BIKE LOCKERS SHOULD BE INSTALLED AS PER MANUFACTURER'S RECOMMENDED INSTALLATION PROCEDURES.
2. ALTERNATIVE BIKE RACKS OR LOCKERS MAY BE USED BUT ARE SUBJECT TO APPROVAL BY THE TOWN OF WAXHAW TOWN ENGINEER.
3. ALL DIMENSIONS SHOWN ARE MINIMUM.
4. ALLOW FOR POSITIVE DRAINAGE AWAY FROM LOCKERS.

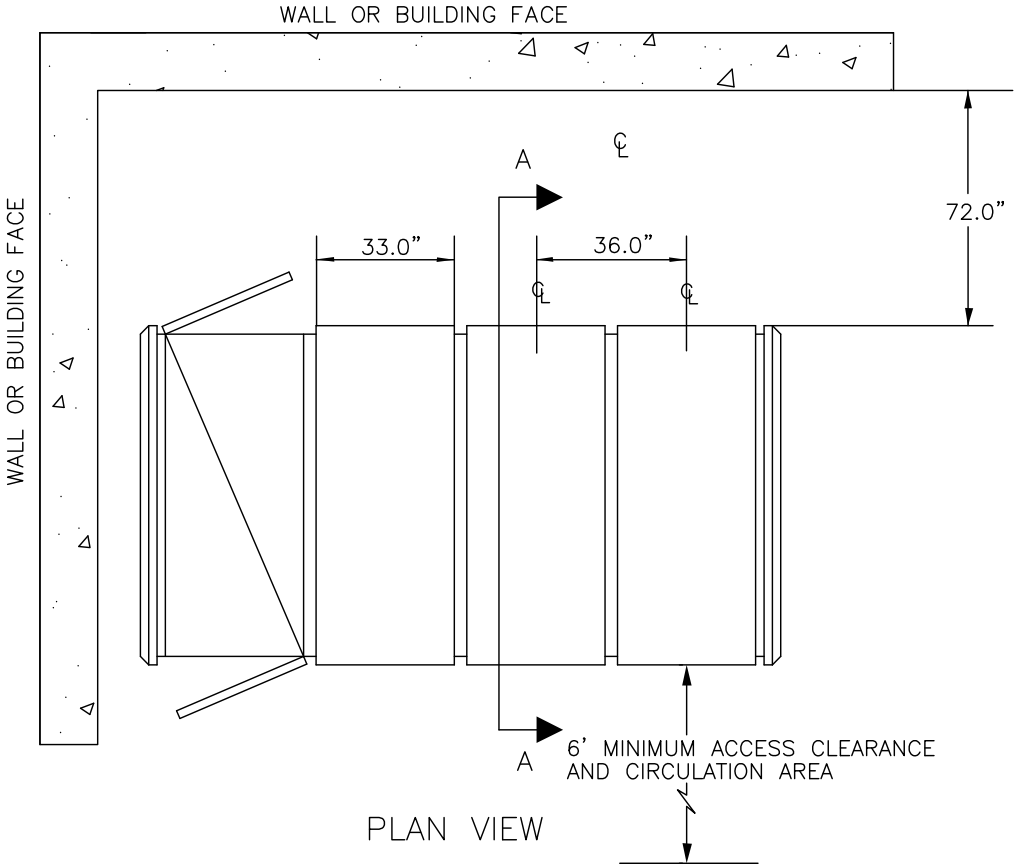

PLAN VIEW

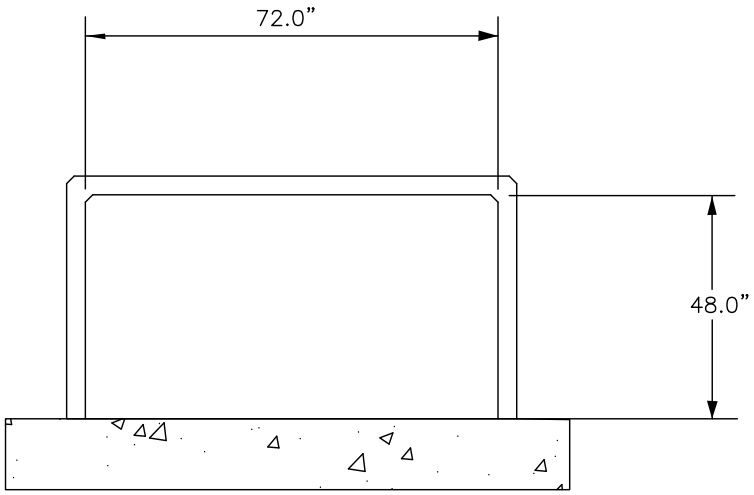

SECTION A–A

NOT TO SCALE

TOWN OF WAXHAW LAND DEVELOPMENT STANDARDS	BICYCLE LOCKERS	STD. NO. 718.1 / REV. 8/19

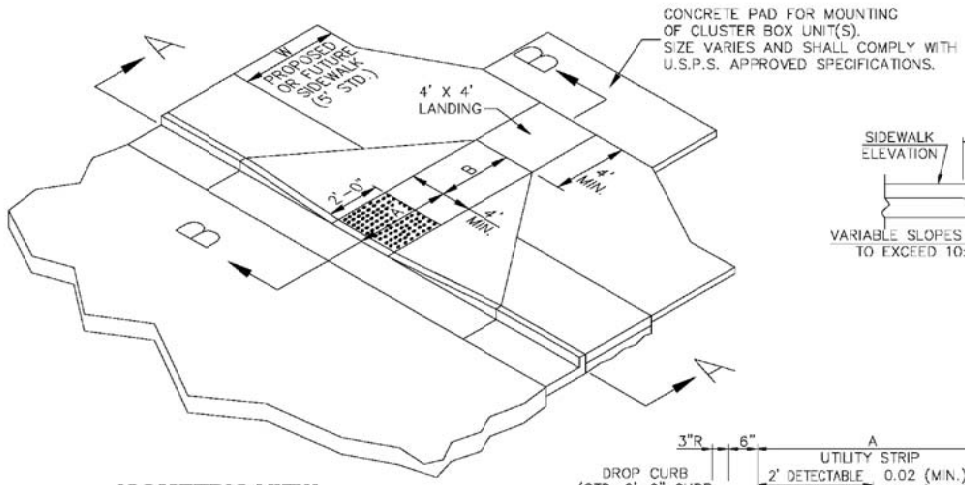

ISOMETRIC VIEW

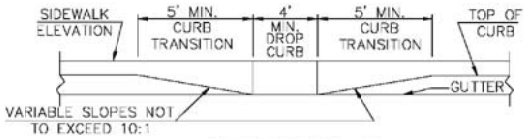

SECTION A - A

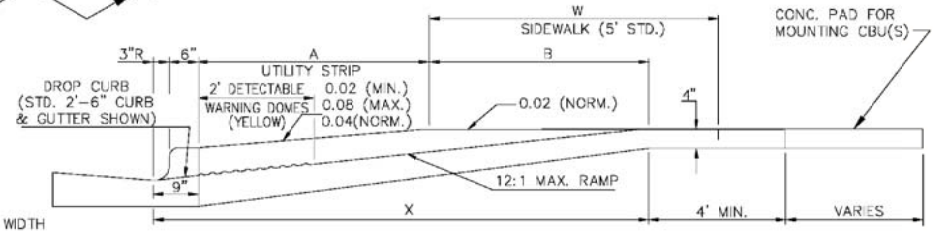

SECTION B - B

NOTE:

YELLOW DETECTABLE WARNING DOME TILE WILL COVER 2'-0" LENGTH AND FULL WIDTH OF THE RAMP FLOOR AS SHOWN ON THE DETAILS.

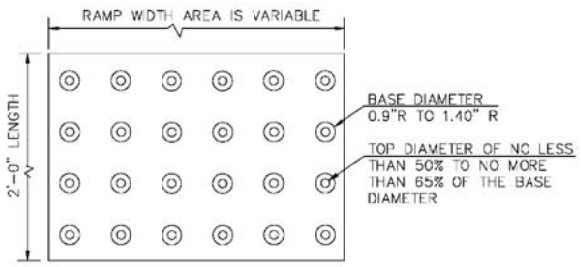

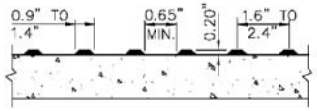

DETECTABLE WARNING DOMES

W	A	W+A+9"	X	B
5'	0.0'	5.8'	5.8'	5.0'*
6'	0.0'	6.8'	6.8'	6.0'**
7'	0.0'	7.8'	7.3'	6.5'**
8'	0.0'	8.8'	7.3'	6.5'**
5'	2.0'	7.8'	7.8'	5.0'
5'	2.5'	8.3'	8.1'	4.8'
5'	3.0'	8.8'	8.3'	4.4'
5'	3.5'	9.3'	8.4'	4.1'
5'	4.0'	9.8'	8.6'	3.8'
5'	4.5'	10.3'	8.7'	3.4'
5'	5.0'	10.8'	8.9'	3.1'

B = X-(A+9")

B = DISTANCE FROM FRONT EDGE OF SIDEWALK TO BACK POINT OF 12:1 (8.33%) SLOPE.

* BACK OF SIDEWALK DROP REQUIRED FOR ALL SIDEWALK SLOPES.

** BACK OF SIDEWALK DROP REQUIRED FOR SIDEWALK SLOPES 0.04.

CURB RAMP FOR CLUSTER BOX UNIT(S)

N.T.S.

NOT TO SCALE

TOWN OF WAXHAW
LAND DEVELOPMENT STANDARDS

CURB RAMP FOR CLUSTER BOX UNITS

STD. NO.	REV.
719.1	

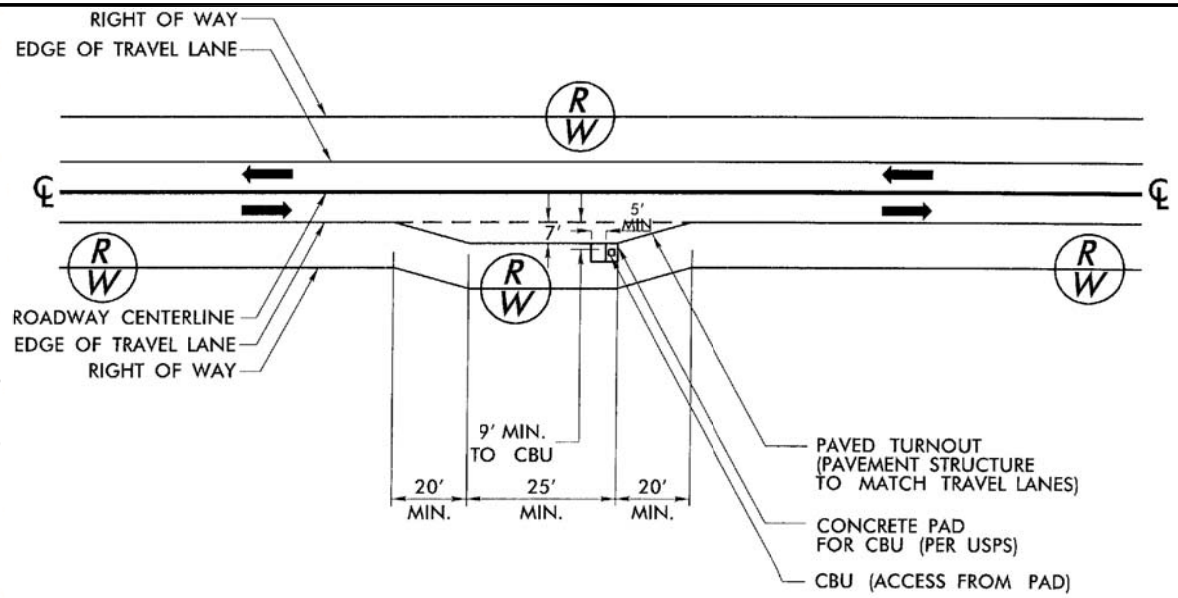

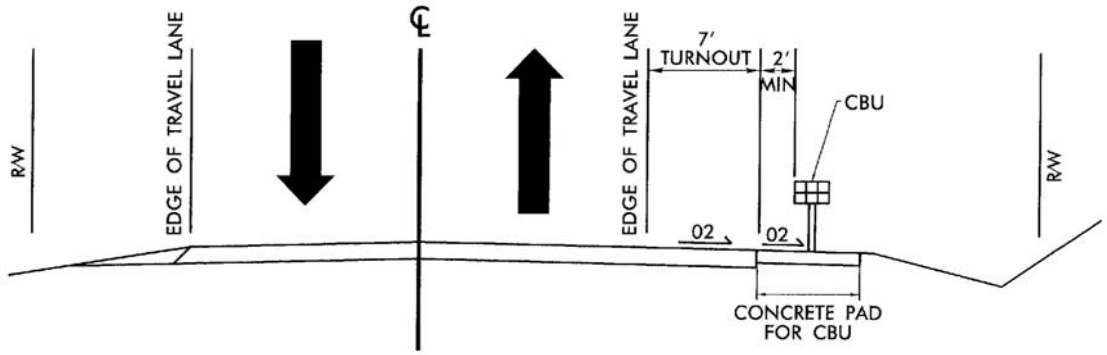

SEE FIGURE 1 PAGE 39, "NCDOT SUBDIVISION ROADS MINIMUM CONSTRUCTION STANDARDS JANUARY 2010" FOR LOCAL AND COLLECTOR ROAD DIMENSIONS.

NOTE:
MAINTAIN R/W OFFSET AROUND CBU TURNOUT

NOT TO SCALE

TOWN OF WAXHAW LAND DEVELOPMENT STANDARDS	CBU PLACEMENT FOR SHOULDER SECTION RESIDENTIAL LOCAL AND COLLECTOR SUBDIVISION STREETS	STD. NO. 720.1 REV.

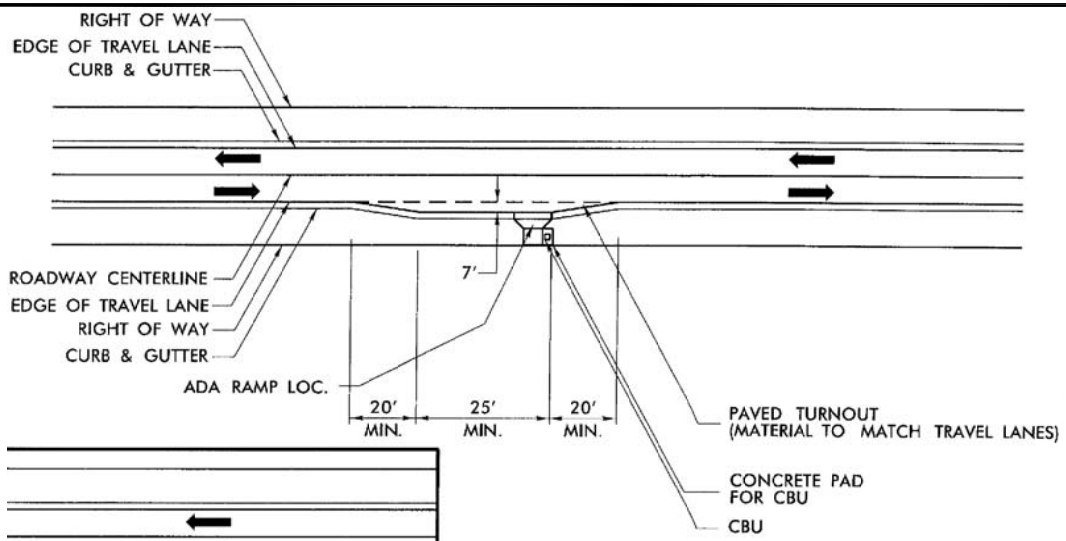

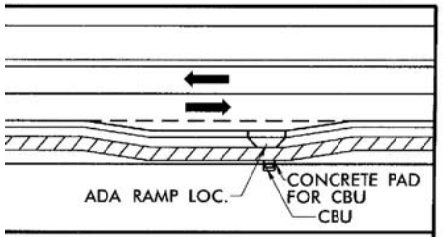

CBU LOCATION WITH SIDEWALK

NOTE:
TURNOUT NOT REQUIRED IF ALL THE FOLLOWING CONDITIONS ARE MET:

ADT $\leq$ 200
LANE WIDTH $\geq$ 15'
NO BIKE LANE

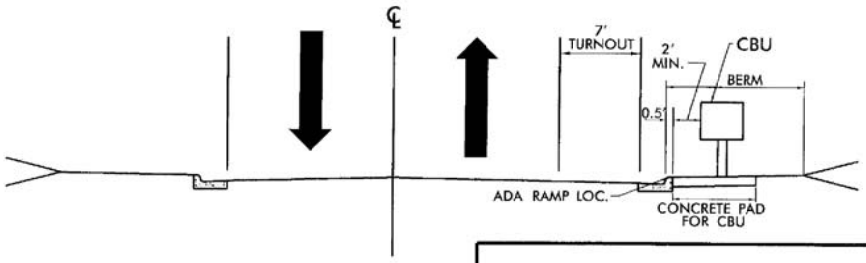

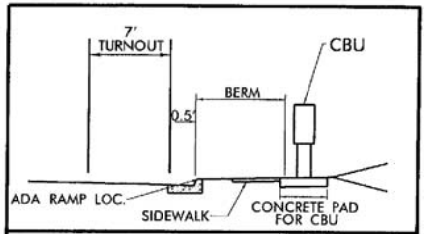

CBU LOCATION WITH SIDEWALK

NOT TO SCALE

	TOWN OF WAXHAW LAND DEVELOPMENT STANDARDS	CBU PLACEMENT FOR C & G SECTION RESIDENTIAL LOCAL AND COLLECTOR SUBDIVISION STREETS

STD. NO.	REV.
721.1	

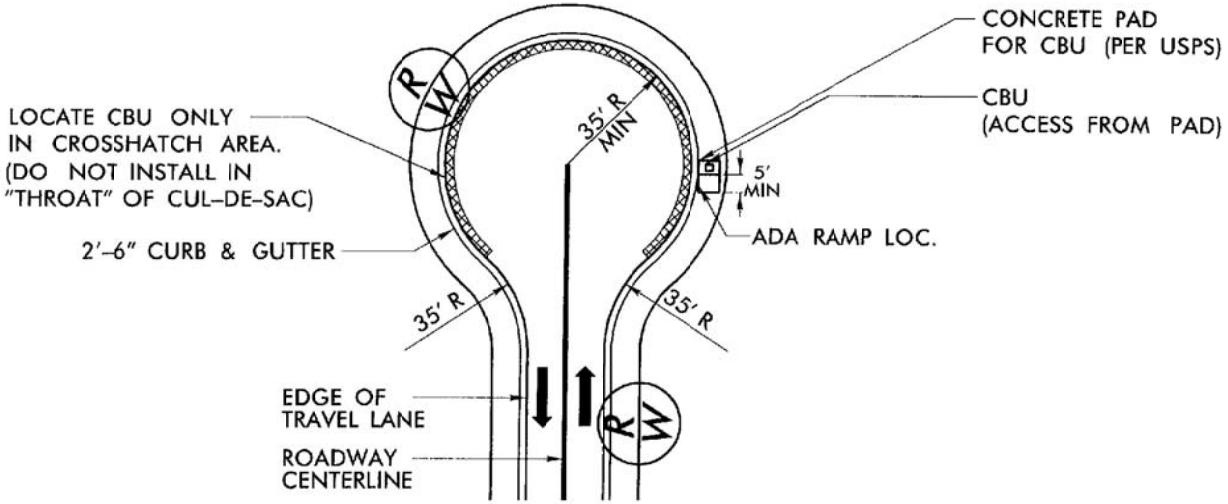

SEE FIGURE 7 PAGE 45, "NCDOT SUBDIVISION ROADS MINIMUM CONSTRUCTION STANDARDS JANUARY 2010" FOR LOCAL AND COLLECTOR ROAD DIMENSIONS.

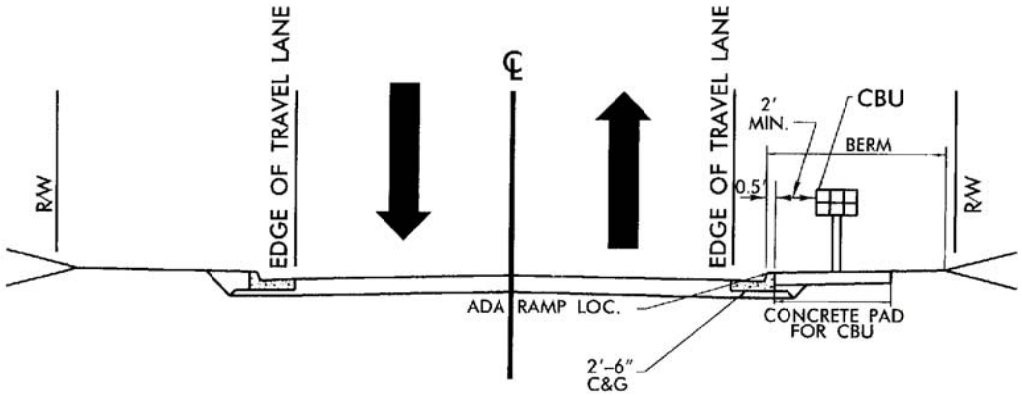

NOT TO SCALE

TOWN OF WAXHAW LAND DEVELOPMENT STANDARDS	CBU PLACEMENT FOR C & G SECTION RESIDENTIAL SUBDIVISION STREETS CUL-DE-SAC	STD. NO. 722.1 REV.

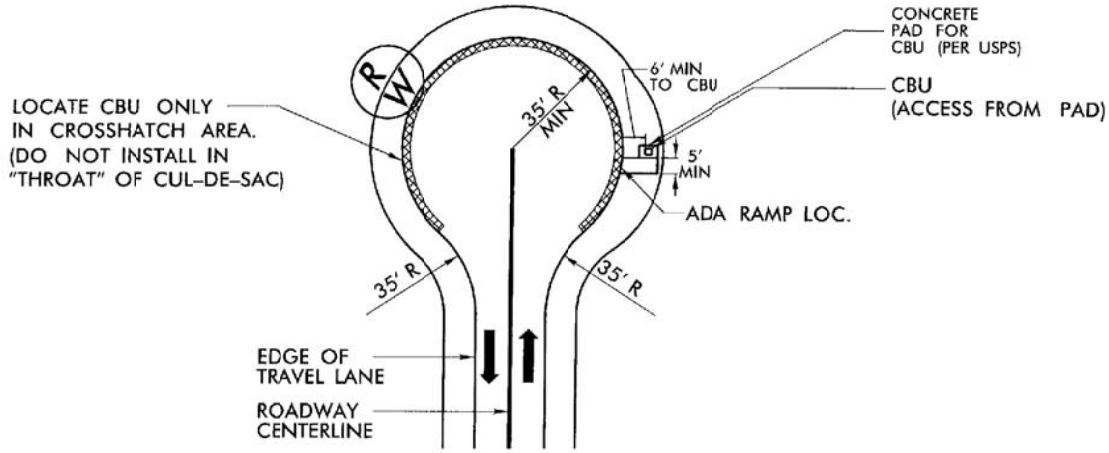

SEE FIGURE 8 PAGE 46, "NCDOT SUBDIVISION ROADS MINIMUM CONSTRUCTION STANDARDS JANUARY 2010" FOR LOCAL AND COLLECTOR ROAD DIMENSIONS.

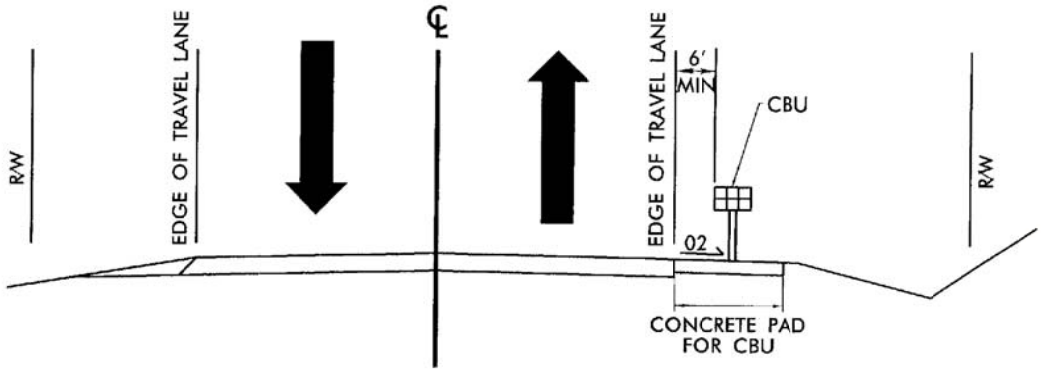

NOTE:
MAINTAIN R/W OFFSET AROUND CBU PAD

NOT TO SCALE

	TOWN OF WAXHAW LAND DEVELOPMENT STANDARDS	CBU PLACEMENT FOR SHOULDER SECTION RESIDENTIAL SUBDIVISION STREETS CUL-DE-SAC	STD. NO. 723.1 / REV.

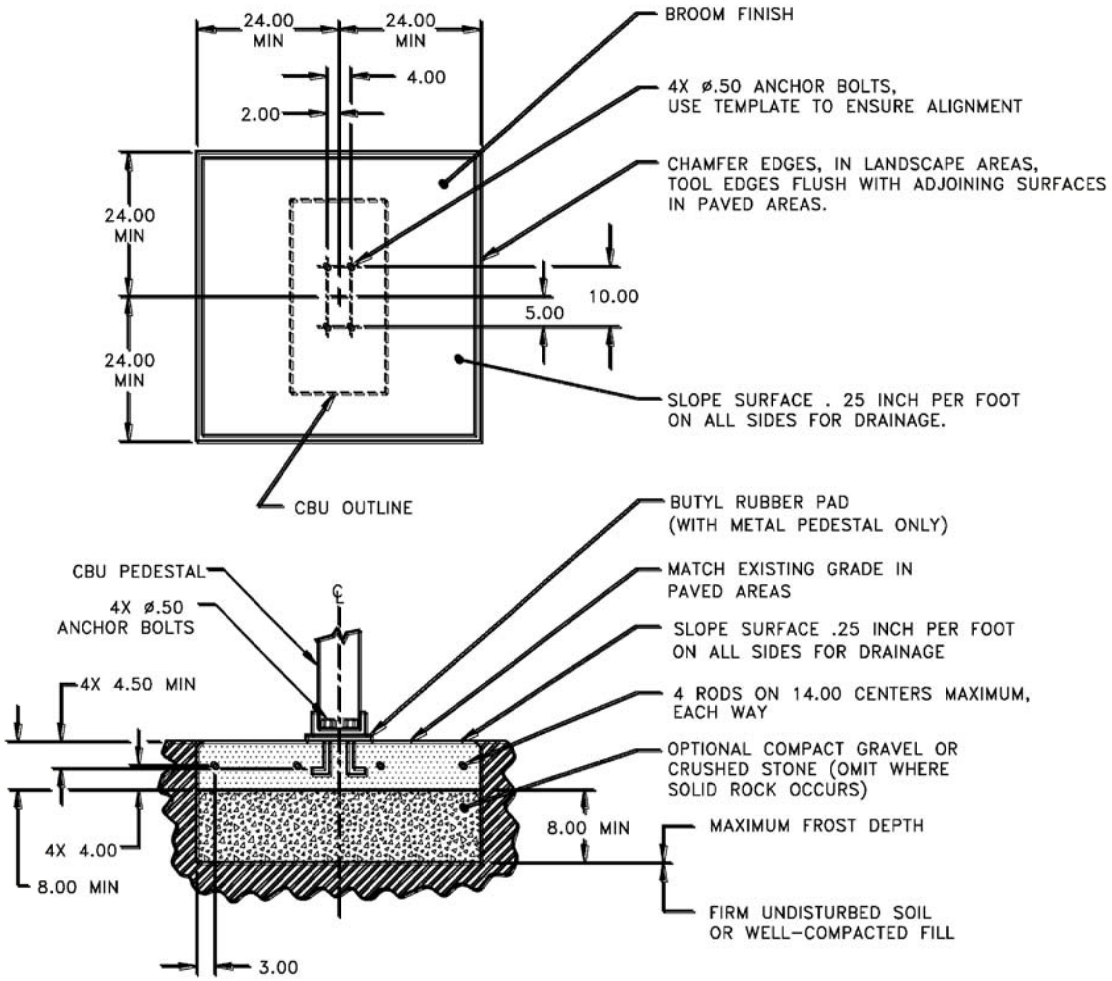

NOTES:

1. CONCRETE SHALL HAVE A COMPRESSIVE STRENGTH OF 3000 PSI @ 28 DAYS, CONTAIN 4% MIN – 6% MAX AIR ENTRAINMENT AND BE PLACED WITH A 3.50 – 4.50 SLUMP IN ACCORDANCE WITH ACI 301.
2. REINFORCING STEEL RODS SHALL CONFORM TO ASTM A615, GRADE 60.
3. ANCHOR BOLTS SHALL CONFORM TO ASTM A193, GRADE B8M, TYPE 316 STAINLESS STEEL.

NOT TO SCALE

TOWN OF WAXHAW LAND DEVELOPMENT STANDARDS	USPS APPROVED SPECIFICATIONS CONCRETE PAD (SINGLE UNIT)	STD. NO. 724.1 REV.

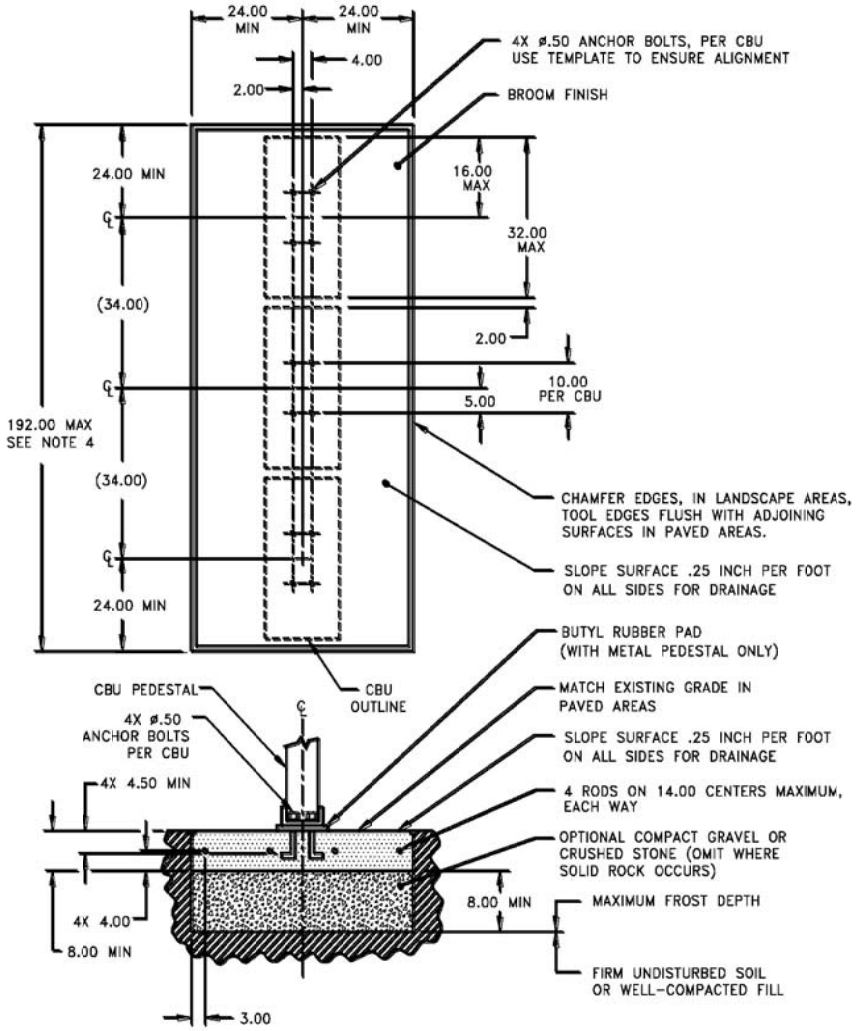

NOTES:

1. CONCRETE SHALL HAVE A COMPRESSIVE STRENGTH OF 3000 PSI @ 28 DAYS, CONTAIN 4% MIN – 6% MAX AIR ENTRAINMENT AND BE PLACED WITH A 3.50 – 4.50 SLUMP IN ACCORDANCE WITH ACI 301.
2. REINFORCING STEEL RODS SHALL CONFORM TO ASTM A615, GRADE 60.
3. ANCHOR BOLTS SHALL CONFORM TO ASTM A193, GRADE B8M, TYPE 316 STAINLESS STEEL.
4. A 3 CBJ CONFIGURATION IS DEPICTED. A 2 OR 4 CBU CONFIGURATION MAY BE USED AS LONG AS THEY ARE ARRANGED IN GROUPS SUCH THAT THE OVERALL DIMENSION OF THE CONCRETE BASE DOES NOT EXCEED 192 INCHES.

NOT TO SCALE

TOWN OF WAXHAW LAND DEVELOPMENT STANDARDS	USPS APPROVED SPECIFICATIONS CONCRETE PAD (MULTIPLE UNIT)	STD. NO. 725.1 REV.

1. 10' X 70' AND 35' X 35' SIGHT TRIANGLES SHALL BE PROVIDED ON BOTH SIDES OF THE CONNECTING ROAD WHEN A MAIN ENTRANCE ROAD FOR A SUBDIVISION IS CONNECTED TO AN EXISTING ROAD IN ACCORDANCE WITH (A). THESE DIMENSION SHALL BE MEASURED FROM THE POINT OF INTERSECTION OF THE TWO RIGHT-OF-WAY LINES LONGITUDINALLY ALONG THE RIGHT-OF-WAY LINES
2. 35' X 35' SIGHT TRIANGLES SHALL BE PROVIDED ON ALL CORNERS OF AN INTERSECTION FOR ALL INTERIOR SUBDIVISION STREETS IN ACCORDANCE WITH (B). THESE DIMENSION SHALL BE MEASURED FROM THE POINT OF INTERSECTION OF THE TWO RIGHT-OF-WAY LINES LONGITUDINALLY ALONG THE RIGHT-OF-WAY LINES
3. NO TREES, PLANTS, SHRUBS OVER 2'6" HEIGHT IN SIGHT TRIANGLE,

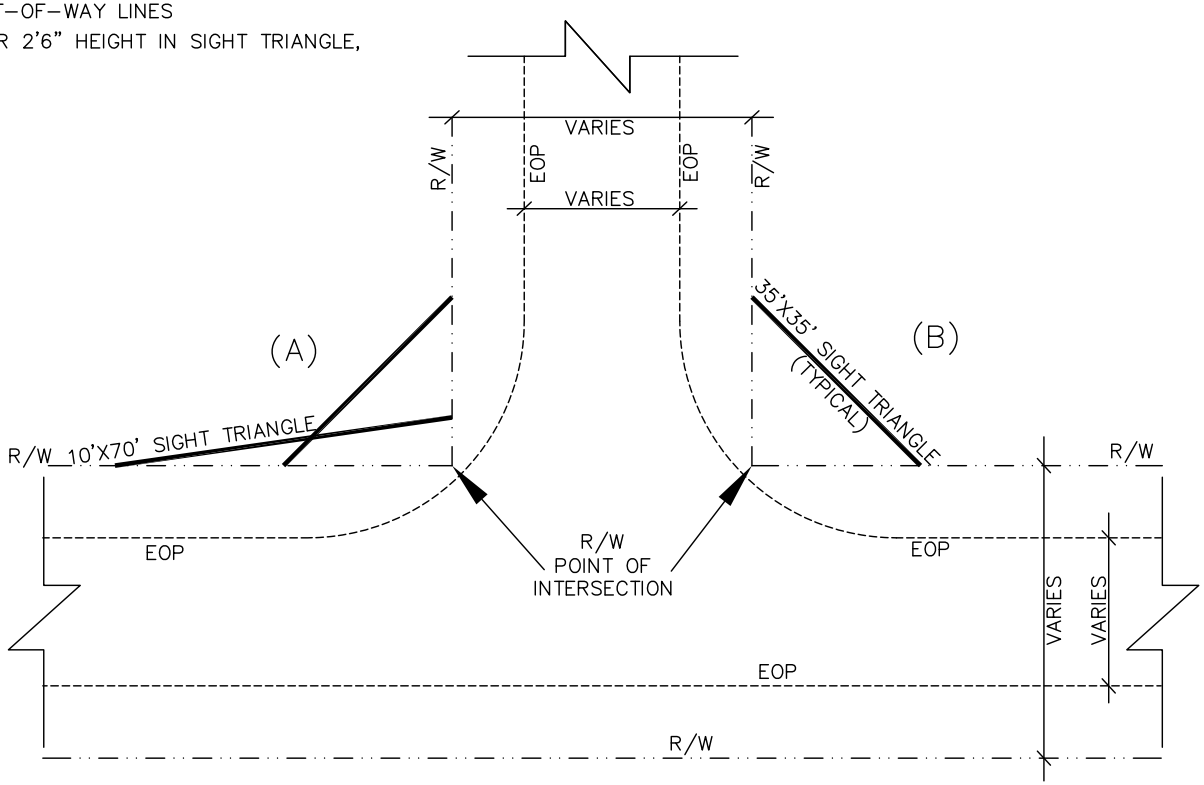

NOT TO SCALE

	TOWN OF WAXHAW LAND DEVELOPMENT STANDARDS	TYPICAL SIGHT TRIANGLES	REV. DATE STD. NO. 726.1

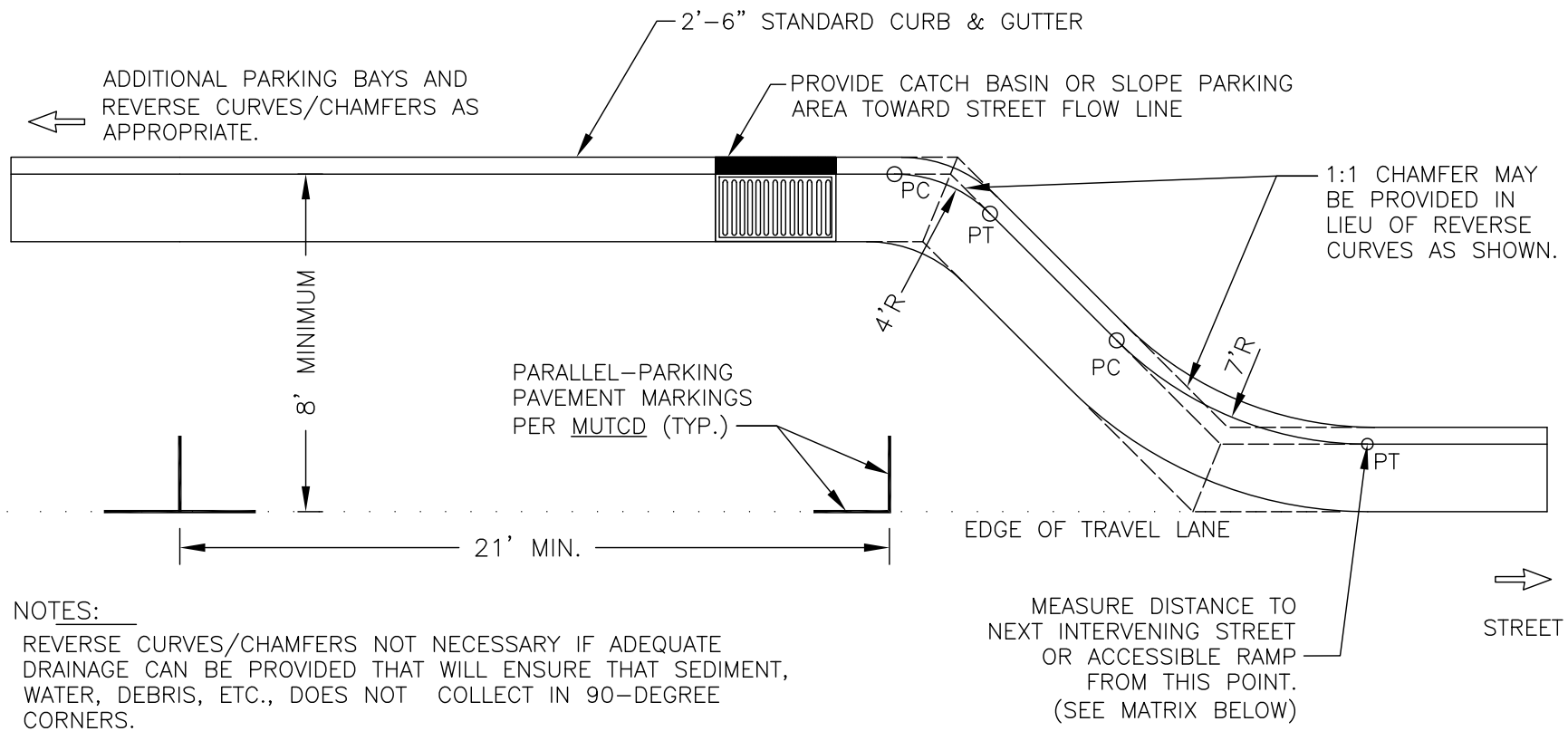

NOTES:

1. REVERSE CURVES/CHAMFERS NOT NECESSARY IF ADEQUATE DRAINAGE CAN BE PROVIDED THAT WILL ENSURE THAT SEDIMENT, WATER, DEBRIS, ETC., DOES NOT COLLECT IN 90-DEGREE CORNERS.
2. FOR PARKING BAYS THAT ARE 8 FEET IN WIDTH OR GREATER, THE PAVEMENT MARKINGS SHALL BE SET AT ONE (1) FOOT LESS THAN THE STALL WIDTH.
3. GREATER SEPARATION FROM INTERVENING STREETS THAN THE DISTANCES PROVIDED IN THE MATRIX MAY BE REQUIRED AT THE TOWN ENGINEER'S DISCRETION.
4. POSITIVE DRAINAGE SHALL BE PROVIDED EITHER BY INSTALLATION OF APPROPRIATE DRAINAGE STRUCTURES OR SLOPE PARKING AREA TO STREET FLOW LINE. SLOPING PARKING AREA TO STREET FLOW LINE ONLY PERMITTED IF ROAD GRADE IS GREATER THAN 2%.

MINIMUM DISTANCE TO NEXT INTERVENING STREET

PARALLEL PARKING BAY LOCATED ON	DRIVEWAY	LOCAL/ COLLECTOR	TH'FARE
LOCAL	20'	20'	20'

NOT TO SCALE

TOWN OF WAXHAW
LAND DEVELOPMENT STANDARDS

PARALLEL PARKING STANDARDS

STD. NO.	REV.
727.1	