# ARBY'S #8821 @ PRESCOT VILLAGE

1001 ASPINAL STREET (PROVIDENCE RD)
WAXHAW, N.C. 28173
UNION COUNTY
PARCEL #06165436
ZONED:CU-C2

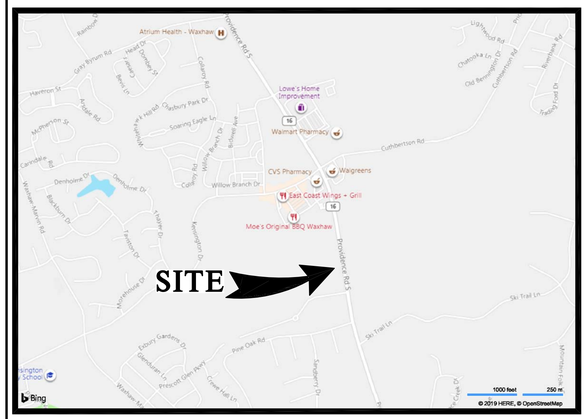


VICINITY MAP
SCALE: NTS

ANTICIPATED ACTIVITY SCHEDULE

| ACTIVITY/MONTH | | 1 | 2 | 3 | 4 | 5 | 6 |
|---|---|---|---|---|---|---|---|
| 1 | INSTALL EROSION CONTROL AND TREE PROTECTION | | | | | | |
| 2 | CLEARING AND GRADING | | | | | | |
| 3 | STORM DRAIN INSTALLATION | | | | | | |
| 4 | SANITARY SEWER INSTALLATION | | | | | | |
| 5 | GRASS (TEMP.) (PERM.) | | | | | | |
| 6 | UTILITY INSTALLATION | | | | | | |
| 7 | MAINTAIN EROSION CONTROL | | | | | | |
| 8 | BLDG. CONST. AND PAVING | | | | | | |
| 9 | FINAL LANDSCAPING | | | | | | |
| 10 | CLEAN UP | | | | | | |

NOTE:
EROSION CONTROL DEVICES ARE REQUIRED ON THIS PROJECT. CONTRACTOR TO INSTALL ANY EROSION CONTROL DEVICE THAT REDUCES EXCESS RUNOFF INTO NEIGHBORING STORMWATER SYSTEMS. THE INSTALLATION OF EROSION CONTROL MEASURES AND TREE PROTECTION DEVICES SHALL OCCUR PRIOR TO OR CONCURRENT WITH LAND DISTURBING ACTIVITIES. EROSION CONTROL MEASURES WILL BE MAINTAINED AT ALL TIMES. ADDITIONAL EROSION AND SEDIMENTATION CONTROL MEASURES WILL BE INSTALLED IF DEEMED NECESSARY BY ON SITE INSPECTION.

WATER & SEWER
UNION COUNTY PUBLIC WORKS
WATER & SEWER
500 N. MAIN ST
MONROE, NC 28112
(704) 283-3500

NATURAL GAS
PIEDMONT NATURAL GAS
JOHN HARRINGTON
(704) 572-5693

ELECTRIC
UNION POWER
COOPERATIVE, INC.
1525 N. ROCKY RIVER RD.
MONROE, NC 28110
(800) 922-6840

PLANNING-ZONING
TOWN OF WAXHAW
PLANNING DEPARTMENT
1150 N. BROOME ST
WAXHAW, NC 28173
704-843-2195

STORM WATER & EROSION CONTROL
DEVELOPMENT SERVICES DEPT.
ENGINEERING DIVISION
1150 N. BROOME ST
WAXHAW, NC 28173
704-843-2195

INDEX OF DRAWINGS


S ..... SURVEY
C.0..... EXISTING CONDITIONS & DEMOLITION & EROSION CONTROL PH 1 PLAN
C.1..... SITE & UTILITY PLAN
C.2..... GRADING PLAN
C.3..... EROSION CONTROL PH 2 PLAN
C.4..... DETAIL SHEET
C.5..... DETAIL SHEET
C.6..... DETAIL SHEET
C.7..... DETAIL SHEET
C.8..... DETAIL SHEET
C.9..... DETAIL SHEET
LA.1..... LANDSCAPE PLAN
LA.2..... LANDSCAPE DETAIL SHEET


(The following Sheets are included FOR FOR REFERENCE ONLY)


A2.1..... EXTERIOR ELEVATIONS
A2.2..... EXTERIOR ELEVATIONS
SL.1..... SITE LIGHTING & PHOTOMETRIC PLAN


811
Know what's below.
Call before you dig.

NOTES

1. ALL STORM DRAINAGE, WATER, SEWER AND NATURAL GAS AND OTHER ON SITE UNDERGROUND UTILITIES PIPE SHALL INCLUDE A TRACER WIRE INSTALLED WITH IT.


DEVELOPER:
BRUMIT RESTAURANT GROUP, LLC
MR. TYLER LANCE
BRG Brumit Restaurant Group
P.O. BOX 15726
ASHEVILLE, NC 28813
(828) 274-5835

ENGINEER:
MDV Engineering
P-0883
C/O Ayer Design Group
215 Johnston Street
Rock Hill, SC 29730
Phone: 704-400-1044
NORTH CAROLINA PROFESSIONAL SEAL 28274 ENGINEER MICHAEL D. NEWMAN 7-1-20

CONTACT:
MR. MICHAEL D. NEWMAN, PE


JOB NO:
2020-104

## ZONING INFORMATION

AUTHORITY: TOWN OF WAXHAW
PLANNING DIVISION
ADDRESS: 1150 NORTH BROOME ST
WAXHAW, NC 28173
PHONE #: 704-843-2195

ZONING DISTRICT: CU-C2, CONDITIONAL USE HIGHWAY COMMERCIAL

CURRENT BUILDING SETBACK DISTANCES

| | |
|---|---|
| FRONT: | 20' |
| SIDE INTERIOR: | 10' |
| SIDE STREET: | 20' |
| REAR: | 20' |

## FLOOD ZONE INFORMATION

ACCORDING TO MAPPING PROVIDED BY THE FEDERAL EMERGENCY MANAGEMENT AGENCY AND SHOWN ON THE FLOOD INSURANCE RATE MAP (FIRM) TOWN OF WAXHAW, UNION COUNTY, NORTH CAROLINA PANEL NUMBER 3710447400J, EFFECTIVE DATE: OCTOBER 16, 2008, THE PROPERTY SHOWN HEREON IN NOT LOCATED WITHIN A SPECIAL FLOOD HAZARD AREA. THE PROPERTY IS ENTIRELY WITHIN AN AREA DESIGNATED ZONE X – AREAS OF MINIMAL FLOOD HAZARD.

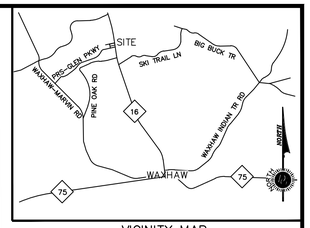


VICINITY MAP
NOT TO SCALE

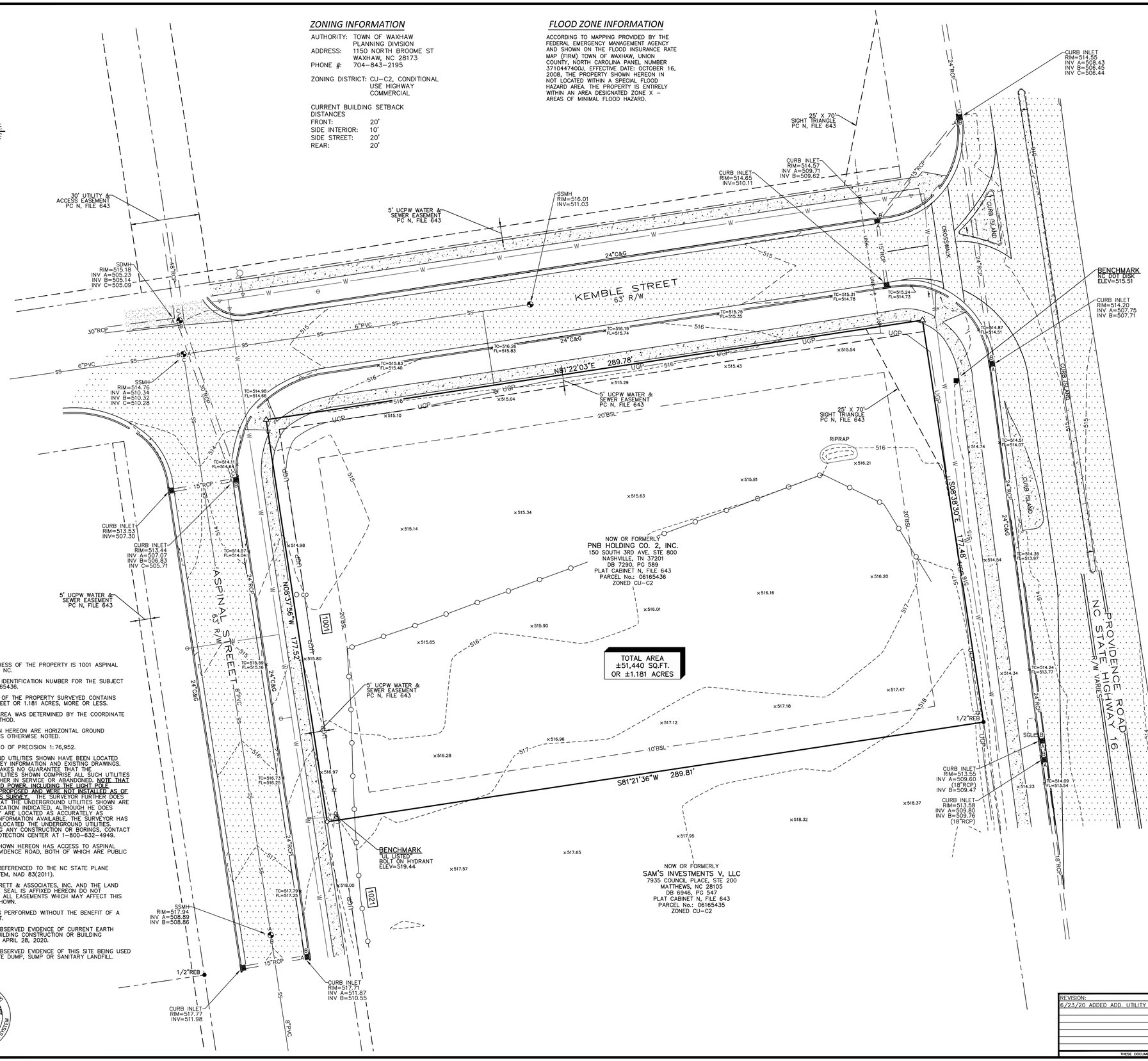


## LEGEND

| | |
|---|---|
| PROPERTY LINE | |
| ADJACENT PROPERTY LINE | |
| EASEMENT LINE | |
| SILT FENCE | |
| BUILDING SETBACK LINE | BSL |
| EXISTING CONTOUR LINE | 517 |
| FUTURE UNDERGROUND POWER LINE | UGP |
| SANITARY SEWER LINE | SS |
| STORM SEWER LINE | 18" RCP |
| IRON PIN FOUND (SIZE AND TYPE AS NOTED) | ● |
| STATE DOT MONUMENT | ■ |
| 1/2" REBAR W/ CAP SET | ○ |
| NAIL & DISK SET | △ |
| TRAFFIC SIGNAL JUNCTION BOX | SGL |
| WATER VALVE | ▽ |
| WATER METER | ⊖ |
| FIRE HYDRANT | |
| STORM MANHOLE | SDMH |
| DROP INLET | |
| SANITARY MANHOLE | SSMH |
| CLEANOUT | CO |
| SIGN | |
| FUTURE LIGHT POLE | |
| STREET ADDRESS | 1001 |
| ASPHALT | |
| CONCRETE | |
| GRAVEL | |
| SPOT ELEVATION | × 515.81 |

## NOTES

1. THE STREET ADDRESS OF THE PROPERTY IS 1001 ASPINAL STREET, WAXHAW, NC.
2. THE TAX PARCEL IDENTIFICATION NUMBER FOR THE SUBJECT PROPERTY IS 06165436.
3. THE TOTAL AREA OF THE PROPERTY SURVEYED CONTAINS 51,440 SQUARE FEET OR 1.181 ACRES, MORE OR LESS.
4. THIS PROPERTY AREA WAS DETERMINED BY THE COORDINATE COMPUTATION METHOD.
5. DISTANCES SHOWN HEREON ARE HORIZONTAL GROUND DISTANCES UNLESS OTHERWISE NOTED.
6. UNADJUSTED RATIO OF PRECISION 1:76,952.
7. ANY UNDERGROUND UTILITIES SHOWN HAVE BEEN LOCATED FROM FIELD SURVEY INFORMATION AND EXISTING DRAWINGS. THE SURVEYOR MAKES NO GUARANTEE THAT THE UNDERGROUND UTILITIES SHOWN COMPRISE ALL SUCH UTILITIES IN THE AREA, EITHER IN SERVICE OR ABANDONED. NOTE THAT THE UNDERGROUND POWER, INCLUDING THE LIGHT POLE LOCATIONS, ARE PROPOSED AND WERE NOT INSTALLED AS OF THE DATE OF THIS SURVEY. THE SURVEYOR FURTHER DOES NOT WARRANT THAT THE UNDERGROUND UTILITIES SHOWN ARE IN THE EXACT LOCATION INDICATED, ALTHOUGH HE DOES STATE THAT THEY ARE LOCATED AS ACCURATELY AS POSSIBLE FROM INFORMATION AVAILABLE. THE SURVEYOR HAS NOT PHYSICALLY LOCATED THE UNDERGROUND UTILITIES. BEFORE BEGINNING ANY CONSTRUCTION OR BORINGS, CONTACT THE UTILITIES PROTECTION CENTER AT 1-800-632-4949.
8. THE PROPERTY SHOWN HEREON HAS ACCESS TO ASPINAL STREET AND PROVIDENCE ROAD, BOTH OF WHICH ARE PUBLIC STREETS.
9. THIS SURVEY IS REFERENCED TO THE NC STATE PLANE COORDINATE SYSTEM, NAD 83(2011).
10. DONALDSON, GARRETT & ASSOCIATES, INC. AND THE LAND SURVEYOR WHOSE SEAL IS AFFIXED HEREON DO NOT GUARANTEE THAT ALL EASEMENTS WHICH MAY AFFECT THIS PROPERTY ARE SHOWN.
11. THIS SURVEY WAS PERFORMED WITHOUT THE BENEFIT OF A TITLE COMMITMENT.
12. THERE WAS NO OBSERVED EVIDENCE OF CURRENT EARTH MOVING WORK, BUILDING CONSTRUCTION OR BUILDING ADDITIONS AS OF APRIL 28, 2020.
13. THERE WAS NO OBSERVED EVIDENCE OF THIS SITE BEING USED AS A SOLID WASTE DUMP, SUMP OR SANITARY LANDFILL.

CALL BEFORE YOU DIG! 1-800-632-4949 NORTH CAROLINA ONE CALL SYSTEM

## SURVEYOR'S CERTIFICATE

THIS IS TO CERTIFY THAT THIS MAP OR PLAT AND THE SURVEY ON WHICH IT IS BASED WERE MADE IN ACCORDANCE WITH THE 2016 MINIMUM STANDARD DETAIL REQUIREMENTS FOR ALTA/NSPS LAND TITLE SURVEYS, JOINTLY ESTABLISHED AND ADOPTED BY ALTA AND NSPS, AND INCLUDES ITEMS 1, 2, 3, 4, 6(A), 6(B), 7(A), 7(B 1&2), 7(C), 8, 9, 11(A), 11(B), 13, 16, AND 18 OF TABLE A THEREOF. THE FIELD WORK WAS COMPLETED ON APRIL 28, 2020.

"I, JOHN M. STORY, CERTIFY THAT THIS SURVEY IS OF AN EXISTING PARCEL OR PARCELS OF LAND OR ONE OR MORE EXISTING EASEMENTS AND DOES NOT CREATE A NEW STREET OR CHANGE AN EXISTING STREET."

"I, JOHN M. STORY, CERTIFY THAT THIS PLAT WAS DRAWN UNDER MY SUPERVISION FROM AN ACTUAL SURVEY MADE UNDER MY SUPERVISION (DEED DESCRIPTION RECORDED IN DB 7290, PG 589, UNION COUNTY RECORDS.); THAT THE RATIO OF PRECISION AS CALCULATED IS 1:76,952; THAT THIS PLAT WAS PREPARED IN ACCORDANCE WITH G.S. 47-30 AS AMENDED.

WITNESS MY ORIGINAL SIGNATURE, REGISTRATION NUMBER AND SEAL THIS 1st DAY OF MAY A.D. 2020."

JOHN M. STORY
PROFESSIONAL LAND SURVEYOR L-3840

June 23, 2020
DATE

NORTH CAROLINA PROFESSIONAL SEAL L-3840 LAND SURVEYOR JOHN M. STORY

20 0 20 40 60
GRAPHIC SCALE IN FEET

BOUNDARY & TOPOGRAPHIC SURVEY
FOR
MDV ENGINEERING
PROPOSED ARBY'S
1001 ASPINAL STREET – PARCEL D – PRESCOT VILLAGE
TOWN OF WAXHAW UNION COUNTY NORTH CAROLINA

| REVISION: | DWN.BY: | DATE: |
|---|---|---|
| 6/23/20 ADDED ADD. UTILITY EASEMENT. | JH | MAY 1, 2020 |
| | CKD.BY JMS | SCALE: 1"=20' |
| | FIELDBOOK N/A | PROJECT NO. 4191-006-N1 |
| | PLS NO. L-3840 | DRAWING NO. NC-023-20-D |

Donaldson Garrett & Associates, Inc.
MACON • CHARLOTTE
9741-L SOUTHERN PINE BOULEVARD
CHARLOTTE, N.C. 28273
(704) 374-1955
http://www.dg-a.com
John.Story@dg-anc.com
NC CORPORATE LICENSE NO. C-1518

THESE DOCUMENTS, AS INSTRUMENTS OF SERVICE, REMAIN THE PROPERTY OF D, G & A AND NO PART THEREOF MAY BE USED OR REPRODUCED IN ANY FORM WITHOUT WRITTEN PERMISSION.

**NOTES:**

*ALL "STD." NUMBERS REFER TO THE TOWN OF WAXHAW ENGINEERING DESIGN & CONSTRUCTION STANDARDS PROCEDURES MANUAL.*

1. ON-SITE BURIAL PITS REQUIRE AN ON-SITE DEMOLITION LANDFILL PERMIT FROM THE ZONING ADMINISTRATOR.
2. ANY GRADING BEYOND THE DENUDED LIMITS SHOWN ON THE PLAN IS A VIOLATION OF THE TOWN'S EROSION CONTROL ORDINANCE AND IS SUBJECT TO A FINE.
3. GRADING MORE THAN ONE ACRE WITHOUT AN APPROVED EROSION CONTROL PLAN IS A VIOLATION OF THE TOWN'S EROSION CONTROL ORDINANCE AND IS SUBJECT TO A FINE.
4. ALL PERIMETER DIKES, SWALES, DITCHES, PERIMETER SLOPES AND ALL SLOPES STEEPER THAN 3 HORIZONTAL TO 1 VERTICAL (3:1) SHALL BE PROVIDED TEMPORARY OR PERMANENT STABILIZATION WITH GROUND COVER AS SOON AS PRACTICABLE BUT IN ANY EVENT WITHIN 7 CALENDAR DAYS FROM THE LAST LAND-DISTURBING ACTIVITY.
5. ALL OTHER DISTURBED AREAS SHALL BE PROVIDED TEMPORARY OR PERMANENT STABILIZATION WITH GROUND COVER AS SOON AS PRACTICABLE BUT IN ANY EVENT WITHIN 14 CALENDAR DAYS FROM THE LAST LAND DISTURBING ACTIVITY.
6. ADDITIONAL MEASURES TO CONTROL EROSION AND SEDIMENT MAY BE REQUIRED BY A REPRESENTATIVE OF THE TOWN OF WAXHAW ENGINEERING DIVISION.
7. SLOPES SHALL BE GRADED NO STEEPER THAN 2:1. FILL SLOPES GREATER THAN 10'HIGH REQUIRE ADEQUATE TERRACING.
8. A GRADING PLAN MUST BE SUBMITTED FOR ANY LOT GRADING EXCEEDING ONE ACRE THAT WAS NOT PREVIOUSLY APPROVED.
9. DRIVEWAY PERMIT FOR CONSTRUCTION ENTRANCES IN NCDOT RIGHT OF WAY MUST BE PRESENTED AT PRE-CONSTRUCTION MEETING.
10. THE PRODOMINANT SOIL ON-SITE IS CHA: CHEWACLA SILT LOAM, 0 TO 2 PERCENT SLOPES, FREQUENTLY FLOODED.

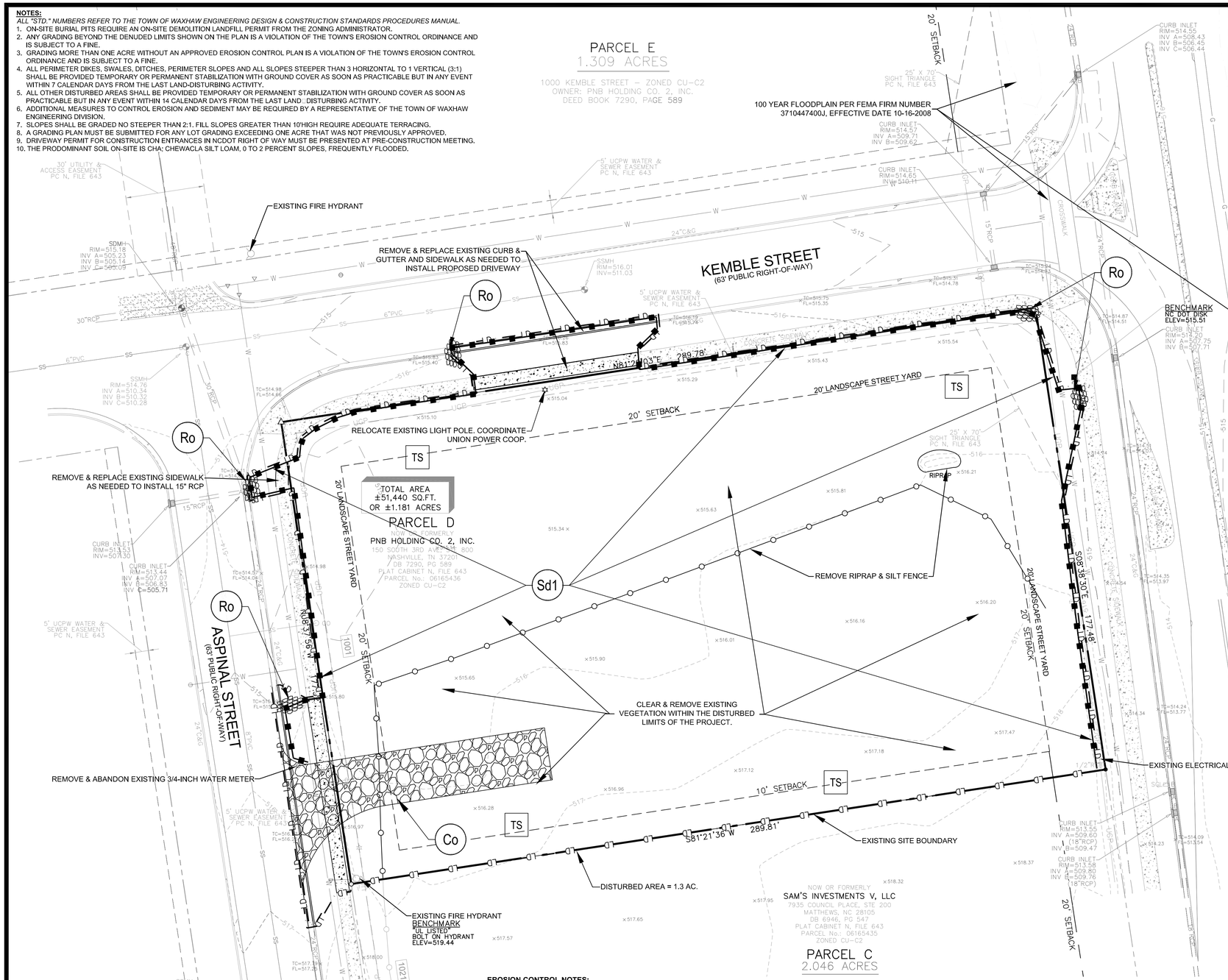


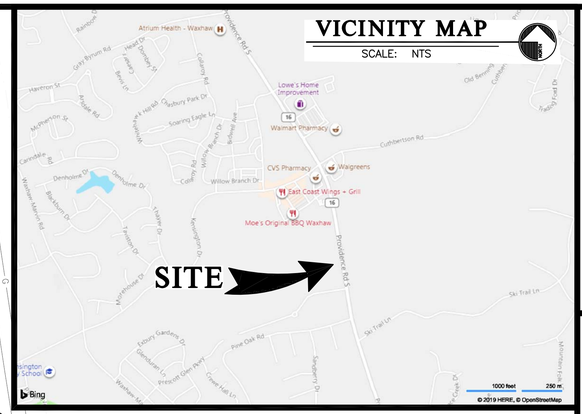


## STANDARD STRUCTURAL PRACTICES

| CODE | PRACTICE | STD DETAIL # | MAP SYMBOL | DESCRIPTION |
|---|---|---|---|---|
| Co | CONSTRUCTION EXIT | 514.1 | | A crushed stone pad located at the construction exit to provide a place for removing mud from tires thereby protecting public streets. |
| Sd1 | SEDIMENT BARRIER | 607.1 | | A temporary sediment control measure consisting of fabric buried at the bottom, stretched, and supported by posts. |
| St1 | TEMP. FABRIC DROP INLET PROTECTION | 512.1 & 519.1 | | Temporary fabric barrier placed around or in a drop inlet/catch basin. |
| Ro | SILT FENCE ROCK OUTLET | 509.1 | | Stone filter berm outlet located at the low point of the silt fence row |
| | DISTURBED AREA STABILIZATION (WITH TEMPORARY SEEDING) | 521.1 | TS | Establishing a temporary vegetative cover with fast growing seedings on disturbed areas. |
| PS | DISTURBED AREA STABILIZATION (WITH PERMANENT SEEDING) | | PS | Establishing permanent vegetative cover such as trees, shrubs, vines, sod, grasses or legumes on disturbed areas. |

**CONSTRUCTION SEQUENCE**

1. OBTAIN GRADING/EROSION CONTROL PLAN APPROVAL FROM THE TOWN OF WAXHAW ENGINEERING DEPARTMENT.
2. SET UP A ON?SITE PRE?CONSTRUCTION CONFERENCE WITH EROSION CONTROL INSPECTOR OF THE TOWN ENGINEERING DEPARTMENT, AT 704-843-2195, TO DISCUSS EROSION CONTROL MEASURES. FAILURE TO SCHEDULE SUCH CONFERENCE 48 HOURS PRIOR TO ANY LAND DISTURBING ACTIVITY IS A VIOLATION OF CHAPTER 17 OF THE TOWN CODE AND IS SUBJECT TO FINE.
3. INSTALL SILT FENCE, INLET PROTECTION, CONSTRUCTION ENTRANCE, AND OTHER MEASURES AS SHOWN ON PLANS, CLEARING ONLY AS NECESSARY TO INSTALL THESE DEVICES.
4. CALL FOR ON?SITE INSPECTION BY INSPECTOR. WHEN APPROVED, INSPECTOR ISSUES THE GRADING PERMIT AND CLEARING AND GRUBBING MAY BEGIN.
5. THE CONTRACTOR SHALL DILIGENTLY AND CONTINUOUSLY MAINTAIN ALL EROSION CONTROL DEVICES AND STRUCTURES.
6. FOR PHASED EROSION CONTROL PLANS, CONTRACTOR SHALL MEET WITH EROSION CONTROL INSPECTOR PRIOR TO COMMENCING WITH EACH PHASE OF EROSION CONTROL MEASURES.
7. STABILIZE SITE AS AREAS ARE BROUGHT TO FINISHED GRADE.
8. COORDINATE WITH EROSION CONTROL INSPECTOR PRIOR TO REMOVAL OF EROSION CONTROL MEASURE.
9. ALL EROSION CONTROL MEASURES SHALL BE CONSTRUCTED IN ACCORDANCE WITH THE N. C. EROSION AND SEDIMENT CONTROL PLANNING AND DESIGN MANUAL, U. S. DEPT. OF AGRICULTURE, TOWN OF WAXHAW EROSION CONTROL ORDINANCE.
10. PROCEED TO NEXT EROSION CONTROL PHASE.

0 10' 20' 40' 40'
SCALE: 1"= 20'

**EROSION CONTROL NOTES:**

1. IF DISTURBING LESS THAN 1 ACRE, ADD THIS NOTE: GROUND COVER ON EXPOSED SLOPES SHALL BE APPLIED WITHIN 14 WORKING DAYS FOLLOWING COMPLETION OF ANY PHASE OF GRADING. PERMANENT GROUND COVER FOR ALL DISTURBED AREAS SHALL BE APPLIED WITHIN 15 WORKING DAYS OR 60 CALENDAR DAYS, WHICHEVER IS SOONER. SLOPES LEFT EXPOSED WILL, WITHIN 14 CALENDAR DAYS OF COMPLETION OF ANY PHASE OF GRADING, BE PLANTED OR OTHERWISE PROVIDED WITH TEMPORARY OR PERMANENT GROUND COVER, DEVICES, OR STRUCTURES SUFFICIENT TO RESTRAIN EROSION.
2. IF DISTURBING 1 ACRE OR MORE, ADD THIS NOTE: AS REQUIRED BY THE NPDES GENERAL PERMIT NCG010000, ALL PERIMETER DIKES, SWALES, DITCHES, PERIMETER SLOPES AND ALL SLOPES STEEPER THAN 3 HORIZONTAL TO 1 VERTICAL (3:1) SHALL BE PROVIDED TEMPORARY OR PERMANENT STABILIZATION WITH GROUND COVER AS SOON AS PRACTICABLE BUT IN ANY EVENT WITHIN 7 CALENDAR DAYS FROM THE LAST LAND DISTURBING ACTIVITY. ALL OTHER DISTURBED AREAS SHALL BE PROVIDED TEMPORARY OR PERMANENT STABILIZATION WITH GROUND COVER AS SOON AS PRACTICABLE BUT IN ANY EVENT WITHIN 14 CALENDAR DAYS FROM THE LAST LAND DISTURBING ACTIVITY. GROUND STABILIZATION TIMEFRAME EXEMPTIONS CAN BE FOUND IN THE NPDES GENERAL PERMIT NCG010000 UNDER SECTION 2.B. GROUND STABILIZATION.
3. NO LAND DISTURBING ACTIVITY, EXCEPT THAT WHICH IS REQUIRED TO INSTALL EROSION CONTROL MEASURES, MAY COMMENCE PRIOR TO APPROVAL BY THE DIRECTOR OF DEVELOPMENT SERVICES.
4. ADDITIONAL EROSION CONTROL MEASURES MAY BE REQUIRED BASED UPON SPECIFIC SITE CONDITIONS.
5. CONTACT THE TOWN OF WAXHAW DEVELOPMENT SERVICES DEPARTMENT, AT 704-843-2195, FOR A PRE- CONSTRUCTION MEETING PRIOR TO ANY LAND DISTURBING ACTIVITY.
6. REMOVE ALL TEMPORARY EROSION CONTROL DEVICES AND STRUCTURES ONLY AFTER SITE IS FULLY STABILIZED AND APPROVAL HAS BEEN OBTAINED FROM THE TOWN OF WAXHAW DEVELOPMENT SERVICES DEPARTMENT.
7. ALL EROSION CONTROL DESIGNS SHALL BE IN ACCORDANCE WITH THE TOWN OF WAXHAW ENGINEERING, STANDARDS AND PROCEDURES MANUAL, AND THE NCDEQ EROSION AND SEDIMENTATION CONTROL PLANNING AND DESIGN MANUAL, LATEST EDITION.
8. FOR PHASED EROSION CONTROL PLANS, THE CONTRACTOR SHALL MEET WITH THE EROSION CONTROL SPECIALIST PRIOR TO COMMENCING EACH PHASE OF EROSION CONTROL MEASURES.
9. SITE GRADING IS TO BE COVERED UNDER THE GENERAL STORMWATER PERMIT NCG010000. ANY LAND DISTURBING ACTIVITY > 1 ACRE REQUIRES COMPLIANCE WITH ALL CONDITIONS OF THIS GENERAL PERMIT UNDER THE NPDES. ANY NONCOMPLIANCE IS A VIOLATION OF THE CLEAN WATER ACT AND MAY REQUIRE ENFORCEMENT BY NCDEQ.
10. CONTRACTOR IS TO KEEP STREET CLEAR OF MUD AND OTHER DEBRIS.
11. THE PROFESSIONAL ENGINEER REGISTERED WITH THE STATE OF NORTH CAROLINA WHO PREPARED THE EROSION CONTROL PLAN IS SOLELY RESPONSIBLE FOR IDENTIFICATION AND LOCATION OF ALL ENVIRONMENTAL WETLANDS, PERENNIAL AND INTERMITTENT STREAMS AND BUFFERS SHOWN ON THE PLANS.
12. THE TOWN OF WAXHAW IS NOT RESPONSIBLE FOR THE ACCURACY AND ADEQUACY OF THE DESIGN, DIMENSIONS, AND ELEVATIONS, WHICH SHALL BE CONFIRMED AND CORRELATED AT THE JOB SITE. THE TOWN OF WAXHAW, THROUGH THE APPROVAL OF THIS DOCUMENT, ASSUMES NO RESPONSIBILITY FOR THE COMPLETENESS AND/OR ACCURACY OF THIS DOCUMENT.
13. SILT SACKS WILL BE PLACED IN BASINS/INLETS ALONG ROADWAYS AFTER INITIAL ASPHALT SURFACE WORK IS COMPLETED.
14. THE FINANCIALLY RESPONSIBLE PARTY/AGENT OR THE LANDOWNER/AGENT OF A LAND DISTURBING ACTIVITY > ONE ACRE IS REQUIRED TO SELF-INSPECT THE PROJECT. A SELF INSPECTION, AS WELL AS DOCUMENTATION OF A PROJECT AFTER EACH PHASE OF THE PROJECT, IS REQUIRED.

*LEGEND*

PROPERTY LINE
ADJACENT PROPERTY LINE
EASEMENT LINE
SILT FENCE
BUILDING SETBACK LINE — BSL
EXISTING CONTOUR LINE — 515
FUTURE UNDERGROUND POWER LINE — UGP
SANITARY SEWER LINE — SS
STORM SEWER LINE — 18" RCP
IRON PIN FOUND (SIZE AND TYPE AS NOTED)
STATE DOT MONUMENT
1/2" REBAR W/ CAP SET
NAIL & DISK SET
TRAFFIC SIGNAL JUNCTION BOX — SGL
WATER VALVE
WATER METER
FIRE HYDRANT
STORM MANHOLE — SDMH
DROP INLET
SANITARY MANHOLE — SSMH
CLEANOUT — CO
SIGN
FUTURE LIGHT POLE
STREET ADDRESS — 1001
CONCRETE
GRAVEL
SPOT ELEVATION — × 515.81


MDV Engineering P-0883
C/O Ayer Design Group
215 Johnston Street
Rock Hill, SC 29730
Phone: 704-400-1044
Email:michael@mdveng.com


NORTH CAROLINA PROFESSIONAL SEAL 28274 ENGINEER MICHAEL D. NEUMANN 7-1-20

PROJECT

Arby's

RESTAURANT w/ DRIVE-THRU

#8821
1001 ASPINAL ST.
WAXHAW, NC 28173
(PROVIDENCE ROAD)

FOR

BRG Brumit Restaurant Group

BRUMIT RESTAURANT GROUP, LLC
P.O. BOX 15726
ASHEVILLE, NC 28813
PH: 828.274.5835

REVISIONS

DWG. NAME : 2020-104
DRAWN BY : MDN
DATE. : 5-26-20
SCALE: 1:20

**EXISTING CONDITIONS, DEMOLITION & EROSION PH 1 PLAN**

**C.0**

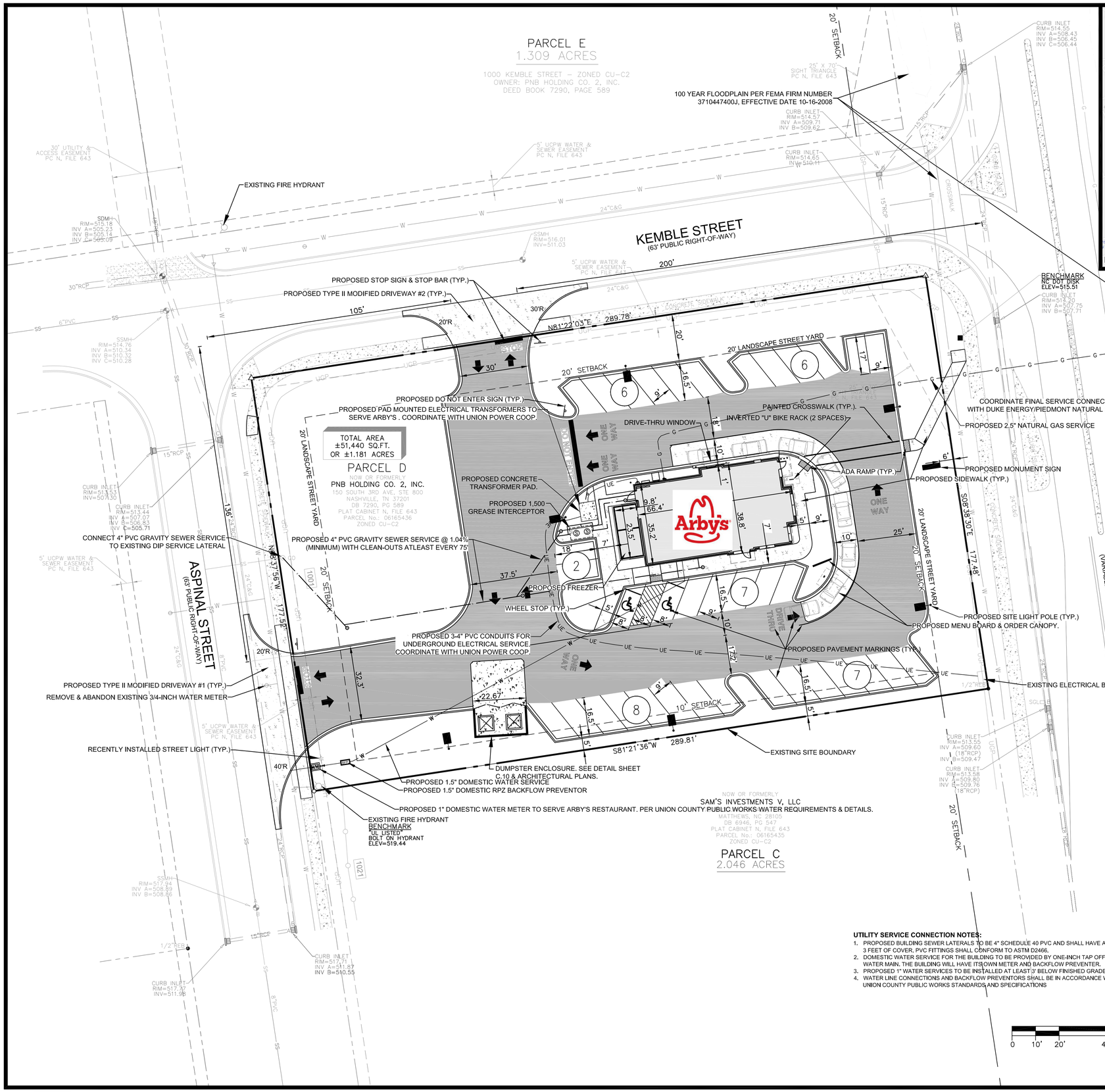

## SITE ANALYSIS

| | |
|---|---|
| TAX PARCEL NUMBER | 06165436 |
| SITE AREA | (51,440 SF) ±1.181 ACRES |
| EXISTING ZONING | CU–C–2 |
| EXISTING USE | VACANT |
| PROPOSED USE | RESTAURANT w/ DRIVE–THRU |
| BUILDING HEIGHT | ±19' |
| PROPOSED BUILDING SIZE | 2,400 SF |
| # OF SEATS | 44 |
| MAX. PARKING REQUIRED @ 15 per 1000 SF of building area | 36 SPACES |
| PARKING PROVIDED | 36 SPACES |
| MAX. LOT COVERAGE ALLOWED (% IMPERVIOUS) | (41,152 SF) 80.0% |
| LOT COVERAGE PROVIDED (% IMPERVIOUS) | (30,866 SF) 60.0% |

## PAVING LEGEND

CONCRETE PAVEMENT
ITEM 710 6" PORTLAND CEMENT CONCRETE (4500 PSI)
PAVEMENT #4 BARS @ 12" O.C. EACH WAY
ITEM 520 6" GRADED AGGREGATE BASE

LIGHT DUTY PAVEMENT
ITEM 610 2.5" TYPE S 9.5A ASPHALTIC CONCRETE SURFACE COURSE (IN TWO LIFTS)
ITEM 520 6" GRADED AGGREGATE BASE COURSE (ABC)

HEAVY DUTY PAVEMENT
ITEM 610 1.5" TYPE S 9.5A ASPHALTIC CONCRETE SURFACE COURSE
ITEM 610 2.5" TYPE I 19.0B ASPHALTIC CONCRETE
ITEM 520 8" GRADED AGGREGATE BASE COURSE (ABC)

DOMESTIC WATER & WASTEWATER FLOW CALCULATIONS

MINIMUM DESIGN FLOWS PER NCAC 02T.0114.

PROPOSED 44 SEAT RESTAURANT AT 40 GAL./SEAT = 1,760 GPD (GALLONS PER DAY)

ESTIMATED TOTAL DAILY DOMESTIC WATER FLOW = 1,760 GPD
ESTIMATED TOTAL DAILY WASTEWATER FLOW = 1,760 GPD

**UTILITY SERVICE CONNECTION NOTES:**

1. PROPOSED BUILDING SEWER LATERALS TO BE 4" SCHEDULE 40 PVC AND SHALL HAVE A MINIMUM 3 FEET OF COVER. PVC FITTINGS SHALL CONFORM TO ASTM D2466.
2. DOMESTIC WATER SERVICE FOR THE BUILDING TO BE PROVIDED BY ONE-INCH TAP OFF EXISTING WATER MAIN. THE BUILDING WILL HAVE ITS OWN METER AND BACKFLOW PREVENTER.
3. PROPOSED 1" WATER SERVICES TO BE INSTALLED AT LEAST 3' BELOW FINISHED GRADE.
4. WATER LINE CONNECTIONS AND BACKFLOW PREVENTORS SHALL BE IN ACCORDANCE WITH UNION COUNTY PUBLIC WORKS STANDARDS AND SPECIFICATIONS

*LEGEND*

PROPERTY LINE
ADJACENT PROPERTY LINE
EASEMENT LINE
SILT FENCE
BUILDING SETBACK LINE — BSL
EXISTING CONTOUR LINE — 517
FUTURE UNDERGROUND POWER LINE — UGP
SANITARY SEWER LINE — SS
STORM SEWER LINE — 18" RCP
IRON PIN FOUND (SIZE AND TYPE AS NOTED)
STATE DOT MONUMENT
1/2" REBAR W/ CAP SET
NAIL & DISK SET
TRAFFIC SIGNAL JUNCTION BOX — SGL
WATER VALVE
WATER METER
FIRE HYDRANT
STORM MANHOLE — SDMH
DROP INLET
SANITARY MANHOLE — SSMH
CLEANOUT — CO
SIGN
FUTURE LIGHT POLE
STREET ADDRESS — 1001
CONCRETE
GRAVEL
SPOT ELEVATION — × 515.81


MDV Engineering P-0883
C/O Ayer Design Group
215 Johnston Street
Rock Hill, SC 29730
Phone: 704-400-1044
Email:michael@mdveng.com


NORTH CAROLINA PROFESSIONAL SEAL 28274 ENGINEER MICHAEL D. NEUMAN 7-1-20

PROJECT

Arby's

# RESTAURANT w/ DRIVE-THRU

#8821
1001 ASPINAL ST.
WAXHAW, NC 28173
(PROVIDENCE ROAD)

FOR

BRG Brumit Restaurant Group


BRUMIT RESTAURANT GROUP, LLC
P.O. BOX 15726
ASHEVILLE, NC 28813
PH: 828.274.5835


REVISIONS

DWG. NAME : 2020–104
DRAWN BY : MDN
DATE. : 5–26–20
SCALE: 1:20

**SITE & UTILITY PLAN**

C.1

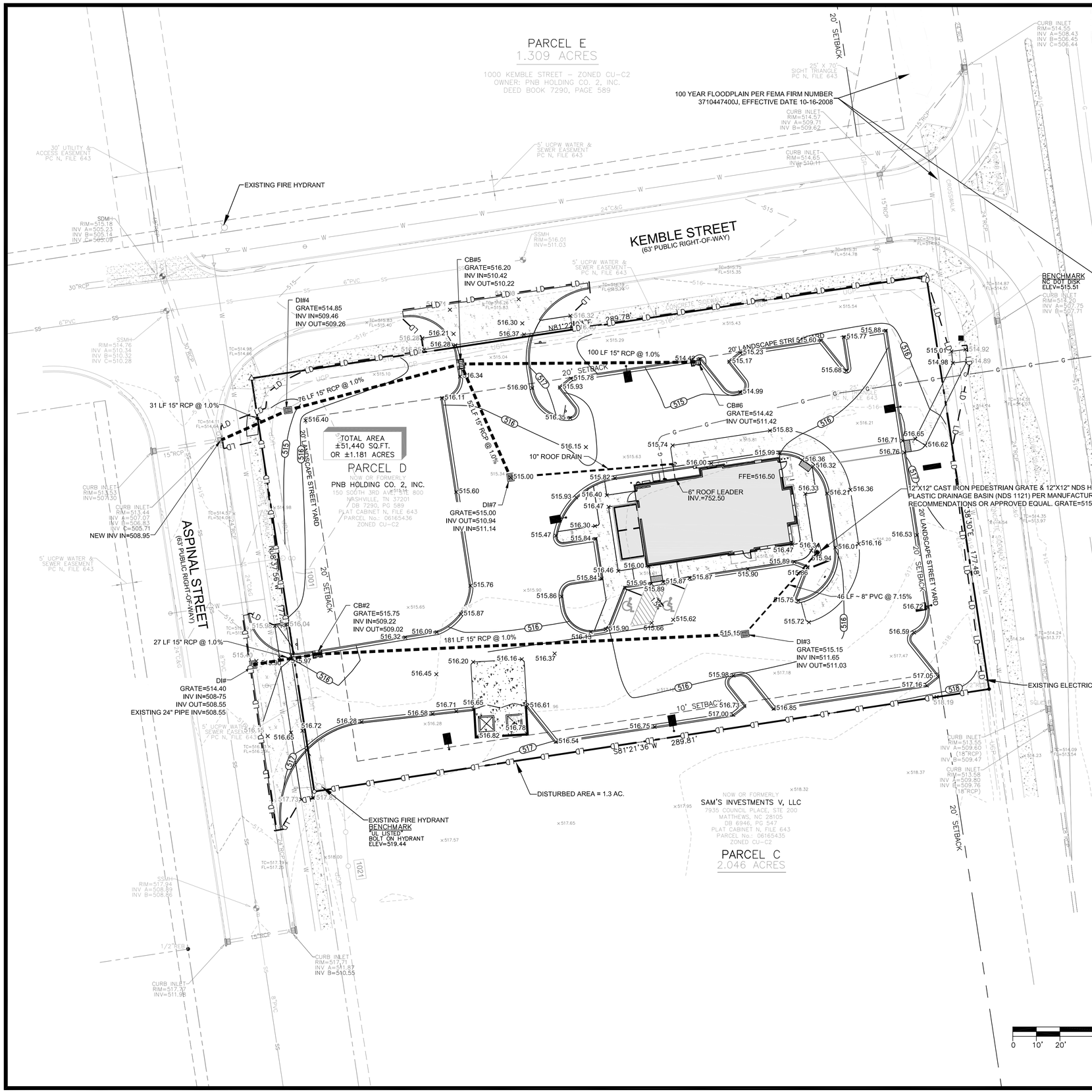


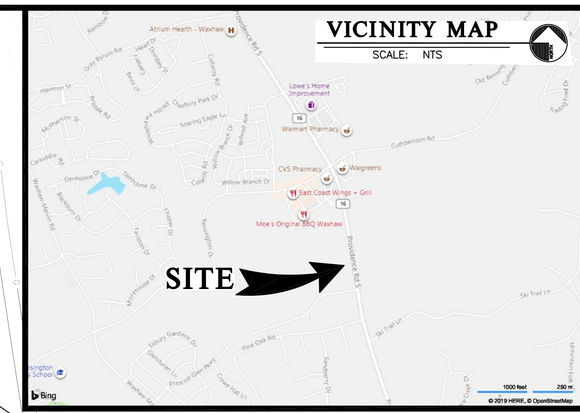


NOTE: PER THE APPROVED STORMWATER MANAGEMENT REPORT FOR OVERALL MASTER PLANNED "PRESCOT VILLAGE" DEVELOPMENT PROJECT THIS IS ALLOWED 80% IMPERIOUS AREA RATIO. THE EXISTING OFF-SITE MASTER WATER QUALITY POND, INSTALLED AS PART OF OVERALL PRESCOT VILLAGE DEVELOPMENT PROJECT, IS BEING USED TO MEET THE TOWN OF WAXHAW STORMWATER REQUIREMENTS FOR THIS SITE.

## LEGEND

| | |
|---|---|
| PROPERTY LINE | |
| ADJACENT PROPERTY LINE | |
| EASEMENT LINE | |
| SILT FENCE | |
| BUILDING SETBACK LINE | BSL |
| EXISTING CONTOUR LINE | 517 |
| FUTURE UNDERGROUND POWER LINE | UGP |
| SANITARY SEWER LINE | SS |
| STORM SEWER LINE | 18" RCP |
| IRON PIN FOUND (SIZE AND TYPE AS NOTED) | ● |
| STATE DOT MONUMENT | ■ |
| 1/2" REBAR W/ CAP SET | ○ |
| NAIL & DISK SET | △ |
| TRAFFIC SIGNAL JUNCTION BOX | SGL |
| WATER VALVE | ▽ |
| WATER METER | ⊖ |
| FIRE HYDRANT | ◯ |
| STORM MANHOLE | SDMH |
| DROP INLET | ▭ |
| SANITARY MANHOLE | SSMH |
| CLEANOUT | CO |
| SIGN | |
| FUTURE LIGHT POLE | ☼ |
| STREET ADDRESS | 1001 |
| CONCRETE | |
| GRAVEL | |
| SPOT ELEVATION | × 515.81 |


MDV Engineering P-0883
C/O Ayer Design Group
215 Johnston Street
Rock Hill, SC 29730
Phone: 704-400-1044
Email:michael@mdveng.com


NORTH CAROLINA PROFESSIONAL SEAL 28274 ENGINEER MICHAEL D. NEUMAN 7-1-20

PROJECT

Arby's

# RESTAURANT w/ DRIVE-THRU

#8821
1001 ASPINAL ST.
WAXHAW, NC 28173
(PROVIDENCE ROAD)

FOR

BRG Brumit Restaurant Group

BRUMIT RESTAURANT GROUP, LLC
P.O. BOX 15726
ASHEVILLE, NC 28813
PH: 828.274.5835

REVISIONS

DWG. NAME : 2020-104
DRAWN BY : MDN
DATE. : 5-26-20
SCALE: 1:20

## GRADING PLAN

C.2

**NOTES:**

*ALL "STD." NUMBERS REFER TO THE TOWN OF WAXHAW ENGINEERING DESIGN & CONSTRUCTION STANDARDS PROCEDURES MANUAL.*

1. ON-SITE BURIAL PITS REQUIRE AN ON-SITE DEMOLITION LANDFILL PERMIT FROM THE ZONING ADMINISTRATOR.
2. ANY GRADING BEYOND THE DENUDED LIMITS SHOWN ON THE PLAN IS A VIOLATION OF THE TOWN'S EROSION CONTROL ORDINANCE AND IS SUBJECT TO A FINE.
3. GRADING MORE THAN ONE ACRE WITHOUT AN APPROVED EROSION CONTROL PLAN IS A VIOLATION OF THE TOWN'S EROSION CONTROL ORDINANCE AND IS SUBJECT TO A FINE.
4. ALL PERIMETER DIKES, SWALES, DITCHES, PERIMETER SLOPES AND ALL SLOPES STEEPER THAN 3 HORIZONTAL TO 1 VERTICAL (3:1) SHALL BE PROVIDED TEMPORARY OR PERMANENT STABILIZATION WITH GROUND COVER AS SOON AS PRACTICABLE BUT IN ANY EVENT WITHIN 7 CALENDAR DAYS FROM THE LAST LAND-DISTURBING ACTIVITY.
5. ALL OTHER DISTURBED AREAS SHALL BE PROVIDED TEMPORARY OR PERMANENT STABILIZATION WITH GROUND COVER AS SOON AS PRACTICABLE BUT IN ANY EVENT WITHIN 14 CALENDAR DAYS FROM THE LAST LAND DISTURBING ACTIVITY.
6. ADDITIONAL MEASURES TO CONTROL EROSION AND SEDIMENT MAY BE REQUIRED BY A REPRESENTATIVE OF THE TOWN OF WAXHAW ENGINEERING DIVISION.
7. SLOPES SHALL BE GRADED NO STEEPER THAN 2:1. FILL SLOPES GREATER THAN 10'HIGH REQUIRE ADEQUATE TERRACING.
8. A GRADING PLAN MUST BE SUBMITTED FOR ANY LOT GRADING EXCEEDING ONE ACRE THAT WAS NOT PREVIOUSLY APPROVED.
9. DRIVEWAY PERMIT FOR CONSTRUCTION ENTRANCES IN NCDOT RIGHT OF WAY MUST BE PRESENTED AT PRE-CONSTRUCTION MEETING.
10. THE PRODOMINANT SOIL ON-SITE IS CHA: CHEWACLA SILT LOAM, 0 TO 2 PERCENT SLOPES, FREQUENTLY FLOODED.

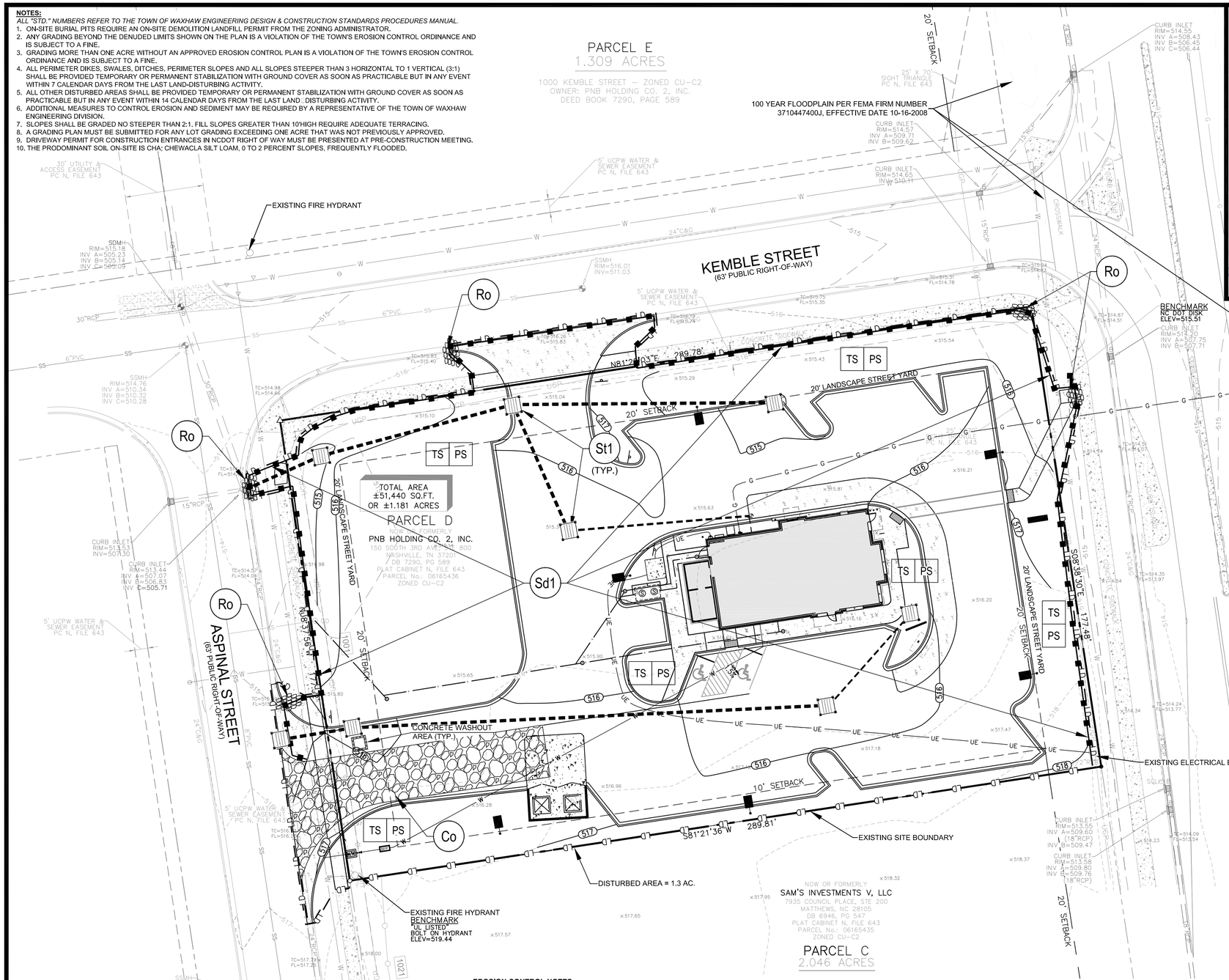


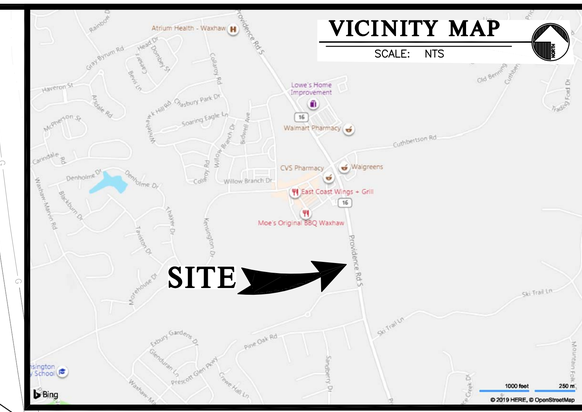


## STANDARD STRUCTURAL PRACTICES

| CODE | PRACTICE | STD DETAIL # | MAP SYMBOL | DESCRIPTION |
|---|---|---|---|---|
| Co | CONSTRUCTION EXIT | 514.1 | | A crushed stone pad located at the construction exit to provide a place for removing mud from tires thereby protecting public streets. |
| Sd1 | SEDIMENT BARRIER | 607.1 | | A temporary sediment control measure consisting of fabric buried at the bottom, stretched, and supported by posts. |
| St1 | TEMP. FABRIC DROP INLET PROTECTION | 512.1 & 519.1 | | Temporary fabric barrier placed around or in a drop inlet/catch basin. |
| Ro | SILT FENCE ROCK OUTLET | 509.1 | | Stone filter berm outlet located at the low point of the silt fence row |
| TS | DISTURBED AREA STABILIZATION (WITH TEMPORARY SEEDING) | 521.1 | TS | Establishing a temporary vegetative cover with fast growing seedings on disturbed areas. |
| PS | DISTURBED AREA STABILIZATION (WITH PERMANENT SEEDING) | | PS | Establishing permanent vegetative cover such as trees, shrubs, vines, sod, grasses or legumes on disturbed areas. |

**CONSTRUCTION SEQUENCE**

1. MAINTAIN EROSION CONTROL DEVICES FROM PREVIOUS PHASE (I.E. CONSTRUCTION ENTRANCE, SILT FENCE, INLET PROTECTION, ETC.).
2. CONTINUE GRADING AND START INSTALLING SITE IMPROVEMENTS AND BUILDING CONSTRUCTION.
3. INSTALL SILT FENCE, INLET PROTECTION, AND OTHER MEASURES AS SHOWN ON EROSION PLAN.
4. THE CONTRACTOR SHALL DILIGENTLY AND CONTINUOUSLY MAINTAIN ALL EROSION CONTROL DEVICES AND STRUCTURES.
5. FOR PHASED EROSION CONTROL PLANS, CONTRACTOR SHALL MEET WITH EROSION CONTROL INSPECTOR PRIOR TO COMMENCING WITH EACH PHASE OF EROSION CONTROL MEASURES.
6. STABILIZE SITE AS AREAS ARE BROUGHT TO FINISHED GRADE.
7. COORDINATE WITH EROSION CONTROL INSPECTOR PRIOR TO REMOVAL OF EROSION CONTROL MEASURE.
8. ALL EROSION CONTROL MEASURES SHALL BE CONSTRUCTED IN ACCORDANCE WITH THE N. C. EROSION AND SEDIMENT CONTROL PLANNING AND DESIGN MANUAL, U. S. DEPT. OF AGRICULTURE, TOWN OF WAXHAW EROSION CONTROL ORDINANCE.

0 10' 20' 40' 40'

SCALE: 1"= 20'

*LEGEND*

PROPERTY LINE
ADJACENT PROPERTY LINE
EASEMENT LINE
SILT FENCE
BUILDING SETBACK LINE — BSL
EXISTING CONTOUR LINE — 517
FUTURE UNDERGROUND POWER LINE — UGP
SANITARY SEWER LINE — SS
STORM SEWER LINE — 18" RCP
IRON PIN FOUND (SIZE AND TYPE AS NOTED)
STATE DOT MONUMENT
1/2" REBAR W/ CAP SET
NAIL & DISK SET
TRAFFIC SIGNAL JUNCTION BOX — SGL
WATER VALVE
WATER METER
FIRE HYDRANT
STORM MANHOLE — SDMH
DROP INLET
SANITARY MANHOLE — SSMH
CLEANOUT — CO
SIGN
FUTURE LIGHT POLE
STREET ADDRESS — 1001
CONCRETE
GRAVEL
SPOT ELEVATION — × 515.81

**EROSION CONTROL NOTES:**

1. IF DISTURBING LESS THAN 1 ACRE, ADD THIS NOTE: GROUND COVER ON EXPOSED SLOPES SHALL BE APPLIED WITHIN 14 WORKING DAYS FOLLOWING COMPLETION OF ANY PHASE OF GRADING. PERMANENT GROUND COVER FOR ALL DISTURBED AREAS SHALL BE APPLIED WITHIN 15 WORKING DAYS OR 60 CALENDAR DAYS, WHICHEVER IS SOONER. SLOPES LEFT EXPOSED WILL, WITHIN 14 CALENDAR DAYS OF COMPLETION OF ANY PHASE OF GRADING, BE PLANTED OR OTHERWISE PROVIDED WITH TEMPORARY OR PERMANENT GROUND COVER, DEVICES, OR STRUCTURES SUFFICIENT TO RESTRAIN EROSION.
2. IF DISTURBING 1 ACRE OR MORE, ADD THIS NOTE: AS REQUIRED BY THE NPDES GENERAL PERMIT NCG010000, ALL PERIMETER DIKES, SWALES, DITCHES, PERIMETER SLOPES AND ALL SLOPES STEEPER THAN 3 HORIZONTAL TO 1 VERTICAL (3:1) SHALL BE PROVIDED TEMPORARY OR PERMANENT STABILIZATION WITH GROUND COVER AS SOON AS PRACTICABLE BUT IN ANY EVENT WITHIN 7 CALENDAR DAYS FROM THE LAST LAND DISTURBING ACTIVITY. ALL OTHER DISTURBED AREAS SHALL BE PROVIDED TEMPORARY OR PERMANENT STABILIZATION WITH GROUND COVER AS SOON AS PRACTICABLE BUT IN ANY EVENT WITHIN 14 CALENDAR DAYS FROM THE LAST LAND DISTURBING ACTIVITY. GROUND STABILIZATION TIMEFRAME EXEMPTIONS CAN BE FOUND IN THE NPDES GENERAL PERMIT NCG010000 UNDER SECTION 2.B. GROUND STABILIZATION.
3. NO LAND DISTURBING ACTIVITY, EXCEPT THAT WHICH IS REQUIRED TO INSTALL EROSION CONTROL MEASURES, MAY COMMENCE PRIOR TO APPROVAL BY THE DIRECTOR OF DEVELOPMENT SERVICES.
4. ADDITIONAL EROSION CONTROL MEASURES MAY BE REQUIRED BASED UPON SPECIFIC SITE CONDITIONS.
5. CONTACT THE TOWN OF WAXHAW DEVELOPMENT SERVICES DEPARTMENT, AT 704-843-2195, FOR A PRE- CONSTRUCTION MEETING PRIOR TO ANY LAND DISTURBING ACTIVITY.
6. REMOVE ALL TEMPORARY EROSION CONTROL DEVICES AND STRUCTURES ONLY AFTER SITE IS FULLY STABILIZED AND APPROVAL HAS BEEN OBTAINED FROM THE TOWN OF WAXHAW DEVELOPMENT SERVICES DEPARTMENT.
7. ALL EROSION CONTROL DESIGNS SHALL BE IN ACCORDANCE WITH THE TOWN OF WAXHAW ENGINEERING, STANDARDS AND PROCEDURES MANUAL, AND THE NCDEQ EROSION AND SEDIMENTATION CONTROL PLANNING AND DESIGN MANUAL, LATEST EDITION.
8. FOR PHASED EROSION CONTROL PLANS, THE CONTRACTOR SHALL MEET WITH THE EROSION CONTROL SPECIALIST PRIOR TO COMMENCING EACH PHASE OF EROSION CONTROL MEASURES.
9. SITE GRADING IS TO BE COVERED UNDER THE GENERAL STORMWATER PERMIT NCG010000. ANY LAND DISTURBING ACTIVITY > 1 ACRE REQUIRES COMPLIANCE WITH ALL CONDITIONS OF THIS GENERAL PERMIT UNDER THE NPDES. ANY NONCOMPLIANCE IS A VIOLATION OF THE CLEAN WATER ACT AND MAY REQUIRE ENFORCEMENT BY NCDEQ.
10. CONTRACTOR IS TO KEEP STREET CLEAR OF MUD AND OTHER DEBRIS.
11. THE PROFESSIONAL ENGINEER REGISTERED WITH THE STATE OF NORTH CAROLINA WHO PREPARED THE EROSION CONTROL PLAN IS SOLELY RESPONSIBLE FOR IDENTIFICATION AND LOCATION OF ALL ENVIRONMENTAL WETLANDS, PERENNIAL AND INTERMITTENT STREAMS AND BUFFERS SHOWN ON THE PLANS.
12. THE TOWN OF WAXHAW IS NOT RESPONSIBLE FOR THE ACCURACY AND ADEQUACY OF THE DESIGN, DIMENSIONS, AND ELEVATIONS, WHICH SHALL BE CONFIRMED AND CORRELATED AT THE JOB SITE. THE TOWN OF WAXHAW, THROUGH THE APPROVAL OF THIS DOCUMENT, ASSUMES NO RESPONSIBILITY FOR THE COMPLETENESS AND/OR ACCURACY OF THIS DOCUMENT.
13. SILT SACKS WILL BE PLACED IN BASINS/INLETS ALONG ROADWAYS AFTER INITIAL ASPHALT SURFACE WORK IS COMPLETED.
14. THE FINANCIALLY RESPONSIBLE PARTY/AGENT OR THE LANDOWNER/AGENT OF A LAND DISTURBING ACTIVITY > ONE ACRE IS REQUIRED TO SELF-INSPECT THE PROJECT. A SELF INSPECTION, AS WELL AS DOCUMENTATION OF A PROJECT AFTER EACH PHASE OF THE PROJECT, IS REQUIRED.


MDV Engineering P-0883
C/O Ayer Design Group
215 Johnston Street
Rock Hill, SC 29730
Phone: 704-400-1044
Email:michael@mdveng.com


NORTH CAROLINA PROFESSIONAL SEAL 28274 7-1-20 ENGINEER MICHAEL D. NEUMANN

PROJECT

Arby's

# RESTAURANT w/ DRIVE-THRU

#8821
1001 ASPINAL ST.
WAXHAW, NC 28173
(PROVIDENCE ROAD)

FOR

BRG Brumit Restaurant Group

BRUMIT RESTAURANT GROUP, LLC
P.O. BOX 15726
ASHEVILLE, NC 28813
PH: 828.274.5835

REVISIONS

DWG. NAME : 2020-104
DRAWN BY : MDN
DATE. : 5-26-20
SCALE: 1:20

# EROSION CONTROL PHASE 2 PLAN

# C.3

NOTES:

1. A STABILIZED ENTRANCE PAD OF #5 WASHED STONE AND RAILROAD BALLAST SHALL BE LOCATED WHERE TRAFFIC WILL ENTER OR LEAVE THE CONSTRUCTION SITE ONTO A PUBLIC STREET.
2. FILTER FABRIC OR COMPACTED CRUSHER RUN STONE SHALL BE USED AS A BASE FOR THE CONSTRUCTION ENTRANCE.
3. THE ENTRANCE SHALL BE MAINTAINED IN A CONDITION WHICH WILL PREVENT TRACKING OR FLOWING OF SEDIMENT ONTO PUBLIC STREETS OR EXISTING PAVEMENT. THIS MAY REQUIRE PERIODIC TOP DRESSING WITH ADDITIONAL STONE AS CONDITIONS WARRANT AND REPAIR OR CLEANOUT OF ANY MEASURES USED TO TRAP SEDIMENT.
4. ANY SEDIMENT SPILLED, DROPPED, WASHED, OR TRACKED ONTO PUBLIC STREETS MUST BE REMOVED IMMEDIATELY.
5. WHEN APPROPRIATE, WHEELS MUST BE CLEANED TO REMOVE SEDIMENT PRIOR TO ENTERING A PUBLIC STREET. WHEN WASHING IS REQUIRED, IT SHALL BE DONE IN AN AREA STABILIZED WITH CRUSHED STONE WHICH DRAINS INTO AN APPROVED SEDIMENT BASIN SEE STD. NO. 515.1
6. THE TOWN MAY REQUIRE A STANDARD COMMERCIAL DRIVEWAY (STD. 108.1 & 109.1) TO ACCESS THE CONSTRUCTION SITE IF THE DRIVEWAY IS ON A THOROUGHFARE.

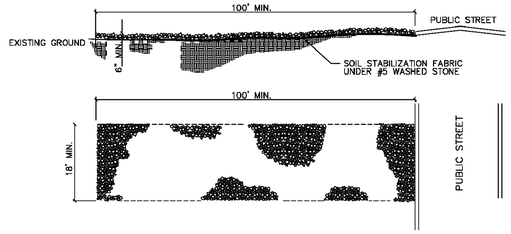


NOT TO SCALE

TOWN OF WAXHAW LAND DEVELOPMENT STANDARDS | STABILIZED CONSTRUCTION ENTRANCE | STD. NO. 514.1 | REV.

GENERAL NOTES:

1. UNIFORMLY GRADE A SHALLOW DEPRESSION APPROACHING THE INLET.
2. DRIVE 5-FOOT STEEL POSTS 2 FEET INTO THE GROUND SURROUNDING THE INLET. SPACE POSTS EVENLY AROUND THE PERIMETER OF THE INLET, A MAXIMUM OF 4 FEET APART.
3. SURROUND THE POSTS WITH WIRE MESH HARDWARE CLOTH. SECURE THE WIRE MESH TO THE STEEL POSTS AT THE TOP, MIDDLE, AND BOTTOM. PLACING A 2-FOOT FLAP OF THE WIRE MESH UNDER THE GRAVEL FOR ANCHORING IS RECOMMENDED.
4. PLACE CLEAN GRAVEL (NC DOT #5 OR #57 STONE) ON A 2:1 SLOPE WITH A HEIGHT OF 16 INCHES AROUND THE WIRE, AND SMOOTH TO AN EVEN GRADE.
5. ONCE THE CONTRIBUTING DRAINAGE AREA HAS BEEN STABILIZED, REMOVE ACCUMULATED SEDIMENT, AND ESTABLISH FINAL GRADING ELEVATIONS.
6. COMPACT THE AREA PROPERLY AND STABILIZED IT WITH GROUNDCOVER.

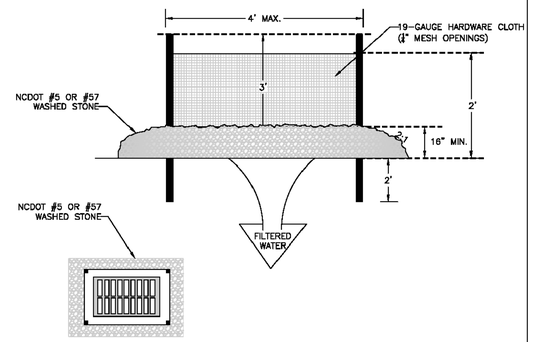


NOT TO SCALE

TOWN OF WAXHAW LAND DEVELOPMENT STANDARDS | HARDWARE CLOTH AND GRAVEL INLET PROTECTION | STD. NO. 512.1 | REV.

PS PERMANENT SEEDING

SEEDING MIXTURE

| SPECIES | RATE (LB/ACRE) |
|---|---|
| TALL FESCUE | 80 |
| SERICEA LESPEDEZA | 20 |
| KOBE LESPEDEZA | 10 |

SEEDING NOTES
1. AFTER AUG. 15 USE UNSCARIFIED SERICEA SEED.
2. WHERE PERIODIC MOWING IS PLANNED OR A NEAT APPEARANCE IS DESIRED, OMIT SERICEA AND INCREASE KOBE LESPEDEZA TO 40 LB/ACRE.
3. TO EXTEND SPRING SEEDING DATES INTO JUNE, ADD 15 LB/ACRE HULLED BERMUDAGRASS. HOWEVER, AFTER MID APR. IT IS PREFERABLE TO SEED TEMPORARY COVER.

NURSE PLANTS
BETWEEN MAY 1 AND AUG. 15, ADD 10 LB/ACRE GERMAN MILLET OR 15 LB/ACRE SUDANGRASS. PRIOR TO MAY 1 OR AFTER AUG. 15 ADD 40 LB/ACRE RYE (GRAIN).

SEEDING DATES

| | BEST | POSSIBLE |
|---|---|---|
| FALL: | AUG. 25–SEPT. 15 | AUG. 20–OCT. 25 |
| LATE WINTER: | FEB. 15–MAR. 21 | FEB. 1–APR. 15 |

FALL IS BEST FOR TALL FESCUE AND LATE WINTER FOR LESPEDEZAS. OVERSEEDING OF KOBE LESPEDEZA OVER FALL-SEEDED TALL FESCUE IS VERY EFFECTIVE.

SOIL AMENDMENTS
APPLY LIME AND FERTILIZER ACCORDING TO SOIL TESTS, OR APPLY 4,000 LB/ACRE GROUND AGRICULTURAL LIMESTONE AND 1,000 LB/ACRE 10–10–10 FERTILIZER.

MULCH
APPLY 4,000 LB/ACRE GRAIN STRAW OR EQUIVALENT COVER OF ANOTHER SUITABLE MULCH. ANCHOR STRAW BY TACKING WITH ASPHALT, NETTING, OR ROVING OR BY CRIMPING WITH A MULCH ANCHORING TOOL. A DISK WITH BLADES SET NEARLY STRAIGHT CAN BE USED AS A MULCH ANCHORING TOOL.

MAINTENANCE
REFERTILIZE IN THE SECOND YEAR UNLESS GROWTH IS FULLY ADEQUATE. MAY BE MOWED ONCE OR TWICE A YEAR, BUT MOWING IS NOT NECESSARY. RESEED, FERTILIZE, AND MULCH DAMAGED AREAS IMMEDIATELY.


MDV Engineering P-0883
C/O Ayer Design Group
215 Johnston Street
Rock Hill, SC 29730
Phone: 704-400-1044
Email:michael@mdveng.com


NORTH CAROLINA PROFESSIONAL SEAL 26274 ENGINEER MICHAEL D. NEUMANN 7-1-20

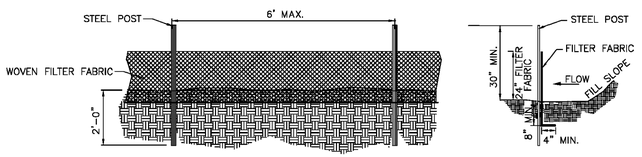


GENERAL NOTES:

1. WOVEN FILTER FABRIC BE USED WHERE SILT FENCE IS TO REMAIN FOR A PERIOD OF MORE THAN 30 DAYS.
2. STEEL POSTS SHALL BE 5'–0" IN HEIGHT AND BE OF THE SELF–FASTENER ANGLE STEEL TYPE.
3. TURN SILT FENCE UP SLOPE AT ENDS.
4. ORANGE SAFETY FENCE IS REQUIRED AT BACK OF SILT FENCE WHEN GRADING IS ADJACENT TO SWIM BUFFERS, STREAMS OR WETLANDS (REFER TO SWIM BUFFER GUIDELINES). THE COLOR ORANGE IS RESERVED FOR VISUAL IDENTIFICATION OF ENVIRONMENTALLY SENSITIVE AREAS.
5. DRAINAGE AREA CAN NOT BE GREATER THAN 1/4 ACRE PER 100 FT OF FENCE.
6. SLOPE LENGTHS CAN NOT EXCEED CRITERIA SHOWN IN TABLE 6.62A NORTH CAROLINA EROSION AND SEDIMENT CONTROL PLANNING AND DESIGN MANUAL.
7. DO NOT INSTALL SEDIMENT FENCE ACROSS STREAMS, DITCHES, WATERWAYS OR OTHER AREAS OF CONCENTRATED FLOW.

MAINTENANCE NOTES:

1. FILTER BARRIERS SHALL BE INSPECTED BY THE FINANCIALLY RESPONSIBLE PARTY OR HIS AGENT IMMEDIATELY AFTER EACH RAINFALL AND AT LEAST DAILY DURING PROLONGED RAINFALL. ANY REPAIRS NEEDED SHALL BE MADE IMMEDIATELY.
2. SHOULD THE FABRIC DECOMPOSE OR BECOME INEFFECTIVE PRIOR TO THE END OF THE EXPECTED USABLE LIFE AND THE BARRIER STILL IS NECESSARY, THE FABRIC SHALL BE REPLACED PROMPTLY.
3. SEDIMENT DEPOSITS SHOULD BE REMOVED WHEN DEPOSITS REACH APPROX. HALF THE HEIGHT OF THE BARRIER. ANY SEDIMENT DEPOSITS REMAINING IN PLACE AFTER THE SILT FENCE IS REMOVED SHALL BE DRESSED TO CONFORM TO THE EXISTING GRADE, PREPARED AND SEEDED.

NOT TO SCALE

TOWN OF WAXHAW LAND DEVELOPMENT STANDARDS | TEMPORARY SILT FENCE | STD. NO. 507.1 | REV.

NOTES:

1. INLET MAINTENANCE SHALL BE DOCUMENTED IN PROJECT LOG BOOK.
2. FILTER TYPES SHALL BE APPROVED BY THE TOWN INSPECTOR PRIOR TO INSTALLATION.
3. FILTER BAGS MAY BE REMOVED WHEN SITE IS STABILIZED AT THE DIRECTION OF THE ENGINEER.
4. FILTER BAGS SHALL BE REMOVED PRIOR TO STREET ACCEPTANCE AND/OR CLOSE OUT OF GRADING PERMIT.
5. FILTER BAGS SHALL BE CLEANED OR REPLACED ON A REGULAR BASIS (NOT BE MORE THAN HALF FULL AT ANY TIME).
6. FILTER BAGS MAY BE INSTALLED IN EXISTING TOWN OR NCDOT ROADS AS LONG AS STORM DRAINAGE IS NOT IMPEDED.

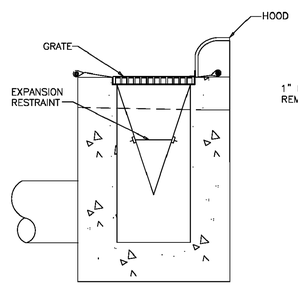


SECTION

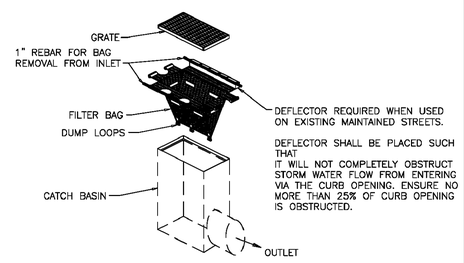


INSTALLATION

NOT TO SCALE

TOWN OF WAXHAW LAND DEVELOPMENT STANDARDS | CATCH BASIN INLET PROTECTION | STD. NO. 519.1 | REV.

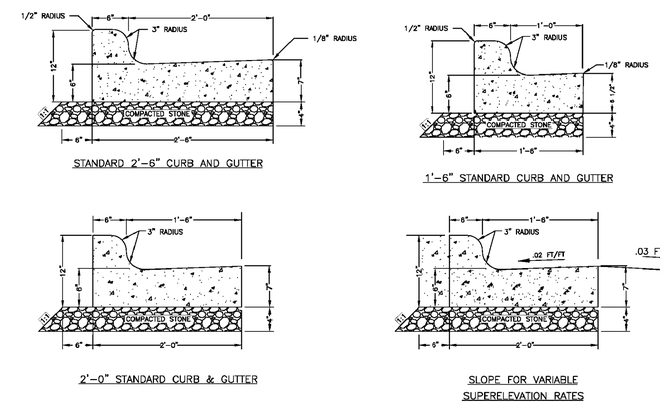


NOT TO SCALE

TOWN OF WAXHAW LAND DEVELOPMENT STANDARDS | STANDARD CURB AND GUTTER | STD. NO. 100.1 | REV.

PROJECT

Arby's

RESTAURANT w/ DRIVE-THRU

#8821
1001 ASPINAL ST.
WAXHAW, NC 28173
(PROVIDENCE ROAD)

FOR

BRG Brumit Restaurant Group

BRUMIT RESTAURANT GROUP, LLC
P.O. BOX 15726
ASHEVILLE, NC 28813
PH: 828.274.5835

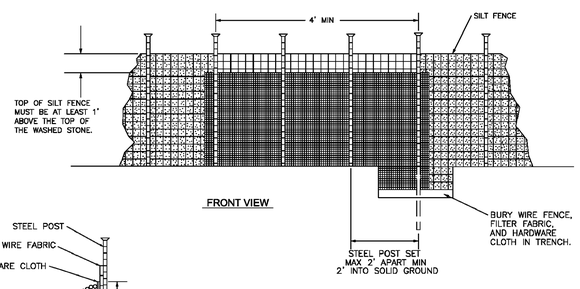


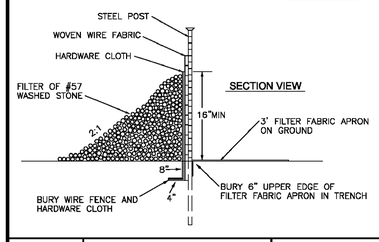


NOTES:
1. REMOVE SEDIMENT WHEN HALF OF STONE OUTLET IS COVERED.
2. REPLACE STONE AS NEEDED TO ENSURE DEWATERING.

NOT TO SCALE

TOWN OF WAXHAW LAND DEVELOPMENT STANDARDS | STANDARD SILT FENCE OUTLET | STD. NO. 509.1 | REV.

FOR LATE WINTER AND EARLY SPRING:

SEEDING MIXTURE:
RYE (GRAIN) – 120 LB/ACRE
ANNUAL LESPEDEZA (KOBE) – 50 LB/ACRE
(OMIT ANNUAL LESPEDEZA WHEN DURATION OF TEMPORARY COVER IS NOT TO EXTEND BEYOND JUNE)

SEEDING DATES:
JAN. 1 – MAY 1

SOIL AMENDMENTS:
FOLLOW RECOMMENDATIONS OF SOIL TESTS OR APPLY 2,000 LB/ACRE GROUND AGRICULTURAL LIMESTONE AND 750 LB/ACRE 10–10–10 FERTILIZER

MULCH:
APPLY 4,000 LB/ACRE STRAW. ANCHOR STRAW BY TACKING WITH ASPHALT, NETTING, OR A MULCH ANCHORING TOOL. A DISK WITH BLADES SET NEARLY STRAIGHT CAN BE USED AS A MULCH ANCHORING TOOL

MAINTENANCE:
REFERTILIZE IF GROWTH IS NOT FULLY ADEQUATE. RESEED, FERTILIZE AND MULCH IMMEDIATELY FOLLOWING EROSION OR OTHER DAMAGE

FOR SUMMER:

SEEDING MIXTURE:
GERMAN MILLET – 40 LB/ACRE
(A SMALL–STEMMED SUDANGRASS MAY BE SUBSTITUTED AT A RATE OF 50 LB/ACRE)

SEEDING DATES:
MAY 1 – AUG. 15

SOIL AMENDMENTS:
FOLLOW RECOMMENDATIONS OF SOIL TESTS OR APPLY 2,000 LB/ACRE GROUND AGRICULTURAL LIMESTONE AND 750 LB/ACRE 10–10–10 FERTILIZER

MULCH:
APPLY 4,000 LB/ACRE STRAW. ANCHOR STRAW BY TACKING WITH ASPHALT, NETTING, OR A MULCH ANCHORING TOOL. A DISK WITH BLADES SET NEARLY STRAIGHT CAN BE USED AS A MULCH ANCHORING TOOL

MAINTENANCE:
REFERTILIZE IF GROWTH IS NOT FULLY ADEQUATE. RESEED, FERTILIZE AND MULCH IMMEDIATELY FOLLOWING EROSION OR OTHER DAMAGE

FOR FALL:

SEEDING MIXTURE:
RYE (GRAIN) – 120 LB/ACRE

SEEDING DATES:
AUG. 15 – DEC 30

SOIL AMENDMENTS:
FOLLOW RECOMMENDATIONS OF SOIL TESTS OR APPLY 2,000 LB/ACRE GROUND AGRICULTURAL LIMESTONE AND 1,000 LB/ACRE 10–10–10 FERTILIZER

MULCH:
APPLY 4,000 LB/ACRE STRAW. ANCHOR STRAW BY TACKING WITH ASPHALT, NETTING, OR A MULCH ANCHORING TOOL. A DISK WITH BLADES SET NEARLY STRAIGHT CAN BE USED AS A MULCH ANCHORING TOOL

MAINTENANCE:
REPAIR AND REFERTILIZE DAMAGED AREAS IMMEDIATELY. TOPDRESS WITH 50 LB/ACRE OF NITROGEN IN MARCH. IF IT IS NECESSARY TO EXTEND TEMPORARY COVER BEYOND JUNE 15, OVERSEED WITH 50 LB/ACRE KOBE LESPEDEZA IN LATE FEBRUARY OR EARLY MARCH.

FOR ADDITIONAL INFORMATION, REFER TO NCDEQ EROSION AND SEDIMENT CONTROL PLANNING AND DESIGN MANUAL (ESCPDM), SECTION 6.10. FOR PERMANENT SEEDING SPECIFICATIONS, INCLUDING SEED BED PREP, SEASONAL LIMITATIONS FOR SEEDING OPERATIONS, THE KINDS OF GRADES OF FERTILIZERS, THE KINDS OF SEED, AND THE RATES OF APPLICATION OF LIMESTONE, FERTILIZER, AND SEED, REFER TO NCDEQ ESCPDM SECTION 6.11.

TOWN OF WAXHAW LAND DEVELOPMENT STANDARDS | TEMPORARY SEEDING SCHEDULE | STD. NO. 521.1 | REV.

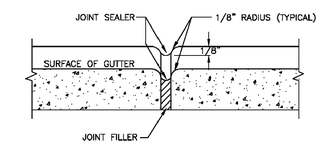


TRANSVERSE EXPANSION JOINT

NOTES:

1. CONTRACTION JOINTS SHALL BE SPACED AT 10–FOOT INTERVALS. FOR VALLEY GUTTER, A 15–FOOT SPACING MAY BE USED WHEN A MACHINE IS USED. JOINT SPACING MAY BE ALTERED BY THE TOWN ENGINEER TO PREVENT UNCONTROLLED CRACKING.
2. CONTRACTION JOINTS MAY BE INSTALLED BY THE USE OF TEMPLATES OR FORMED BY OTHER APPROVED METHODS. WHERE SUCH JOINTS ARE NOT FORMED BY TEMPLATES, A MINIMUM DEPTH OF 1 1/2" SHALL BE OBTAINED.
3. ALL EXPANSION JOINTS SHALL BE SPACED AT 90–FOOT INTERVALS, AND ADJACENT TO ALL RIGID OBJECTS. JOINTS SHALL MATCH LOCATIONS WITH JOINTS IN ABUTTING SIDEWALK.
4. CONCRETE COMPRESSIVE STRENGTH SHALL BE 3600 P.S.I. IN 28 DAYS WITH A 4–INCH SLUMP.
5. CURB SHALL BE DEPRESSED AT INTERSECTIONS TO PROVIDE FOR FUTURE ACCESSIBLE RAMPS.
6. TOP 6" OF SUBGRADE BENEATH THE CURB AND GUTTER SHALL BE COMPACTED TO 100% STANDARD PROCTOR DENSITY.
7. SEE ALSO 106.1

NOT TO SCALE

TOWN OF WAXHAW LAND DEVELOPMENT STANDARDS | TRANSVERSE EXPANSION JOINT | STD. NO. 102.1 | REV. 8/19

REVISIONS

DWG. NAME : 2020–104
DRAWN BY : MDN
DATE. : 5–26–20
SCALE: N.T.S

DETAIL SHEET

C.4

**GROUND STABILIZATION AND MATERIALS HANDLING PRACTICES FOR COMPLIANCE WITH THE NCG01 CONSTRUCTION GENERAL PERMIT**

Implementing the details and specifications on this plan sheet will result in the construction activity being considered compliant with the Ground Stabilization and Materials Handling sections of the NCG01 Construction General Permit (Sections E and F, respectively). The permittee shall comply with the Erosion and Sediment Control plan approved by the delegated authority having jurisdiction. All details and specifications shown on this sheet may not apply depending on site conditions and the delegated authority having jurisdiction.

**SECTION E: GROUND STABILIZATION**

**Required Ground Stabilization Timeframes**

| Site Area Description | Stabilize within this many calendar days after ceasing land disturbance | Timeframe variations |
|---|---|---|
| (a) Perimeter dikes, swales, ditches, and perimeter slopes | 7 | None |
| (b) High Quality Water (HQW) Zones | 7 | None |
| (c) Slopes steeper than 3:1 | 7 | If slopes are 10' or less in length and are not steeper than 2:1, 14 days are allowed |
| (d) Slopes 3:1 to 4:1 | 14 | -7 days for slopes greater than 50' in length and with slopes steeper than 4:1<br>-7 days for perimeter dikes, swales, ditches, perimeter slopes and HQW Zones<br>-10 days for Falls Lake Watershed |
| (e) Areas with slopes flatter than 4:1 | 14 | -7 days for perimeter dikes, swales, ditches, perimeter slopes and HQW Zones<br>-10 days for Falls Lake Watershed unless there is zero slope |

**Note:** After the permanent cessation of construction activities, any areas with temporary ground stabilization shall be converted to permanent ground stabilization as soon as practicable but in no case longer than 90 calendar days after the last land disturbing activity. Temporary ground stabilization shall be maintained in a manner to render the surface stable against accelerated erosion until permanent ground stabilization is achieved.

**GROUND STABILIZATION SPECIFICATION**

Stabilize the ground sufficiently so that rain will not dislodge the soil. Use one of the techniques in the table below:

| Temporary Stabilization | Permanent Stabilization |
|---|---|
| • Temporary grass seed covered with straw or other mulches and tackifiers<br>• Hydroseeding<br>• Rolled erosion control products with or without temporary grass seed<br>• Appropriately applied straw or other mulch<br>• Plastic sheeting | • Permanent grass seed covered with straw or other mulches and tackifiers<br>• Geotextile fabrics such as permanent soil reinforcement matting<br>• Hydroseeding<br>• Shrubs or other permanent plantings covered with mulch<br>• Uniform and evenly distributed ground cover sufficient to restrain erosion<br>• Structural methods such as concrete, asphalt or retaining walls<br>• Rolled erosion control products with grass seed |

**POLYACRYLAMIDES (PAMS) AND FLOCCULANTS**

1. Select flocculants that are appropriate for the soils being exposed during construction, selecting from the *NC DWR List of Approved PAMS/Flocculants*.
2. Apply flocculants at or before the inlets to Erosion and Sediment Control Measures.
3. Apply flocculants at the concentrations specified in the *NC DWR List of Approved PAMS/Flocculants* and in accordance with the manufacturer's instructions.
4. Provide ponding area for containment of treated Stormwater before discharging offsite.
5. Store flocculants in leak-proof containers that are kept under storm-resistant cover or surrounded by secondary containment structures.

**EQUIPMENT AND VEHICLE MAINTENANCE**

1. Maintain vehicles and equipment to prevent discharge of fluids.
2. Provide drip pans under any stored equipment.
3. Identify leaks and repair as soon as feasible, or remove leaking equipment from the project.
4. Collect all spent fluids, store in separate containers and properly dispose as hazardous waste (recycle when possible).
5. Remove leaking vehicles and construction equipment from service until the problem has been corrected.
6. Bring used fuels, lubricants, coolants, hydraulic fluids and other petroleum products to a recycling or disposal center that handles these materials.

**LITTER, BUILDING MATERIAL AND LAND CLEARING WASTE**

1. Never bury or burn waste. Place litter and debris in approved waste containers.
2. Provide a sufficient number and size of waste containers (e.g dumpster, trash receptacle) on site to contain construction and domestic wastes.
3. Locate waste containers at least 50 feet away from storm drain inlets and surface waters unless no other alternatives are reasonably available.
4. Locate waste containers on areas that do not receive substantial amounts of runoff from upland areas and does not drain directly to a storm drain, stream or wetland.
5. Cover waste containers at the end of each workday and before storm events or provide secondary containment. Repair or replace damaged waste containers.
6. Anchor all lightweight items in waste containers during times of high winds.
7. Empty waste containers as needed to prevent overflow. Clean up immediately if containers overflow.
8. Dispose waste off-site at an approved disposal facility.
9. On business days, clean up and dispose of waste in designated waste containers.

**PAINT AND OTHER LIQUID WASTE**

1. Do not dump paint and other liquid waste into storm drains, streams or wetlands.
2. Locate paint washouts at least 50 feet away from storm drain inlets and surface waters unless no other alternatives are reasonably available.
3. Contain liquid wastes in a controlled area.
4. Containment must be labeled, sized and placed appropriately for the needs of site.
5. Prevent the discharge of soaps, solvents, detergents and other liquid wastes from construction sites.

**PORTABLE TOILETS**

1. Install portable toilets on level ground, at least 50 feet away from storm drains, streams or wetlands unless there is no alternative reasonably available. If 50 foot offset is not attainable, provide relocation of portable toilet behind silt fence or place on a gravel pad and surround with sand bags.
2. Provide staking or anchoring of portable toilets during periods of high winds or in high foot traffic areas.
3. Monitor portable toilets for leaking and properly dispose of any leaked material. Utilize a licensed sanitary waste hauler to remove leaking portable toilets and replace with properly operating unit.

**EARTHEN STOCKPILE MANAGEMENT**

1. Show stockpile locations on plans. Locate earthen-material stockpile areas at least 50 feet away from storm drain inlets, sediment basins, perimeter sediment controls and surface waters unless it can be shown no other alternatives are reasonably available.
2. Protect stockpile with silt fence installed along toe of slope with a minimum offset of five feet from the toe of stockpile.
3. Provide stable stone access point when feasible.
4. Stabilize stockpile within the timeframes provided on this sheet and in accordance with the approved plan and any additional requirements. Soil stabilization is defined as vegetative, physical or chemical coverage techniques that will restrain accelerated erosion on disturbed soils for temporary or permanent control needs.

NORTH CAROLINA *Environmental Quality*

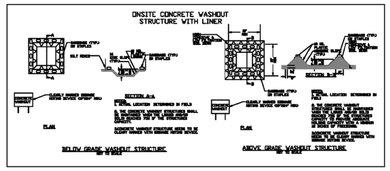


**CONCRETE WASHOUTS**

1. Do not discharge concrete or cement slurry from the site.
2. Dispose of, or recycle settled, hardened concrete residue in accordance with local and state solid waste regulations and at an approved facility.
3. Manage washout from mortar mixers in accordance with the above item and in addition place the mixer and associated materials on impervious barrier and within lot perimeter silt fence.
4. Install temporary concrete washouts per local requirements, where applicable. If an alternate method or product is to be used, contact your approval authority for review and approval. If local standard details are not available, use one of the two types of temporary concrete washouts provided on this detail.
5. Do not use concrete washouts for dewatering or storing defective curb or sidewalk sections. Stormwater accumulated within the washout may not be pumped into or discharged to the storm drain system or receiving surface waters. Liquid waste must be pumped out and removed from project.
6. Locate washouts at least 50 feet from storm drain inlets and surface waters unless it can be shown that no other alternatives are reasonably available. At a minimum, install protection of storm drain inlet(s) closest to the washout which could receive spills or overflow.
7. Locate washouts in an easily accessible area, on level ground and install a stone entrance pad in front of the washout. Additional controls may be required by the approving authority.
8. Install at least one sign directing concrete trucks to the washout within the project limits. Post signage on the washout itself to identify this location.
9. Remove leavings from the washout when at approximately 75% capacity to limit overflow events. Replace the tarp, sand bags or other temporary structural components when no longer functional. When utilizing alternative or proprietary products, follow manufacturer's instructions.
10. At the completion of the concrete work, remove remaining leavings and dispose of in an approved disposal facility. Fill pit, if applicable, and stabilize any disturbance caused by removal of washout.

**HERBICIDES, PESTICIDES AND RODENTICIDES**

1. Store and apply herbicides, pesticides and rodenticides in accordance with label restrictions.
2. Store herbicides, pesticides and rodenticides in their original containers with the label, which lists directions for use, ingredients and first aid steps in case of accidental poisoning.
3. Do not store herbicides, pesticides and rodenticides in areas where flooding is possible or where they may spill or leak into wells, stormwater drains, ground water or surface water. If a spill occurs, clean area immediately.
4. Do not stockpile these materials onsite.

**HAZARDOUS AND TOXIC WASTE**

1. Create designated hazardous waste collection areas on-site.
2. Place hazardous waste containers under cover or in secondary containment.
3. Do not store hazardous chemicals, drums or bagged materials directly on the ground.

# NCG01 GROUND STABILIZATION AND MATERIALS HANDLING

EFFECTIVE: 04/01/19

**PART III**
**SELF-INSPECTION, RECORDKEEPING AND REPORTING**

**SECTION A: SELF-INSPECTION**

Self-inspections are required during normal business hours in accordance with the table below. When adverse weather or site conditions would cause the safety of the inspection personnel to be in jeopardy, the inspection may be delayed until the next business day on which it is safe to perform the inspection. In addition, when a storm event of equal to or greater than 1.0 inch occurs outside of normal business hours, the self-inspection shall be performed upon the commencement of the next business day. Any time when inspections were delayed shall be noted in the Inspection Record.

| Inspect | Frequency (during normal business hours) | Inspection records must include: |
|---|---|---|
| (1) Rain gauge maintained in good working order | Daily | Daily rainfall amounts.<br>If no daily rain gauge observations are made during weekend or holiday periods, and no individual-day rainfall information is available, record the cumulative rain measurement for those un-attended days (and this will determine if a site inspection is needed). Days on which no rainfall occurred shall be recorded as "zero." The permittee may use another rain-monitoring device approved by the Division. |
| (2) EBSC Measures | At least once per 7 calendar days and within 24 hours of a rain event ≥ 1.0 inch in 24 hours | 1. Identification of the measures inspected,<br>2. Date and time of the inspection,<br>3. Name of the person performing the inspection,<br>4. Indication of whether the measures were operating properly,<br>5. Description of maintenance needs for the measure,<br>6. Description, evidence, and date of corrective actions taken. |
| (3) Stormwater discharge outfalls (SDOs) | At least once per 7 calendar days and within 24 hours of a rain event ≥ 1.0 inch in 24 hours | 1. Identification of the discharge outfalls inspected,<br>2. Date and time of the inspection,<br>3. Name of the person performing the inspection,<br>4. Evidence of indicators of stormwater pollution such as oil sheen, floating or suspended solids or discoloration,<br>5. Indication of visible sediment leaving the site,<br>6. Description, evidence, and date of corrective actions taken. |
| (4) Perimeter of site | At least once per 7 calendar days and within 24 hours of a rain event ≥ 1.0 inch in 24 hours | If visible sedimentation is found outside site limits, then a record of the following shall be made:<br>1. Actions taken to clean up or stabilize the sediment that has left the site limits,<br>2. Description, evidence, and date of corrective actions taken, and<br>3. An explanation as to the actions taken to control future releases. |
| (5) Streams or wetlands onsite or offsite (where accessible) | At least once per 7 calendar days and within 24 hours of a rain event ≥ 1.0 inch in 24 hours | If the stream or wetland has increased visible sedimentation or a stream has visible increased turbidity from the construction activity, then a record of the following shall be made:<br>1. Description, evidence and date of corrective actions taken, and<br>2. Records of the required reports to the appropriate Division Regional Office per Part III, Section C, Item (2)(a) of this permit of this permit. |
| (6) Ground stabilization measures | After each phase of grading | 1. The phase of grading (installation of perimeter EBSC measures, clearing and grubbing, installation of storm drainage facilities, completion of all land-disturbing activity, construction or redevelopment, permanent ground cover).<br>2. Documentation that the required ground stabilization measures have been provided within the required timeframe or an assurance that they will be provided as soon as possible. |

NOTE: The rain inspection resets the required 7 calendar day inspection requirement.

**PART III**
**SELF-INSPECTION, RECORDKEEPING AND REPORTING**

**SECTION B: RECORDKEEPING**

**1. E&SC Plan Documentation**

The approved E&SC plan as well as any approved deviation shall be kept on the site. The approved E&SC plan must be kept up-to-date throughout the coverage under this permit. The following items pertaining to the E&SC plan shall be documented in the manner described:

| Item to Document | Documentation Requirements |
|---|---|
| (a) Each E&SC Measure has been installed and does not significantly deviate from the locations, dimensions and relative elevations shown on the approved E&SC Plan. | Initial and date each E&SC Measure on a copy of the approved E&SC Plan or complete, date and sign an inspection report that lists each E&SC Measure shown on the approved E&SC Plan. This documentation is required upon the initial installation of the E&SC Measures or if the E&SC Measures are modified after initial installation. |
| (b) A phase of grading has been completed. | Initial and date a copy of the approved E&SC Plan or complete, date and sign an inspection report to indicate completion of the construction phase. |
| (c) Ground cover is located and installed in accordance with the approved E&SC Plan | Initial and date a copy of the approved E&SC Plan or complete, date and sign an inspection report to indicate compliance with approved ground cover specifications. |
| (d) The maintenance and repair requirements for all E&SC Measures have been performed. | Complete, date and sign an inspection report. |
| (e) Corrective actions have been taken to E&SC Measures. | Initial and date a copy of the approved E&SC Plan or complete, date and sign an inspection report to indicate the completion of the corrective action. |

**2. Additional Documentation**

In addition to the E&SC Plan documents above, the following items shall be kept on the site

and available for agency inspectors at all times during normal business hours, unless the Division provides a site-specific exemption based on unique site conditions that make this requirement not practical:

(a) This general permit as well as the certificate of coverage, after it is received.

(b) Records of inspections made during the previous 30 days. The permittee shall record the required observations on the Inspection Record Form provided by the Division or a similar inspection form that includes all the required elements. Use of electronically-available records in lieu of the required paper copies will be allowed if shown to provide equal access and utility as the hard-copy records.

(c) All data used to complete the Notice of Intent and older inspection records shall be maintained for a period of three years after project completion and made available upon request. [40 CFR 122.41]

**PART III**
**SELF-INSPECTION, RECORDKEEPING AND REPORTING**

**SECTION C: REPORTING**

**1. Occurrences that must be reported**

Permittees shall report the following occurrences:

(a) Visible sediment deposition in a stream or wetland.

(b) Oil spills if:
- They are 25 gallons or more,
- They are less than 25 gallons but cannot be cleaned up within 24 hours,
- They cause sheen on surface waters (regardless of volume), or
- They are within 100 feet of surface waters (regardless of volume).

(a) Releases of hazardous substances in excess of reportable quantities under Section 311 of the Clean Water Act (Ref: 40 CFR 110.3 and 40 CFR 117.3) or Section 102 of CERCLA (Ref: 40 CFR 302.4) or G.S. 143-215.85.

(b) Anticipated bypasses and unanticipated bypasses.

(c) Noncompliance with the conditions of this permit that may endanger health or the environment.

**2. Reporting Timeframes and Other Requirements**

After a permittee becomes aware of an occurrence that must be reported, he shall contact the appropriate Division regional office within the timeframes and in accordance with the other requirements listed below. Occurrences outside normal business hours may also be reported to the Division's Emergency Response personnel at (800) 662-7956, (800) 858-0368 or (919) 733-3300.

| Occurrence | Reporting Timeframes (After Discovery) and Other Requirements |
|---|---|
| (a) Visible sediment deposition in a stream or wetland | • ***Within 24 hours***, an oral or electronic notification.<br>• ***Within 7 calendar days***, a report that contains a description of the sediment and actions taken to address the cause of the deposition. Division staff may waive the requirement for a written report on a case-by-case basis.<br>• If the stream is named on the NC 303(d) list as impaired for sediment-related causes, the permittee may be required to perform additional monitoring, inspections or apply more stringent practices if staff determine that additional requirements are needed to assure compliance with the federal or state impaired-waters conditions. |
| (b) Oil spills and release of hazardous substances per Item 1(b)-(c) above | • ***Within 24 hours***, an oral or electronic notification. The notification shall include information about the date, time, nature, volume and location of the spill or release. |
| (c) Anticipated bypasses [40 CFR 122.41(m)(3)] | • ***A report at least ten days before the date of the bypass, if possible***. The report shall include an evaluation of the anticipated quality and effect of the bypass. |
| (d) Unanticipated bypasses [40 CFR 122.41(m)(3)] | • ***Within 24 hours***, an oral or electronic notification.<br>• ***Within 7 calendar days***, a report that includes an evaluation of the quality and effect of the bypass. |
| (e) Noncompliance with the conditions of this permit that may endanger health or the environment[40 CFR 122.41(l)(7)] | • ***Within 24 hours***, an oral or electronic notification.<br>• ***Within 7 calendar days***, a report that contains a description of the noncompliance, and its causes; the period of noncompliance, including exact dates and times, and if the noncompliance has not been corrected, the anticipated time noncompliance is expected to continue; and steps taken or planned to reduce, eliminate, and prevent reoccurrence of the noncompliance. [40 CFR 122.41(l)(6).<br>• Division staff may waive the requirement for a written report on a case-by-case basis. |

NORTH CAROLINA *Environmental Quality*

# NCG01 SELF-INSPECTION, RECORDKEEPING AND REPORTING

EFFECTIVE: 04/01/19

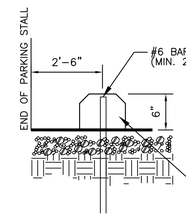


CONCRETE WHEELSTOP

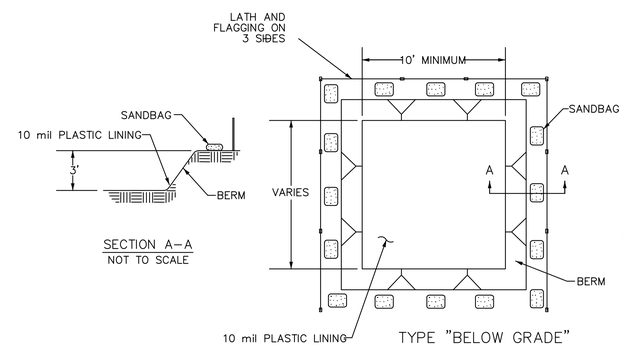


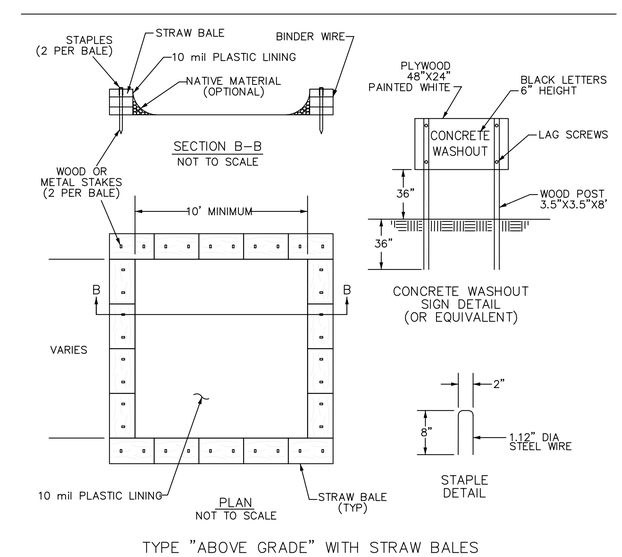


**CONCRETE WASHOUT AREA**

- Please show a Concrete Washout area, provide details and place notes below with detail provided. Do not locate containment areas or devices where accidental release of the contained liquid can threaten health or safety, or discharge to water bodies, channel, or storm drains. Temporary concrete washout facilities should be located a minimum of 50 feet from storm drain inlets, open drainage facilities, and watercourses, unless determined infeasible by the Engineer or CRM. Each facility should be located away from construction traffic or access areas to prevent disturbance or tracking.

**ONSITE TEMPORARY CONCRETE WASHOUT FACILITY, CONCRETE TRANSIT TRUCK WASHOUT PROCEDURES**

- Temporary concrete washout facilities should be located a minimum of 50 feet from storm drain inlets, open drainage facilities, and watercourses, unless determined infeasible by the Engineer or CRM. Each facility should be located away from construction traffic or access areas to prevent disturbance or tracking.
- Install a sign adjacent to each washout facility to inform concrete equipment operators to utilize the proper facilities.
- Temporary concrete washout facilities should be constructed above grade or below grade at the option of the Contractor. Temporary concrete washout facilities should be constructed and maintained in sufficient quantity and size to contain all liquid and concrete waste generated by washout operations.
- Temporary washout facilities should have a temporary pit or bermed areas of sufficient volume to completely contain all liquid and waste concrete materials generated during washout procedures.
- Perform washout of concrete mixer trucks in designated areas only. Washout may be collected in an impermeable bag for disposal. See also *Concrete Truck Washout*.
- Once concrete wastes are washed into the designated area and allowed to harden, the concrete should be broken up, removed, and disposed of per *Solid Waste Management*.

**INSPECTION AND MAINTENANCE**

- The Engineer or CRM should monitor on site concrete waste storage and disposal procedures at least weekly.
- The Engineer or CRM should monitor concrete working tasks, such as saw cutting, coring, grinding and grooving daily to ensure proper methods are employed.
- Temporary concrete washout facilities should be maintained to provide adequate holding capacity with a minimum freeboard of 4-inches for above grade facilities and 12-inches for below grade facilities. Maintaining temporary concrete washout facilities should include removing and disposing of hardened concrete and returning the facilities to a functional condition.
- Existing facilities should be cleaned, or new facilities should be constructed and ready for use once the washout is 75% full.
- Temporary concrete washout facilities should be inspected for damage (i.e., tears in PVC liner, missing sandbags, etc.). Damaged facilities should be repaired immediately

CONCRETE WASHOUT DETAIL & NOTES


MDV Engineering P-0883
C/O Ayer Design Group
215 Johnston Street
Rock Hill, SC 29730
Phone: 704-400-1044
Email:michael@mdveng.com


NORTH CAROLINA PROFESSIONAL SEAL 28274 ENGINEER MICHAEL D. NEUMANN 7-1-20

PROJECT

Arby's

RESTAURANT w/ DRIVE-THRU

#8821
1001 ASPINAL ST.
WAXHAW, NC 28173
(PROVIDENCE ROAD)

FOR

BRG Brumit Restaurant Group

BRUMIT RESTAURANT GROUP, LLC
P.O. BOX 15726
ASHEVILLE, NC 28813
PH: 828.274.5835

REVISIONS

DWG. NAME : 2020-104
DRAWN BY : MDN
DATE. : 5-26-20
SCALE: N.T.S

**DETAIL SHEET**

C.5

# 840.03 — ENGLISH STANDARD DRAWING FOR FRAME, GRATES, AND HOOD FOR USE ON STANDARD CATCH BASIN (SHEET 1 OF 2)

STATE OF NORTH CAROLINA DEPT. OF TRANSPORTATION DIVISION OF HIGHWAYS RALEIGH, N.C. 1-12

NOTE: USE TYPE "E", "F" AND "G" GRATE UNLESS OTHERWISE NOTED.

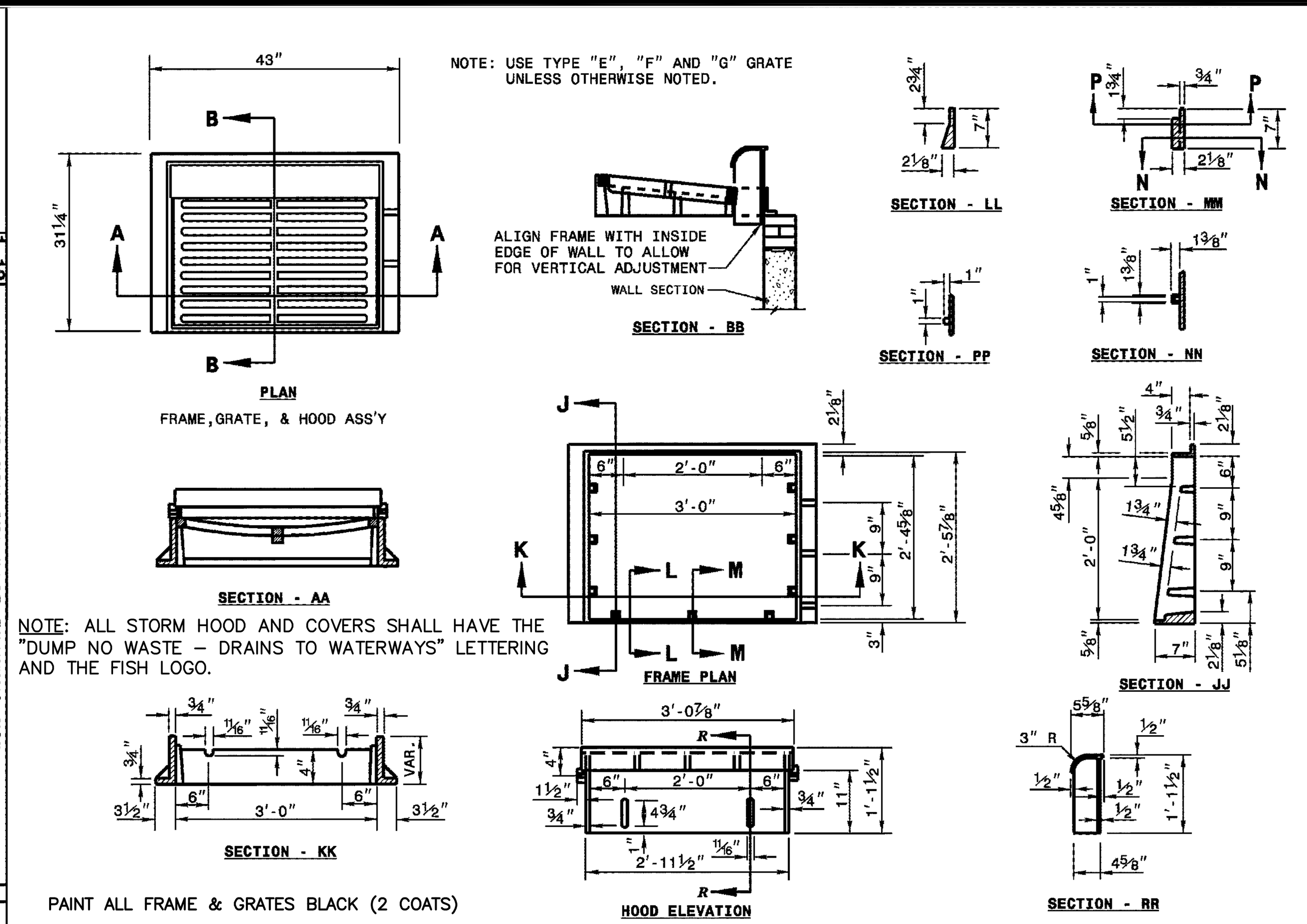


NOTE: ALL STORM HOOD AND COVERS SHALL HAVE THE "DUMP NO WASTE – DRAINS TO WATERWAYS" LETTERING AND THE FISH LOGO.

PAINT ALL FRAME & GRATES BLACK (2 COATS)

SHEET 1 OF 2 840.03

# 840.03 — ENGLISH STANDARD DRAWING FOR FRAME, GRATES, AND HOOD FOR USE ON STANDARD CATCH BASIN (SHEET 2 OF 2)

STATE OF NORTH CAROLINA DEPT. OF TRANSPORTATION DIVISION OF HIGHWAYS RALEIGH, N.C. 1-12

DETAIL SHOWING TYPES OF GRATES USE ACCORDING TO WATER FLOW.

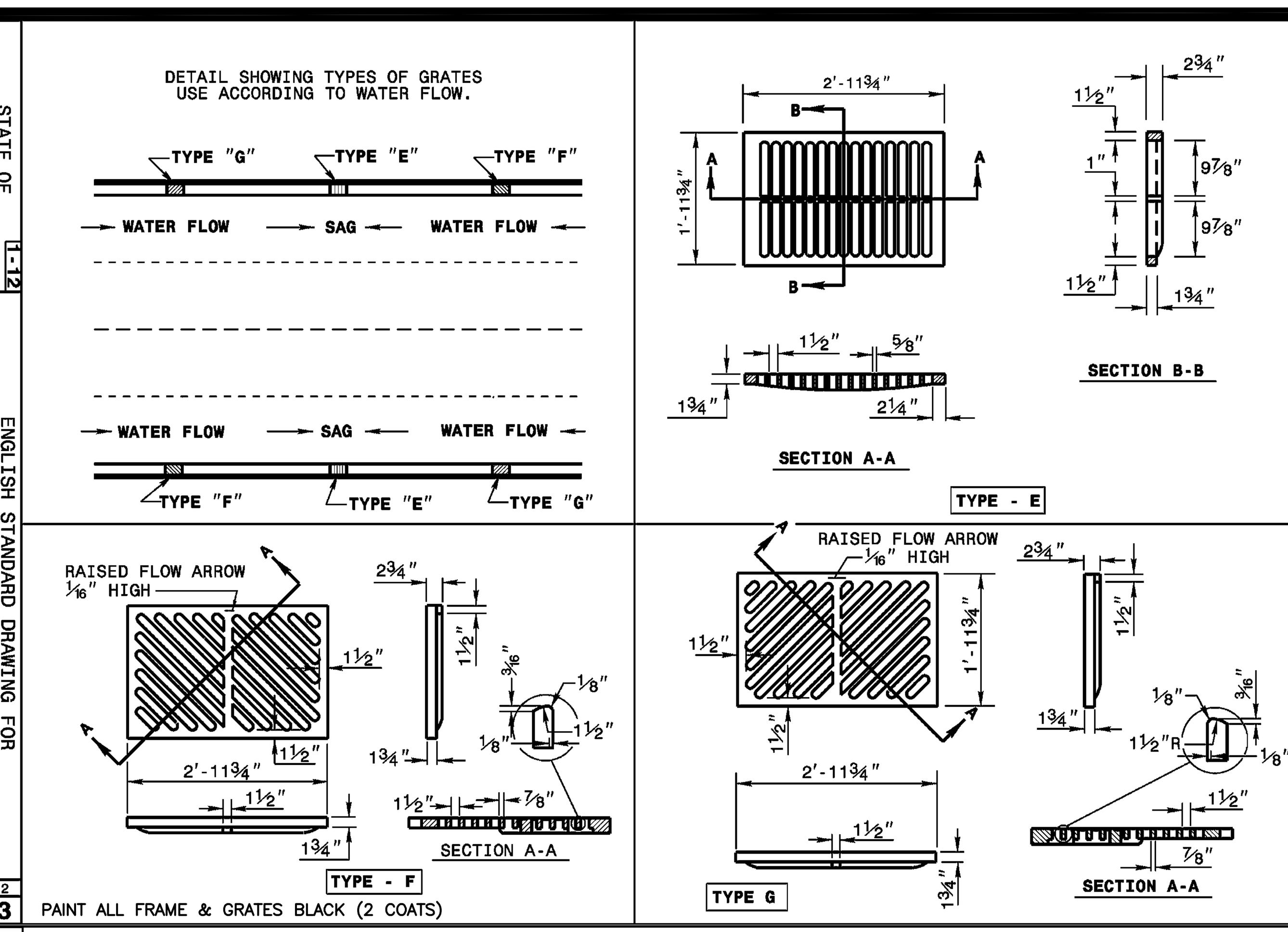


PAINT ALL FRAME & GRATES BLACK (2 COATS)

SHEET 2 OF 2 840.03

# 840.02 — ENGLISH STANDARD DRAWING FOR CONCRETE CATCH BASIN 12" THRU 54" PIPE (SHEET 2 OF 2)

STATE OF NORTH CAROLINA DEPT. OF TRANSPORTATION DIVISION OF HIGHWAYS RALEIGH, N.C. 1-12

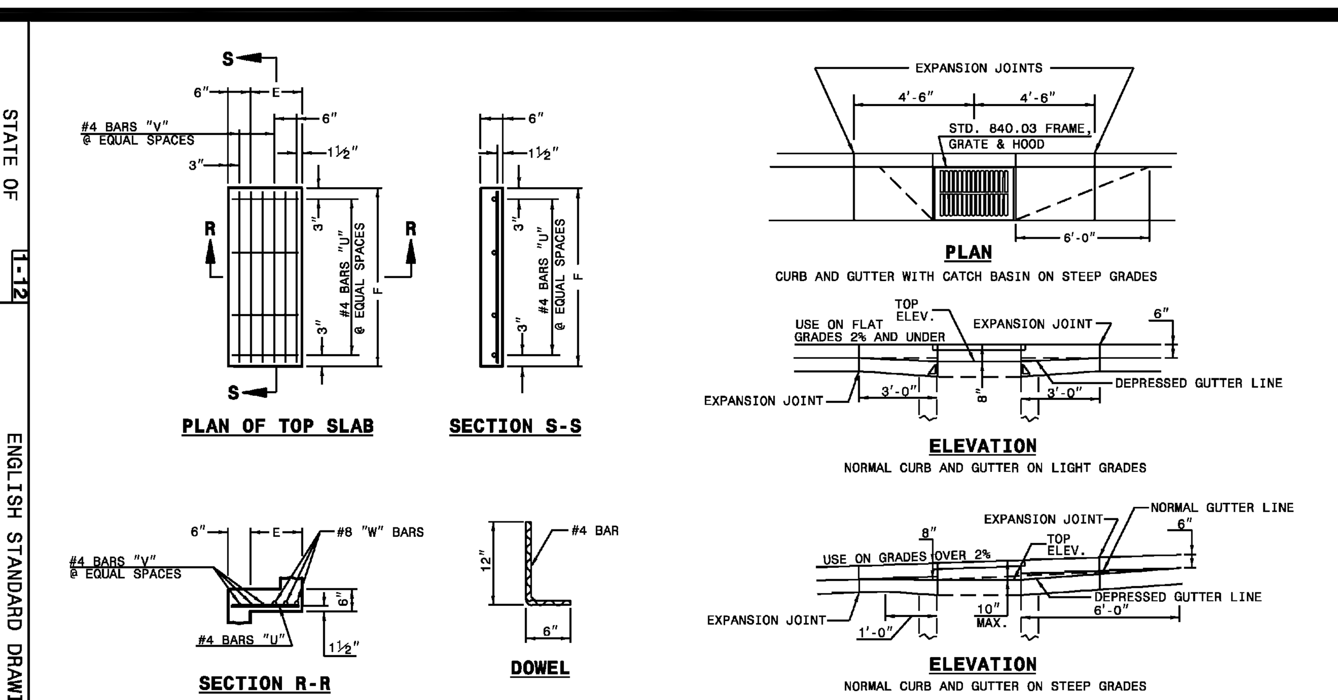


MINIMUM DIMENSIONS AND QUANTITIES FOR CONCRETE CATCH BASIN (BASED ON MIN. HEIGHT, H, WITH NO RISER) *

| PIPE | SPAN | WIDTH | WIDTH | SPAN | MIN. HEIGHT | COVER DIMENSION | | BARS-U | | BARS-V | | BARS-W | | TOTAL LBS. | TOP SLAB | BOTTOM SLAB | TOT. CONC. FOR MINIMUM HEIGHT, H | C.M. | R.C. |
|---|---|---|---|---|---|---|---|---|---|---|---|---|---|---|---|---|---|---|---|
| D | A | B | C | G | H | E | F | NO. | LENGTH | NO. | LENGTH | NO. | LENGTH | | | | | | |
| 12" | 3'-0" | 2'-2" | -- | -- | 2'-9" | -- | -- | -- | -- | -- | -- | -- | -- | -- | -- | 0.235 | 0.772 | 0.015 | 0.026 |
| 15" | 3'-0" | 2'-2" | | | 3'-0" | | | | | | | | | | | 0.235 | 0.829 | 0.023 | 0.036 |
| 18" | 3'-0" | 2'-2" | | | 3'-3" | | | | | | | | | | | 0.235 | 0.887 | 0.033 | 0.049 |
| 24" | 3'-0" | 2'-2" | | | 3'-9" | | | | | | | | | | | 0.235 | 1.001 | 0.059 | 0.085 |
| 30" | 3'-0" | 2'-2" | 3'-4" | | 4'-3" | 1'-2" | 4'-0" | 4 | 1'-5" | 2 | 3'-9" | 3 | 3'-9" | 39 | 0.123 | 0.321 | 1.433 | 0.092 | 0.127 |
| 36" | 3'-0" | 2'-2" | 3'-10" | | 4'-9" | 1'-8" | 4'-0" | 4 | 1'-11" | 3 | 3'-9" | 3 | 3'-9" | 43 | 0.161 | 0.358 | 1.714 | 0.132 | 0.178 |
| 42" | 3'-0" | 2'-2" | | 4'-5" | 5'-3" | 1'-5" | 3'-2" | 4 | 1'-8" | 2 | 2'-11" | 3 | 2'-11" | 32 | 0.112 | 0.318 | 1.738 | 0.180 | 0.243 |
| 48" | 3'-0" | 2'-2" | | 5'-0" | 5'-9" | 2'-0" | 3'-2" | 4 | 2'-3" | 3 | 2'-11" | 3 | 2'-11" | 35 | 0.145 | 0.352 | 2.052 | 0.235 | 0.317 |
| 54" | 3'-0" | 2'-2" | | 5'-7" | 6'-3" | 2'-7" | 3'-2" | 4 | 2'-10" | 5 | 2'-11" | 3 | 2'-11" | 41 | 0.180 | 0.386 | 2.387 | 0.297 | 0.401 |

(Column groups: DIMENSIONS OF BOX AND PIPE; COVER DIMENSION; CU. YDS. CONC. IN BOX; DEDUCTIONS ONE PIPE)

* RISER HAS .228 CUBIC YARDS OF CONCRETE PER FOOT HEIGHT

SHEET 2 OF 2 840.02

# 840.14 — ENGLISH STANDARD DRAWING FOR CONCRETE DROP INLET 12" THRU 30" PIPE

STATE OF NORTH CAROLINA DEPT. OF TRANSPORTATION DIVISION OF HIGHWAYS RALEIGH, N.C. 1-12

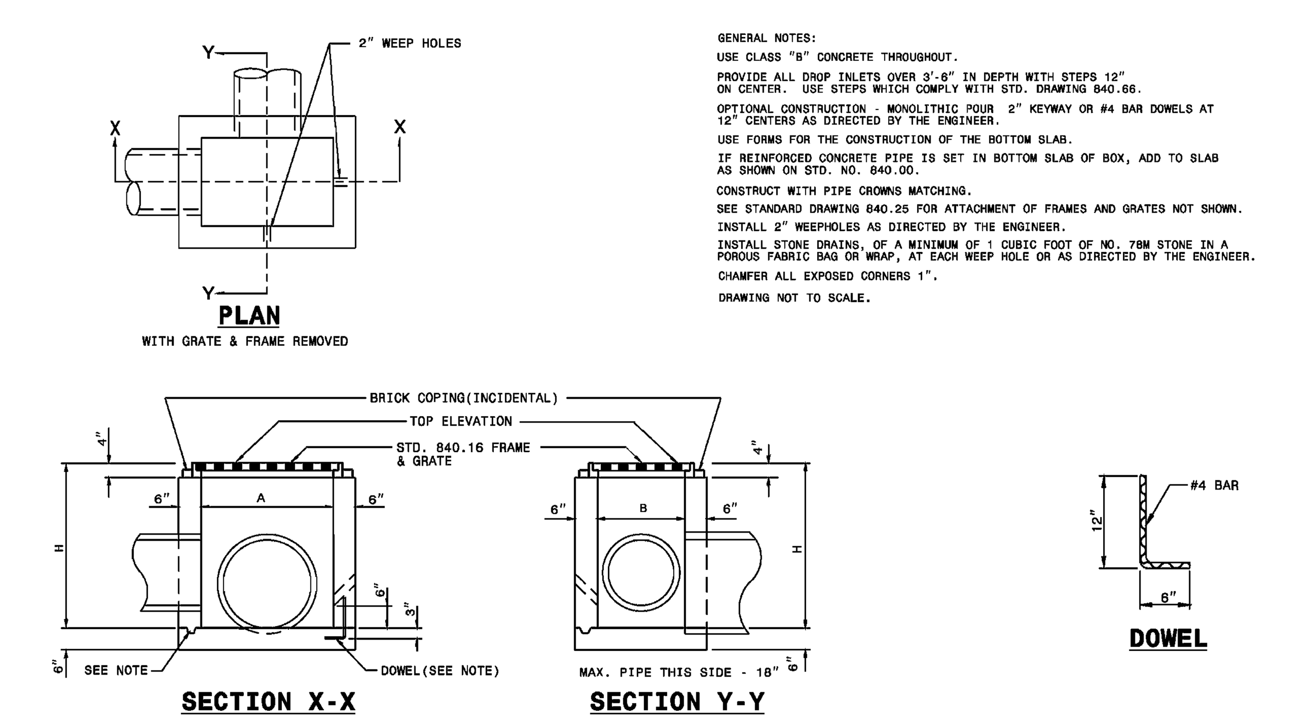


GENERAL NOTES:

USE CLASS "B" CONCRETE THROUGHOUT.

PROVIDE ALL DROP INLETS OVER 3'-6" IN DEPTH WITH STEPS 12" ON CENTER. USE STEPS WHICH COMPLY WITH STD. DRAWING 840.66.

OPTIONAL CONSTRUCTION - MONOLITHIC POUR 2" KEYWAY OR #4 BAR DOWELS AT 12" CENTERS AS DIRECTED BY THE ENGINEER.

USE FORMS FOR THE CONSTRUCTION OF THE BOTTOM SLAB.

IF REINFORCED CONCRETE PIPE IS SET IN BOTTOM SLAB OF BOX, ADD TO SLAB AS SHOWN ON STD. NO. 840.00.

CONSTRUCT WITH PIPE CROWNS MATCHING.

SEE STANDARD DRAWING 840.25 FOR ATTACHMENT OF FRAMES AND GRATES NOT SHOWN.

INSTALL 2" WEEPHOLES AS DIRECTED BY THE ENGINEER.

INSTALL STONE DRAINS, OF A MINIMUM OF 1 CUBIC FOOT OF NO. 78M STONE IN A POROUS FABRIC BAG OR WRAP, AT EACH WEEP HOLE OR AS DIRECTED BY THE ENGINEER.

CHAMFER ALL EXPOSED CORNERS 1".

DRAWING NOT TO SCALE.

DIMENSIONS AND QUANTITIES FOR DROP INLET (BASED ON MIN. HEIGHT, H)

| PIPE | SPAN | WIDTH | MIN. HEIGHT | BOTTOM SLAB | WALL PER FT. HT. | TOTAL CONCRETE FOR MINIMUM HEIGHT, H | C.M. | R.C. |
|---|---|---|---|---|---|---|---|---|
| D | A | B | H | | | | | |
| 12" | 3'-0" | 2'-0" | 2'-0" | 0.222 | 0.222 | 0.592 | 0.015 | 0.026 |
| 15" | / | / | 2'-3" | / | / | 0.648 | 0.023 | 0.036 |
| 18" | / | / | 2'-6" | / | / | 0.703 | 0.033 | 0.049 |
| 24" | / | / | 3'-0" | / | / | 0.814 | 0.059 | 0.085 |
| 30" | 3'-0" | 2'-0" | 3'-6" | 0.222 | 0.222 | 0.925 | 0.092 | 0.127 |

(Column groups: DIMENSIONS OF BOX & PIPE; CUBIC YARDS CONC. IN BOX; DEDUCTIONS FOR ONE PIPE)

SHEET 1 OF 1 840.14

# 840.16 — ENGLISH STANDARD DRAWING FOR DROP INLET FRAME AND GRATES FOR USE WITH STD. DWG.S 840.14 AND 840.15

STATE OF NORTH CAROLINA DEPT. OF TRANSPORTATION DIVISION OF HIGHWAYS RALEIGH, N.C. 1-12

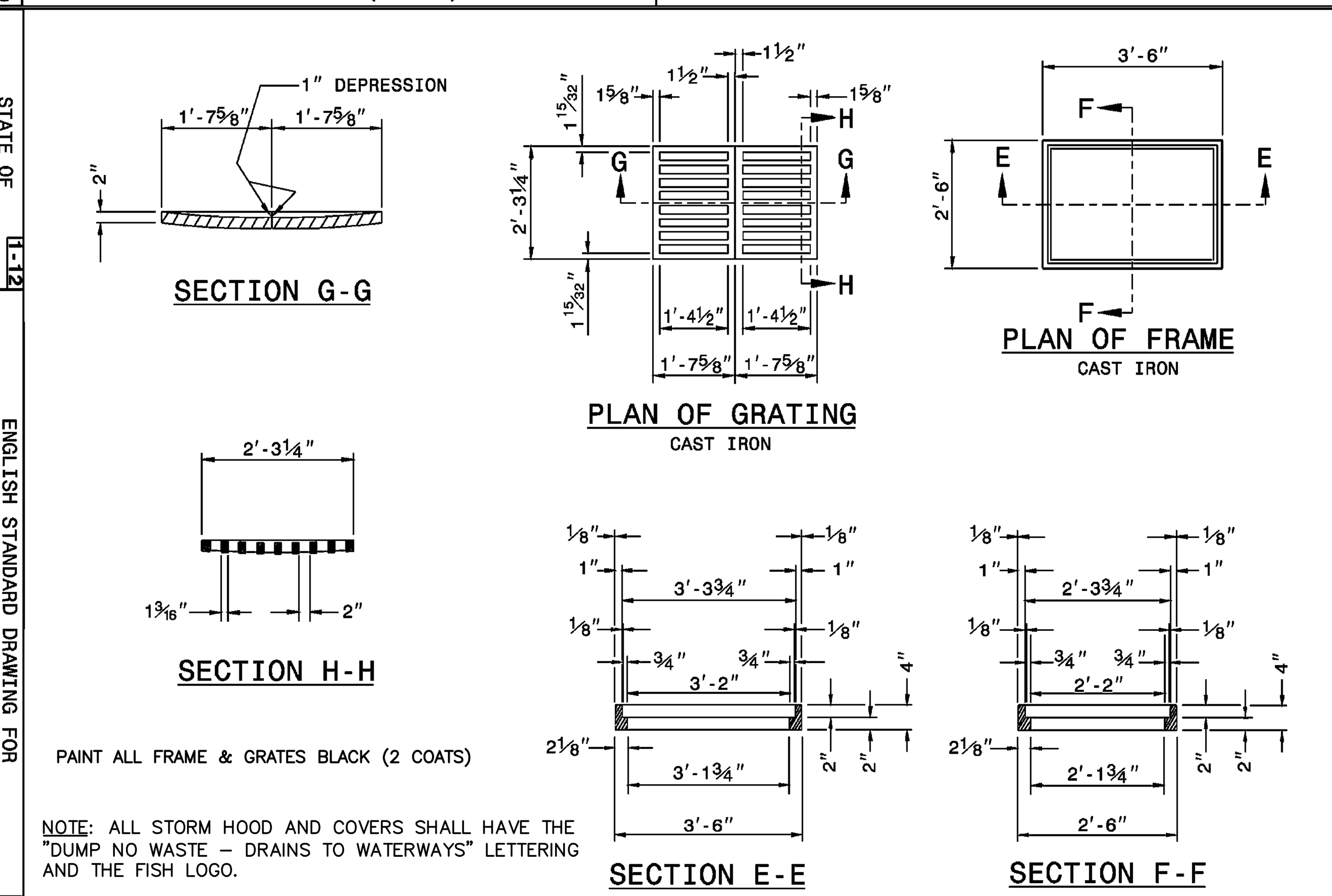


PAINT ALL FRAME & GRATES BLACK (2 COATS)

NOTE: ALL STORM HOOD AND COVERS SHALL HAVE THE "DUMP NO WASTE – DRAINS TO WATERWAYS" LETTERING AND THE FISH LOGO.

SHEET 1 OF 1 840.16

# 840.02 — ENGLISH STANDARD DRAWING FOR CONCRETE CATCH BASIN 12" THRU 54" PIPE (SHEET 1 OF 2)

STATE OF NORTH CAROLINA DEPT. OF TRANSPORTATION DIVISION OF HIGHWAYS RALEIGH, N.C. 1-12

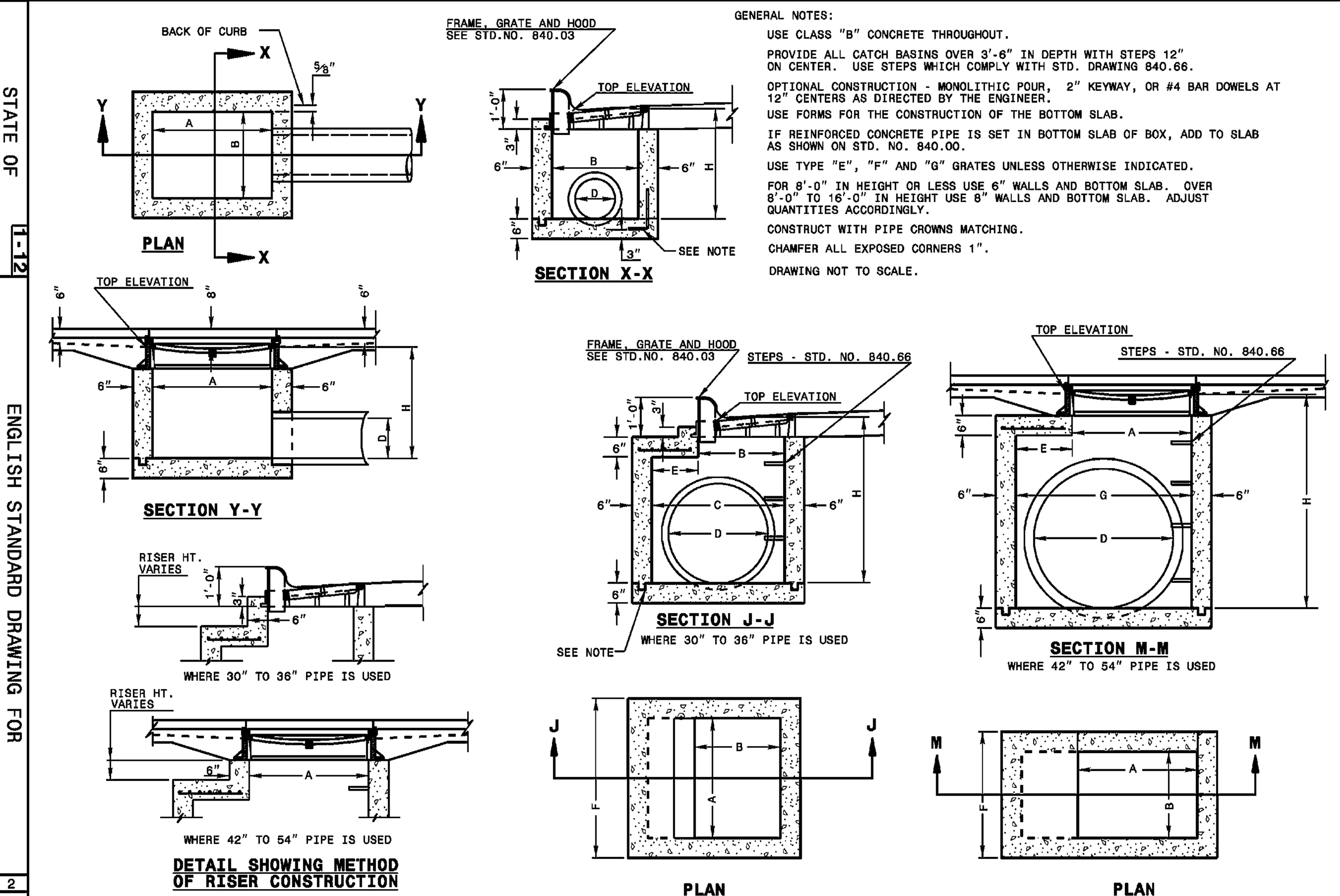


GENERAL NOTES:

USE CLASS "B" CONCRETE THROUGHOUT.

PROVIDE ALL CATCH BASINS OVER 3'-6" IN DEPTH WITH STEPS 12" ON CENTER. USE STEPS WHICH COMPLY WITH STD. DRAWING 840.66.

OPTIONAL CONSTRUCTION - MONOLITHIC POUR, 2" KEYWAY, OR #4 BAR DOWELS AT 12" CENTERS AS DIRECTED BY THE ENGINEER.

USE FORMS FOR THE CONSTRUCTION OF THE BOTTOM SLAB.

IF REINFORCED CONCRETE PIPE IS SET IN BOTTOM SLAB OF BOX, ADD TO SLAB AS SHOWN ON STD. NO. 840.00.

USE TYPE "E", "F" AND "G" GRATES UNLESS OTHERWISE INDICATED.

FOR 8'-0" IN HEIGHT OR LESS USE 6" WALLS AND BOTTOM SLAB. OVER 8'-0" TO 16'-0" IN HEIGHT USE 8" WALLS AND BOTTOM SLAB. ADJUST QUANTITIES ACCORDINGLY.

CONSTRUCT WITH PIPE CROWNS MATCHING.

CHAMFER ALL EXPOSED CORNERS 1".

DRAWING NOT TO SCALE.

SHEET 1 OF 2 840.02

# CONCRETE SIDEWALKS (106.1)

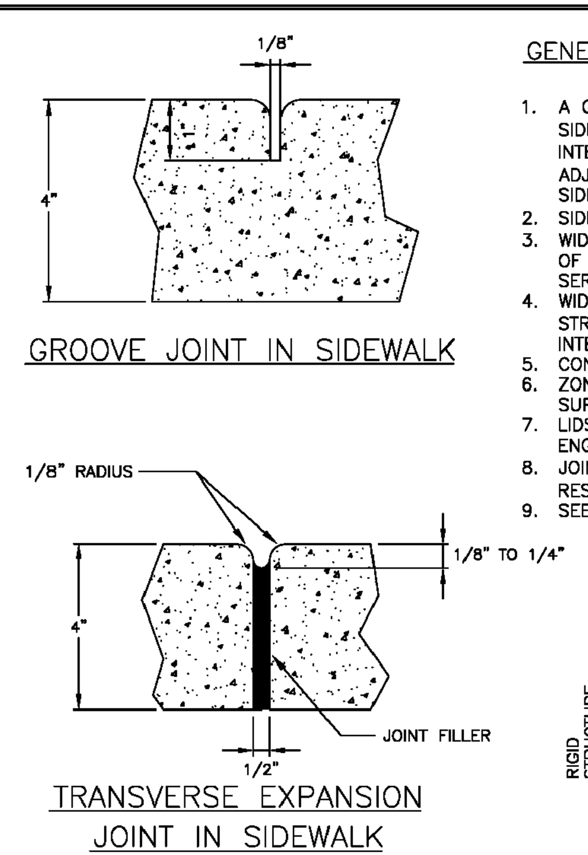


GENERAL NOTES:

1. A GROOVE JOINT 1" DEEP WITH 1/8" RADII SHALL BE REQUIRED IN THE CONCRETE SIDEWALK AT 5' INTERVALS. ONE 1/2" EXPANSION JOINT WILL BE REQUIRED AT 45' INTERVALS NOT TO EXCEED 50' AND MATCHING EXPANSION/CONSTRUCTION JOINT IN ADJACENT CURB. A SEALED 1/2" EXPANSION JOINT WILL BE REQUIRED WHERE THE SIDEWALK JOINS ANY RIGID STRUCTURE.
2. SIDEWALK AT DRIVEWAY ENTRANCES TO BE 6" THICK.
3. WIDTH OF SIDEWALK ON THOROUGHFARE STREETS SHALL BE A MINIMUM OF 6'. WIDTH OF SIDEWALKS IN THE CERTAIN DISTRICTS WILL BE DETERMINED BY THE DEVELOPMENT SERVICES.
4. WIDTH OF SIDEWALKS ON NON-THOROUGHFARE STREETS SHALL BE BASED ON TYPICAL STREET SECTION, A MINIMUM OF 5'. SIDEWALK TO BE POURED TO END OF RADIUS AT INTERSECTING STREETS.
5. CONCRETE COMPRESSIVE STRENGTH SHALL BE 3600 PSI. IN 28 DAYS.
6. ZONING CONDITIONS MAY REQUIRE ADDITIONAL WIDTH SIDEWALKS WHICH SHALL SUPERSEDE THESE STANDARD DIMENSIONS SHOWN.
7. LIDS FOR JUNCTION BOXES AND UTILITY VAULTS SHALL BE NON-SKID AS SPECIFIED BY ENGINEER.
8. JOINT MATERIALS SHALL LIMIT SHRINK/SWELL SO POST CONSTRUCTION INSTALLATION RESULTS IN A MAXIMUM OF 1/4" FROM FLUSH.
9. SEE ALSO 102.1

EXAMPLE SIDEWALK CONSTRUCTION DIMENSIONS:

| WIDTH | RISE | CROSS-SLOPE |
|---|---|---|
| 4' | ¾" | 1.56% |
| 5' | 1" | 1.67% |
| 6' | 1-⅛" | 1.56% |
| 8' | 1-½" | 1.56% |

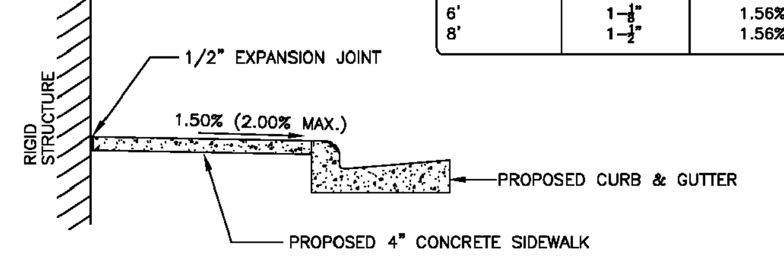


DETAILS SHOWING EXPANSION JOINTS IN CONCRETE SIDEWALK

NOT TO SCALE

TOWN OF WAXHAW LAND DEVELOPMENT STANDARDS — CONCRETE SIDEWALKS — STD. NO. 106.1 REV. 8/19

# TYPE II-MODIFIED DRIVEWAY DETAIL WITH WIDE PLANTING STRIP AND STANDARD CURB (115.1)

NOTES:

1. ALL CONCRETE TO BE 3600 P.S.I. COMPRESSIVE STRENGTH.
2. AT ALL DRIVEWAYS, SIDEWALKS TO BE REMOVED TO THE NEAREST JOINT BEYOND NEW CONSTRUCTION OR CUT WITH A SAW AND REMOVED. SAW CUT OR JOINT TO BE PERPENDICULAR TO EDGE OF EXISTING PAVEMENT. SEE STD. NO. 102.1 FOR JOINT DETAIL. PAY LIMITS FOR WORK DONE UNDER TOWN OF WAXHAW CONTRACTS ARE FROM EXPANSION JOINT TO EXPANSION JOINT, FROM LIP OF CURB TO BACK OF SIDEWALK.
3. ALL DRIVEWAYS MUST MEET THE CURRENT TOWN DRIVEWAY REGULATIONS AND NCDOT REQUIREMENTS FOR SPACING, SIGHT DISTANCE, AND OFFSETS FROM PROPERTY LINES AND INTERSECTIONS.
4. ALGEBRAIC DIFFERENCE IN GRADE ("A") BETWEEN SLOPES SHALL BE 8% OR LESS.
5. RADII MUST BE MINIMUM 6 FEET OR THE WIDTH OF THE PLANTING STRIP, WHICHEVER IS GREATER. RADII GREATER THAN THESE MINIMUMS MAY BE REQUIRED BY NCDOT ON A CASE-BY-CASE BASIS. FOR RADII GREATER THAN 6 FEET, THE RADII ARE TO CONTINUE AS A BAND AT-GRADE THROUGH THE SIDEWALK.
6. PER NC IFC SECTION D103.2, FIRE APPARATUS ACCESS ROADS SHALL NOT EXCEED 10 PERCENT IN GRADE.
7. PAVERS USED IN DRIVEWAY MUST HAVE A THICKNESS OF 3 INCHES.
8. JOINT MATERIAL SHOULD BE PLACED FLUSH WITH CONCRETE.

DRIVEWAY DIMENSIONS

| OPERATION/RADIUS | MINIMUM | MAXIMUM |
|---|---|---|
| ONE-WAY WITH 6-12 FT. RADII | 20' | 30' |
| ONE-WAY WITH 13+ FT. RADII | 15' | 25' |
| TWO-WAY WITH 6-12 FT. RADII | 26' | 50' |
| TWO-WAY WITH 13+ FT. RADII | 22' | 40' |

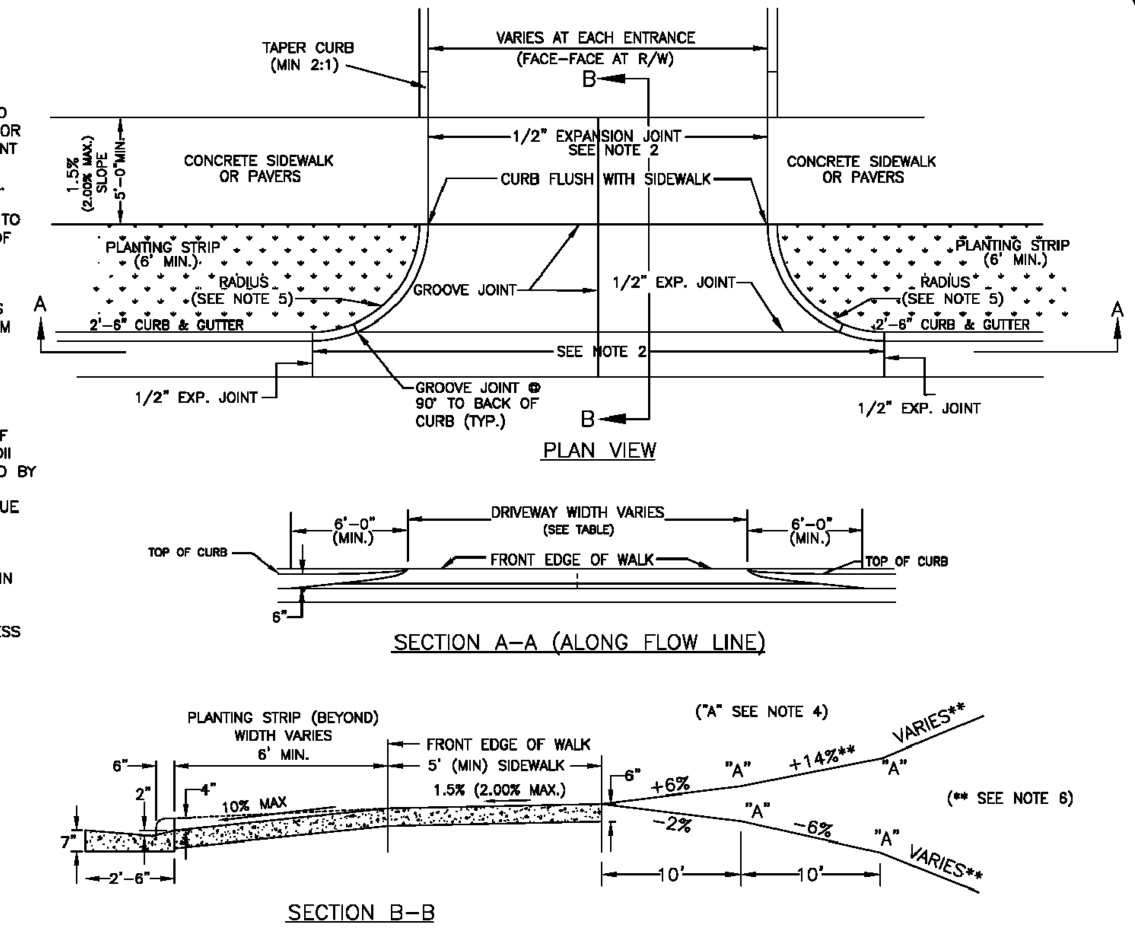


NOT TO SCALE

TOWN OF WAXHAW LAND DEVELOPMENT STANDARDS — TYPE II-MODIFIED DRIVEWAY DETAIL WITH WIDE PLANTING STRIP AND STANDARD CURB — STD. NO. 115.1 REV. 8/19

# ACCESSIBLE RAMP STANDARD WITHOUT PLANTING STRIP 2'-6" CURB AND GUTTER (125.1)

NOTES:

1. IF TURNING SPACE IS CONFINED BY CURB OR VERTICAL SURFACE AT BACK OF THE TURNING SPACE, THE MINIMUM WIDTH MUST INCREASE TO 5'-0" MIN.
2. ENSURE FLUSH CONDITIONS AT CURB RAMP TO GUTTER TRANSITION.

PROVIDE 5' LONG TRANSITION TO 6' WIDE WALK. ALL WALKS MUST BE A MIN. 6' WIDTH AT RAMP.

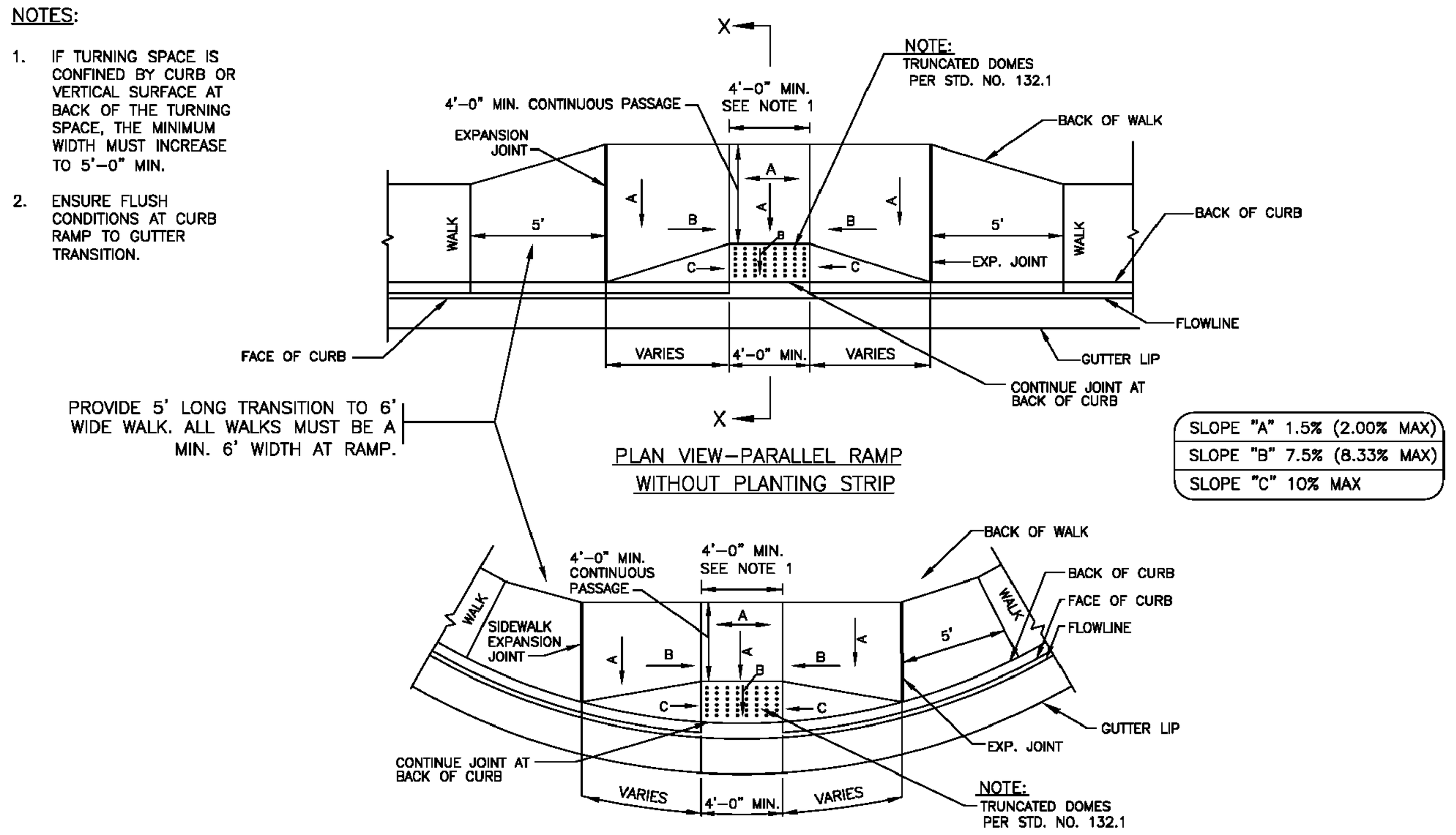


SLOPE "A" 1.5% (2.00% MAX)
SLOPE "B" 7.5% (8.33% MAX)
SLOPE "C" 10% MAX

NOT TO SCALE

TOWN OF WAXHAW LAND DEVELOPMENT STANDARDS — ACCESSIBLE RAMP STANDARD WITHOUT PLANTING STRIP 2'-6" CURB AND GUTTER — STD. NO. 125.1 REV.

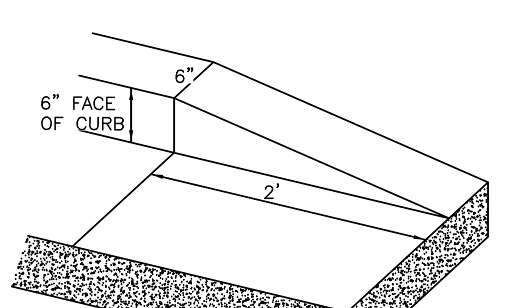


CURB TAPER DETAIL


MDV Engineering P-0883
C/O Ayer Design Group
215 Johnston Street
Rock Hill, SC 29730
Phone: 704-400-1044
Email:michael@mdveng.com


NORTH CAROLINA PROFESSIONAL ENGINEER SEAL 28274 7-1-20 MICHAEL D. NEWMAN

PROJECT

Arby's RESTAURANT w/ DRIVE-THRU
#8821
1001 ASPINAL ST.
WAXHAW, NC 28173
(PROVIDENCE ROAD)

FOR

BRG Brumit Restaurant Group
BRUMIT RESTAURANT GROUP, LLC
P.O. BOX 15726
ASHEVILLE, NC 28813
PH: 828.274.5835

REVISIONS

DWG. NAME : 2020-104
DRAWN BY : MDN
DATE. : 5-26-20
SCALE: N.T.S

DETAIL SHEET

C.6

1,000 GALLON MINIMUM GREASE INTERCEPTOR FURNISHED COMPLETE WITH CAST IRON MANHOLE AND RINGS. MANHOLE COVER SHALL BE FLUSH WITH FINISHED GRADE OR ASPHALT. ALL PIPE AND FITTINGS SHALL BE CAST IRON. ALL DIMENSIONS ARE APPROXIMATE ONLY AND SHALL BE VERIFIED WITH MANUFACTURER. GREASE INTERCEPTOR TO BE DESIGNED IN ACCORDANCE WITH THE NORTH CAROLINA STANDARD PLUMBING CODE LATEST EDITION. INLET AND DISCHARGE SHALL HAVE TEES EQUAL TO NEENAH MODEL R-1660.

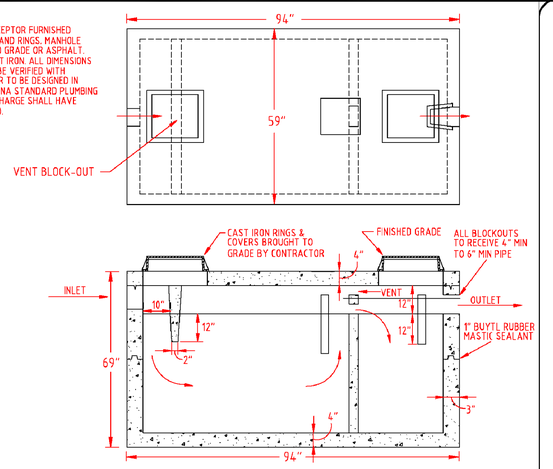


UNION COUNTY PUBLIC WORKS DEPARTMENT
UNION COUNTY, N.C.

STANDARD DETAIL

# GREASE INTERCEPTOR

SCALE: N.T.S.
DATE: 10-23-07
26

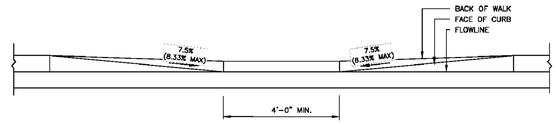


SECTION THROUGH FLOWLINE

NOTE:
ALL WALKS MUST BE A MIN. 6' WIDTH AT RAMPS.

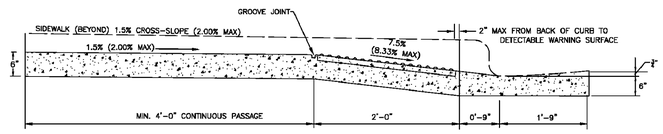


TYPICAL RAMP ℄ SECTION X-X

NOT TO SCALE

TOWN OF WAXHAW
LAND DEVELOPMENT STANDARDS

ACCESSIBLE RAMP SECTIONS WITHOUT PLANTING STRIP (2'-6" CURB AND GUTTER)

STD. NO. 126.1 | REV. 8/19

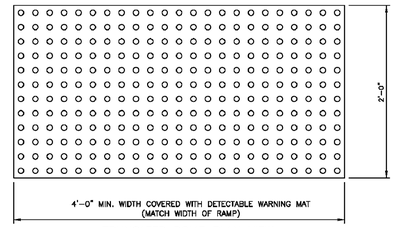


TRUNCATED DOME PLAN VIEW

NOTES:
1. ALL DETECTABLE WARNING DEVICES USED IN NEW CONSTRUCTION SHALL BE OF A RIGID PRECAST OR EMBEDDED PRODUCT APPROVED BY THE TOWN ENGINEER. RETRO FIT MATS WILL ONLY BE ALLOWED ON EXISTING RAMPS WITH PRIOR APPROVAL OF THE TOWN ENGINEER FOR MATERIAL TYPE AND INSTALLATION (IE. RESURFACING).
2. RAMP AND DETECTABLE WARNING AREA SHALL BE A MINIMUM OF 4 FEET IN WIDTH, BUT NOT BE LESS THAN THE WIDTH OF SIDEWALK LEADING TO SACK OF RAMP.
3. DETECTABLE WARNING SURFACES SHALL EXTEND 2.0 FT MINIMUM IN THE DIRECTION OF PEDESTRIAN TRAVEL.
4. DETECTABLE WARNING AREA CAN BE SQUARE WHERE USED IN A CURB RADIUS.
5. THE ROWS OF TRUNCATED DOMES IN DETECTABLE WARNING SURFACES SHOULD BE ALIGNED PERPENDICULAR TO THE GRADE BREAK BETWEEN THE RAMP RUN AND THE STREET. WHERE DETECTABLE WARNING SURFACES ARE PROVIDED ON A SURFACE WITH A SLOPE THAT IS LESS THAN 5 PERCENT, DOME ORIENTATION IS LESS CRITICAL.
6. DECTECTABLE WARNING AREA SHALL BE COLORED BLACK IN ALL LOCATIONS.
7. IF PAVERS ARE TO BE USED, PAVERS SHALL BE 6" THICK AND CAST FROM 5000 psi CONCRETE.
8. MATS ARE TO BE RIGID. WITH TURN DOWN EDGES EMBEDDED IN CONCRETE TO ELIMINATE TRIP HAZARD.
9. DIMENSIONS PER NCDOT 848.06

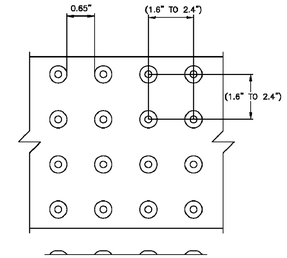


TRUNCATED DOME SPACING

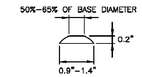


TRUNCATED DOME SECTION

NOT TO SCALE

TOWN OF WAXHAW
LAND DEVELOPMENT STANDARDS

TRUNCATED DOMES
PLAN AND CROSS-SECTION

STD. NO. 132.1 | REV. 8/19

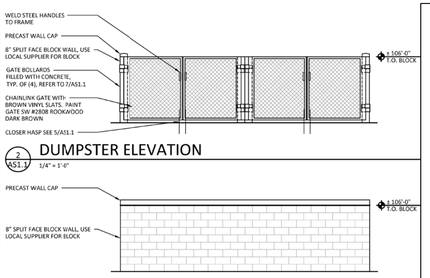


DUMPSTER ELEVATION
2 / AS1.1 1/4" = 1'-0"




DUMPSTER ELEVATION
3 / AS1.1 1/4" = 1'-0"

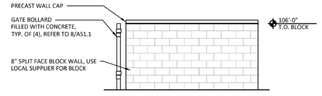


DUMPSTER ELEVATION
4 / AS1.1 1/4" = 1'-0"

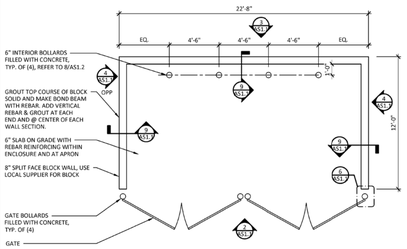


DUMPSTER PLAN
1 / AS1.1 1/4" = 1'-0"

SHOWN FOR REFERENCE ONLY. SEE ARCHITECTURAL PLANS FOR DUMPSTER PLAN AND ELEVATIONS

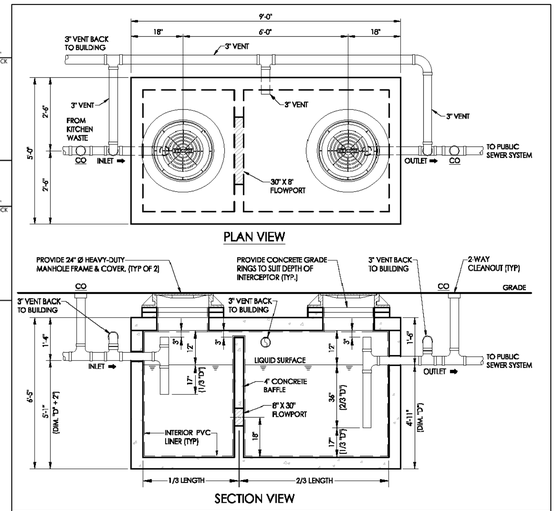


GREASE INTERCEPTOR VENT PIPING DETAIL

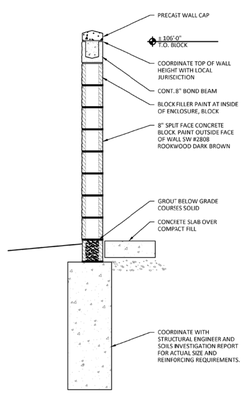


DUMPSTER WALL SECTION
9 / AS1.1 1/4" = 1'-0"

NOTE: MUST BE JOSAM MODEL #56044

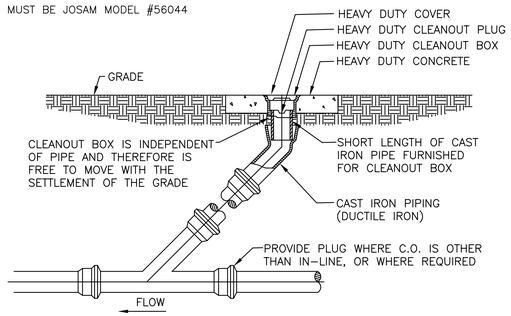


EXTERIOR CLEANOUT DETAIL
SCALE: NONE

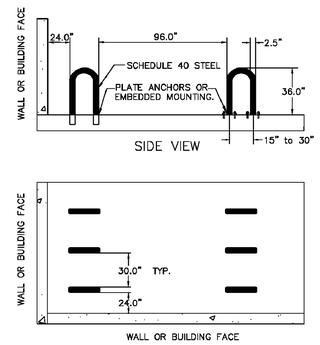


NOTES:
1. BIKE RACKS SHOULD BE INSTALLED AS PER MANUFACTURER'S RECOMMENDED INSTALLATION PROCEDURES.
2. ALTERNATIVE BIKE RACKS OR LOCKERS MAY BE USED BUT ARE SUBJECT TO APPROVAL BY THE TOWN ENGINEER.
3. ALL DIMENSIONS SHOWN ARE MINIMUM.
4. PLACEMENT SHOULD BE CANE DETECTABLE AND PLACED OUTSIDE PEDESTRIAN ACCESS ROUTE.

NOT TO SCALE

TOWN OF WAXHAW
LAND DEVELOPMENT STANDARDS

INVERTED "U" RACK FOR BICYCLE PARKING

STD. NO. 716.1 | REV.


MDV Engineering P-0883
C/O Ayer Design Group
215 Johnston Street
Rock Hill, SC 29730
Phone: 704-400-1044
Email:michael@mdveng.com


NORTH CAROLINA PROFESSIONAL SEAL 28274 ENGINEER MICHAEL D. NEUMAN 7-1-20

PROJECT

Arby's

RESTAURANT w/ DRIVE-THRU

#8821
1001 ASPINAL ST.
WAXHAW, NC 28173
(PROVIDENCE ROAD)

FOR

BRG Brumit Restaurant Group


BRUMIT RESTAURANT GROUP, LLC
P.O. BOX 15726
ASHEVILLE, NC 28813
PH: 828.274.5835


REVISIONS

DWG. NAME : 2020-104
DRAWN BY : MDN
DATE. : 5-26-20
SCALE: N.T.S

DETAIL SHEET

C.7

NOTE:

SUPPLEMENTAL VAN ACCESSIBLE SIGN (R7-8P) USED IF THERE IS ONLY ONE REQUIRED ACCESSIBLE PARKING SPACE (MUST BE VAN ACCESSIBLE) AND AT EACH ADDITIONAL REQUIRED VAN ACCESSIBLE SPACE. (SEE STD. NO. 713.1)

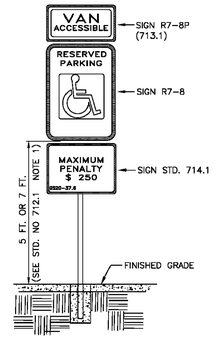


LEGEND AND BORDER – GREEN
BACKGROUND – WHITE

SIGN APPROVED FOR USE UNDER GENERAL STATUTE 20–37.6

THIS PENALTY SIGN IS REQUIRED TO ACCOMPANY ALL R7–8 PARKING SIGNS ERECTED AFTER DECEMBER 31,1990

NOT TO SCALE

| TOWN OF WAXHAW LAND DEVELOPMENT STANDARDS | SUPPLEMENTAL ACCESSIBLE PENALTY SIGN | STD. NO. 714.1 | REV. |
|---|---|---|---|

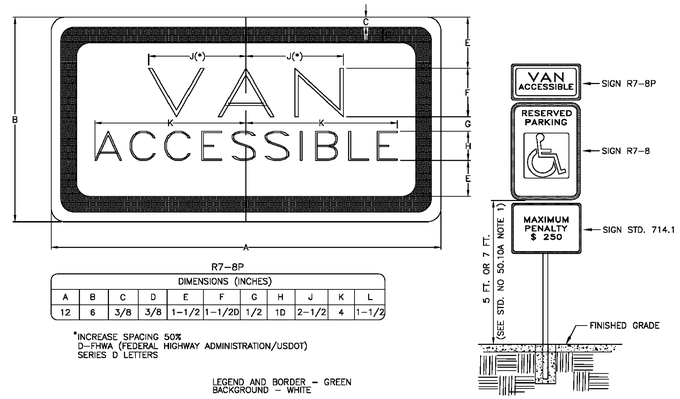


R7–8P

| DIMENSIONS (INCHES) | | | | | | | | | | | |
|---|---|---|---|---|---|---|---|---|---|---|---|
| A | B | C | D | E | F | G | H | J | K | L |
| 12 | 6 | 3/8 | 3/8 | 1–1/2 | 1–1/2D | 1/2 | 1D | 2–1/2 | 4 | 1–1/2 |

*INCREASE SPACING 50%
D–FHWA (FEDERAL HIGHWAY ADMINISTRATION/USDOT) SERIES D LETTERS

LEGEND AND BORDER – GREEN
BACKGROUND – WHITE

NOT TO SCALE

| TOWN OF WAXHAW LAND DEVELOPMENT STANDARDS | SUPPLEMENTAL VAN ACCESSIBLE SIGN (R7–8P) | STD. NO. 713.1 | REV. |
|---|---|---|---|

ACCESSIBLE PARKING REQUIREMENTS

| TOTAL PARKING SPACES PROVIDED | MINIMUM NUMBER OF ACCESSIBLE SPACES SPACES REQUIRED | MINIMUM NUMBER OF ACCESSIBLE SPACES REQUIRED TO BE VAN ACCESSIBLE |
|---|---|---|
| 1 TO 25 | 1 | 1 |
| 26 TO 50 | 2 | 1 |
| 51 TO 75 | 3 | 1 |
| 76 TO 100 | 4 | 1 |
| 101 TO 150 | 5 | 1 |
| 151 TO 200 | 6 | 1 |
| 201 TO 300 | 7 | 2 |
| 301 TO 400 | 8 | 2 |
| 401 TO 500 | 9 | 2 |
| 501 TO 1000 | 2% OF TOTAL | 1 IN EVERY 6 ACCESSIBLE SPACES |
| 1001 AND OVER | 20 PLUS 1 FOR EACH 100 OVER 1000 | 1 IN EVERY 6 ACCESSIBLE SPACES |
| REFERENCE: SECTION 1106 OF NC BUILDING CODE | | |

NOTES:

1. ALL 12"x18" ACCESSIBLE SIGNS (R7–8 & R7–1) SHALL BE MOUNTED AT 7 FEET FROM GRADE TO BOTTOM EDGE OF SIGN FACE (MUTCD). MOUNTING HEIGHT CAN BE REDUCED TO 5 FEET IF PLACED IN AN AREA BETWEEN SIDEWALK AND BUILDING FACE IN WHICH PEDESTRIANS ARE NOT EXPECTED TO USE.
2. IF ACCESSIBLE ROUTE IS A RAISED SIDEWALK AREA, THEN RAMPS ARE REQUIRED AT LOADING ZONE AREA. MAINTAIN MIN. 4' WIDE CONTINUOUS PASSAGE.
3. VERTICAL CLEARANCE FOR VANS MUST BE GREATER THAN 98–INCHES.
4. THIS DETAIL IS TO PROVIDE GENERAL GUIDANCE FOR PARKING LAYOUT AND DESIGN; REFER TO MANUAL ON UNIFORM TRAFFIC CONTROL DEVICES (MUTCD) U.S. DEPARTMENT OF TRANSPORTATION AND NORTH CAROLINA DEPARTMENT OF TRANSPORTATION SUPPLEMENT AND NC BUILDING CODE FOR ADDITIONAL INFORMATION.

PARKING SPACE PAVEMENT MARKINGS

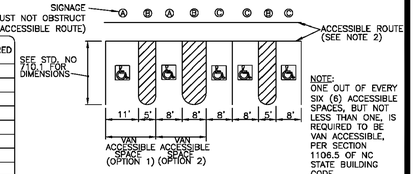


NOTE:
ONE OUT OF EVERY SIX (6) ACCESSIBLE SPACES, BUT NOT LESS THAN ONE, IS REQUIRED TO BE VAN ACCESSIBLE, PER SECTION 1106.5 OF NC STATE BUILDING CODE

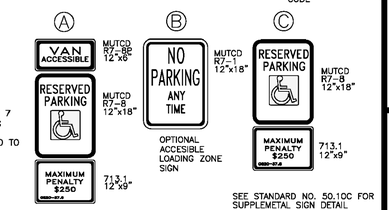


SEE STANDARD NO. 50.10C FOR SUPPLEMETAL SIGN DETAIL

NOT TO SCALE

| TOWN OF WAXHAW LAND DEVELOPMENT STANDARDS | ACCESSIBLE PARKING AND SIGNAGE STANDARDS | STD. NO. 712.1 | REV. |
|---|---|---|---|

SIDEWALK ADJACENT TO HEAD–IN OR BACK–IN PARKING SHALL BE AT LEAST 7 FEET WIDE.

PARKING ON ONE SIDE OF A SIDEWALK

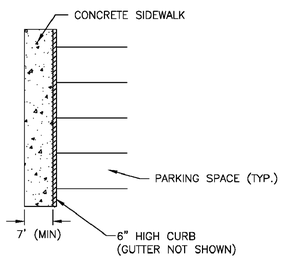


SIDEWALK BETWEEN TWO ROWS OF HEAD–IN OR BACK–IN PARKING SHALL BE AT LEAST 9 FEET WIDE.

PARKING ON BOTH SIDES OF A SIDEWALK

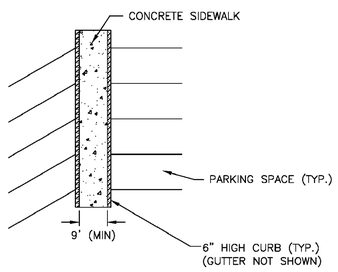


NOTES:

1. A 2–FOOT–WIDE PLANTING STRIP LOCATED AT THE BACK OF CURB CAN BE USED IN LIEU OF 2 FEET OF SIDEWALK WIDTH.
2. PARKING AT ANY ANGLE OTHER THAN PARALLEL SHALL BE SUBJECT TO THIS STANDARD.
3. IF MONOLITHIC CURB & SIDEWALK IS USED, ADD 6" TO ALL DIMENSIONS (1' IF PARKING ON BOTH SIDES).
4. WHEELSTOPS SHALL ONLY BE USED IN LIEU OF 2 FEET OF SIDEWALK WITH THE APPROVAL OF THE TOWN AND WHEN EXISTING CONDITIONS PREVENT CONSTRUCTION OF A 7–FOOT/9–FOOT SIDEWALK. WHEELSTOPS SHALL BE 6" HIGH, MADE OUT OF 3600–PSI REINFORCED CONCRETE, AND ANCHORED WITH #5 OR GREATER REBAR (2' MINIMUM LENGTH). REBAR HOLES SHALL BE GROUTED UPON INSTALLATION. WHEELSTOPS SHALL BE PLACED AT 2 FEET FROM THE EDGE OF SIDEWALK OR OBSTRUCTION.

NOT TO SCALE

| TOWN OF WAXHAW LAND DEVELOPMENT STANDARDS | PARKING STANDARDS (CONTINUED) | STD. NO. 711.1 | REV. |
|---|---|---|---|

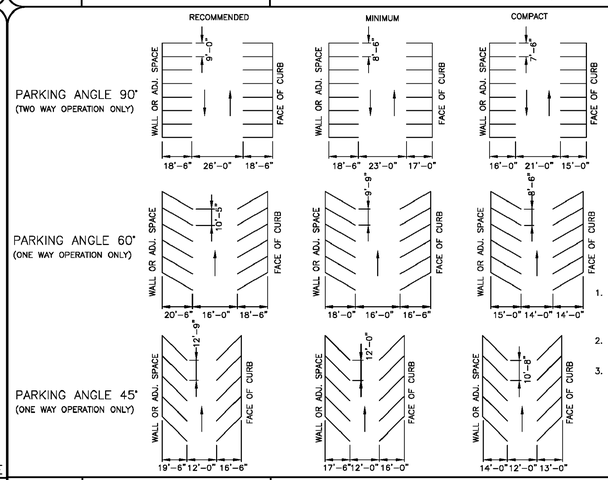


NOTES:

1. FOR ACCESSIBLE PARKING STANDARDS/SIGNAGE SEE STDS. 712.1, 713.1, AND 714.1.
2. PAVEMENT MARKINGS SHALL BE 4" WHITE PAINT.
3. ALTERNATIVE PARKING ANGLES, AISLE WIDTHS, AND OPERATION (TWO–WAY ANGLED PARKING OR REVERSE–ANGLE PARKING) WILL BE CONSIDERED BY TOWN ON A CASE–BY–CASE BASIS.

NOT TO SCALE

| TOWN OF WAXHAW LAND DEVELOPMENT STANDARDS | PARKING STANDARDS | STD. NO. 710.1 | REV. |
|---|---|---|---|

1. 10' X 70' AND 35' X 35' SIGHT TRIANGLES SHALL BE PROVIDED ON BOTH SIDES OF THE CONNECTING ROAD WHEN A MAIN ENTRANCE ROAD FOR A SUBDIVISION IS CONNECTED TO AN EXISTING ROAD IN ACCORDANCE WITH (A). THESE DIMENSION SHALL BE MEASURED FROM THE POINT OF INTERSECTION OF THE TWO RIGHT–OF–WAY LINES LONGITUDINALLY ALONG THE RIGHT–OF–WAY LINES
2. 35' X 35' SIGHT TRIANGLES SHALL BE PROVIDED ON ALL CORNERS OF AN INTERSECTION FOR ALL INTERIOR SUBDIVISION STREETS IN ACCORDANCE WITH (B). THESE DIMENSION SHALL BE MEASURED FROM THE POINT OF INTERSECTION OF THE TWO RIGHT–OF–WAY LINES LONGITUDINALLY ALONG THE RIGHT–OF–WAY LINES
3. NO TREES, PLANTS, SHRUBS OVER 2'6" HEIGHT IN SIGHT TRIANGLE.

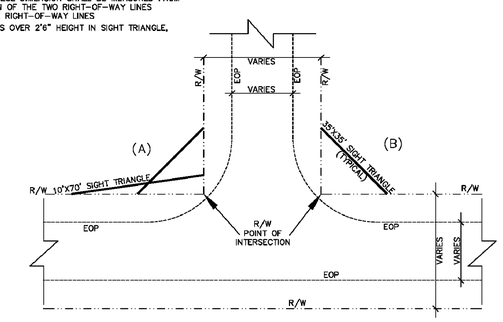


NOT TO SCALE

| TOWN OF WAXHAW LAND DEVELOPMENT STANDARDS | TYPICAL SIGHT TRIANGLES | REV. DATE | STD. NO. 726.1 |
|---|---|---|---|


MDV Engineering P-0883
C/O Ayer Design Group
215 Johnston Street
Rock Hill, SC 29730
Phone: 704-400-1044
Email:michael@mdveng.com


NORTH CAROLINA PROFESSIONAL SEAL 28274 7-1-20 ENGINEER MICHAEL D. NEUMAN

PROJECT

Arby's

RESTAURANT
w/ DRIVE-THRU

#8821
1001 ASPINAL ST.
WAXHAW, NC 28173
(PROVIDENCE ROAD)

FOR

BRG Brumit Restaurant Group


BRUMIT RESTAURANT GROUP, LLC
P.O. BOX 15726
ASHEVILLE, NC 28813
PH: 828.274.5835


REVISIONS

DWG. NAME : 2020–104
DRAWN BY : MDN
DATE. : 5–26–20
SCALE: N.T.S

**DETAIL SHEET**

# C.8

GENERAL NOTES

(1) RPZ SHALL BE INSTALLED FOR CUSTOMER APPLICATIONS APPROVED BY UNION COUNTY PUBLIC WORKS.
(2) REDUCED PRESSURE PRINCIPLE BACKFLOW PREVENTION ASSEMBLY SHALL COMPLY WITH ASSE 1013 & AWWA C511 (FEBCO 825Y, WILKINS MODEL 975XL, HERSEY MODEL FRPII OR EQUAL).
(3) OWNER SHALL PROVIDE WRITTEN CERTIFICATION TO THE COUNTY THAT THE RPZ HAS BEEN TESTED BY A CERTIFIED BACKFLOW PREVENTION TECHNICIAN AFTER INSTALLATION.
(4) BACKFLOW PREVENTION ASSEMBLY SHALL BE CENTERED ON CONCRETE OR APPROVED FIBERGLASS MOUNTING PAD AND CENTERED WITHIN ENCLOSURE.
(5) REDUCER PRESSURE ZONE ASSEMBLY SHALL BE ABOVE GROUND ONLY.
(6) BACKFLOW PREVENTION ASSEMBLY SHALL BE INSTALLED OUTSIDE OF THE RIGHT OF WAY, MAXIMUM OF 5 FEET.
(7) PIPE MATERIAL SHALL BE BRASS (ASTM B43).
(8) INSTALLATION SHALL BE IN COMPLIANCE WITH ALL APPLICABLE COUNTY ORDINANCES AND SPECIFICATIONS IN ADDITION TO THE N.C. PLUMBING CODE.
(9) PROPERTY OWNER SHALL BE RESPONSIBLE FOR MAINTENANCE AND OPERATION OF BACKFLOW ASSEMBLY AND COMPLIANCE WITH REPORTING AND TESTING REQUIREMENTS.

REDUCED PRESSURE PRINCIPLE BACKFLOW PREVENTION ASSEMBLY

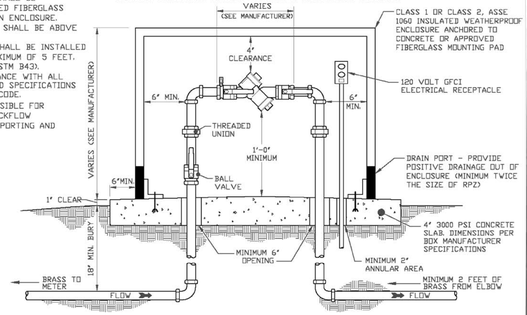


UNION COUNTY PUBLIC WORKS DEPARTMENT
UNION COUNTY, N.C.
STANDARD DETAIL
REDUCED PRESSURE ZONE ASSEMBLY (3/4" - 2")
SCALE: N.T.S
DATE: 12-13-13
24A

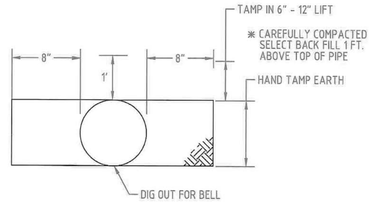


NOTES:
MINIMUM COVER IS 36"
2" PVC SDR 21 (200 PSI)
6"-8" PVC SDR 18
12" OR LARGER DIP

* NO STONES LARGER THAN # 67 STONE SHALL BE USED IN SELECT BACKFILL

UNION COUNTY PUBLIC WORKS DEPARTMENT
UNION COUNTY, N.C.
STANDARD DETAIL
WATER TRENCH
SCALE: N.T.S
DATE: 1-14-10
8B

GENERAL NOTES:

1) METER BOX LID TO HAVE AMR LOCATOR (ALLIANCE 1200 OR EQUAL FOR 50W ERT, STANDARD LID FOR 60W ERT)
2) BUILDER/PROPERTY OWNER TO INSTALL NIPPLE, VALVE AND VALVE BOX BEFORE METER WILL BE SET.
3) METER AND ERT BY UNION COUNTY @ PREVAILING RATE

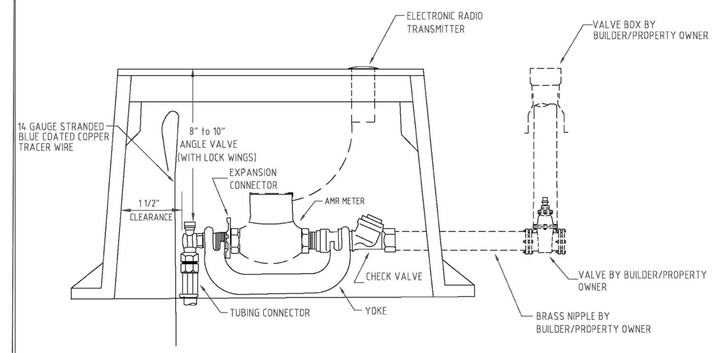


UNION COUNTY PUBLIC WORKS DEPARTMENT
UNION COUNTY, N.C.
STANDARD DETAIL
METER INSTALLATION FOR AMR METERS
SCALE: N.T.S.
DATE: 1-2-14
6

GRAVITY SEWER - BEDDING DETAIL

NOTES:

FOR PVC -- USE SDR 35 FOR 10 FT. OR LESS. USE SDR 26 FOR 10 FT. OR MORE.

USE DUCTILE IRON - IF UNDER 3 FT. DEEP OR OVER 18 FT. DEEP.

* NO STONES LARGER THAN # 67 STONE SHALL BE USED IN SELECT BACKFILL

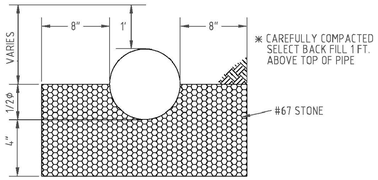


CLASS C

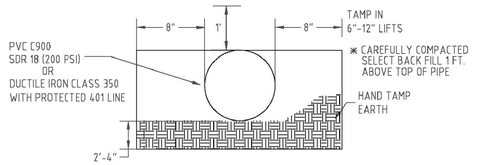


FORCE MAIN

UNION COUNTY PUBLIC WORKS DEPARTMENT
UNION COUNTY, N.C.
STANDARD DETAIL
SEWER BEDDING
SCALE: N.T.S
DATE: 12-16-13
8A

NOTE:
FOR CONCRETE PAVEMENT SUBSTITUTE 3500 PSI CONCRETE TO MATCH EXISTING THICKNESS FOR I-2 ASPHALT 4" ABC STONE FOR H BASE.

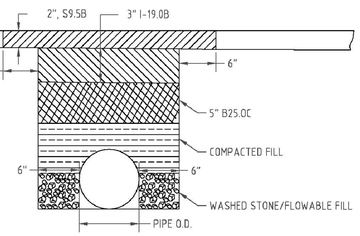


UNION COUNTY PUBLIC WORKS DEPARTMENT
UNION COUNTY, N.C.
STANDARD DETAIL
PAVEMENT REPLACEMENT
SCALE: N.T.S.
DATE: 11-7-14
15

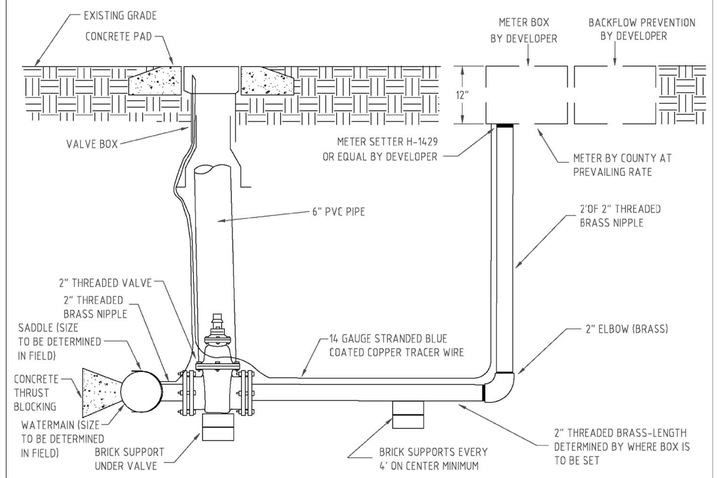


UNION COUNTY PUBLIC WORKS DEPARTMENT
UNION COUNTY, N.C.
STANDARD DETAIL
2" SHORTSIDE SERVICE FOR 1 1/2" OR 2" METERS
SCALE: N.T.S.
DATE: 5-22-13
19

NOTES:

1. THE CLEAN-OUT SHALL BE ADJUSTED TO GRADE AND THE POST REMOVED BY THE PLUMBER UPON CONNECTION TO THE TAP.
2. PLUMBER SHALL HAVE THE OPTION TO INSTALL A ONE PIECE 4" SCH. 40 COMBINATION WYE TO MINIMIZE TRENCH DEPTH OR INSTALL THE SEWER SERVICE LATERAL FROM THE 4" STUB OUT.
3. ALL CONSTRUCTION BY THE PLUMBER, EITHER OPTION 1 OR OPTION 2, SHALL BE INSPECTED AND APPROVED BY UNION COUNTY PLUMBING INSPECTOR UNDER A VALID PLUMBING PERMIT.
4. CONTRACTOR OR UNION COUNTY PUBLIC WORKS PERSONNEL MAY ADJUST SERVICE LATERAL ELEVATION WITH FITTINGS IF ADEQUATE GRADE EXISTS.
5. LATERAL CONNECTIONS TO MANHOLES MUST BE CORED AND BOOT INSTALLED.

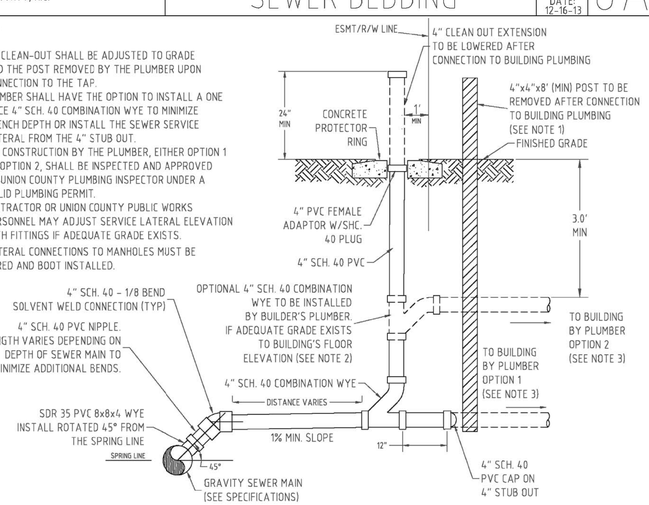


UNION COUNTY PUBLIC WORKS DEPARTMENT
UNION COUNTY, N.C.
STANDARD DETAIL
SEWER LATERAL
SCALE: N.T.S.
DATE: 7-19-11
11

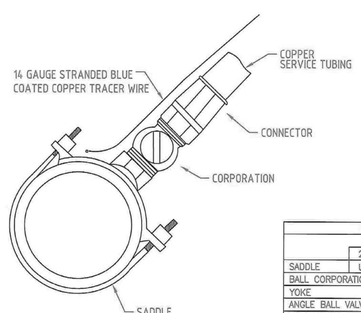


| APPROVED SERVICE HARDWARE | | | |
|---|---|---|---|
| | | MUELLER | FORD |
| SADDLE | 2"PVC | H-13420 | S70 |
| | UP TO 8" | SEE NOTE | FC 101 |
| BALL CORPORATION | | B-25008 | FB1000G |
| YOKE | | H-5020 | Y 502 |
| ANGLE BALL VALVE | | B-24273 | BA94-323WG |
| CHECK VALVE | | H-14247-A | HH591-323 |
| CONNECTORS | COPPER | STYLE 110 | GRIP JOINT |
| EXPANSION CONNECTION | | | EC 23 |

NOTE:
ROMAC 101N SHALL REPLACE MUELLER FOR PIPE DIAMETER UP TO 8"

SMITH BLAIR 317, FORD FC 202 OR ROMAC 202N SHALL REPLACE MUELLER FOR PIPE DIA. 12" AND UP

UNION COUNTY PUBLIC WORKS DEPARTMENT
UNION COUNTY, N.C.
STANDARD DETAIL
SERVICE CONNECTION
SCALE: N.T.S.
DATE: 10-2-11
5

NOTES:

1) INSTALLATION, MATERIALS AND DEVICES SHALL CONFORM TO UNION COUNTY PUBLIC WORKS SPECIFICATIONS AND REQUIREMENTS.

2) ALL PIPE TO BE RESTRAINT JOINT DIP FROM TAP TO BACKFLOW AND/OR FIRE VAULT.THE 1-1/2 & 2 INCH PIPE SHALL BE BRASS TO THE BACKFLOW. ALTERNATE (3 INCH VALVE AND RESTRAINT JOINT DIP IN LIEU OF BRASS)

3) FEES MUST BE PAID PRIOR TO INSTALLATION.

4) NO PVC PIPE SHALL BE USED WITHIN 5 FEET EACH END OF BACKFLOW PREVENTER.

5) 3 INCH & LARGER: CONTRACTOR INSTALLS APPROPIATE DIP LINE THROUGH VAULT AND SUPPLIES VAULT. UNION COUNTY WILL INSTALL METER AND BYPASS AT PREVAILING COSTS. CONTRACTOR TO INSTALL APPROPRIATE SIZE RPZ.

6) FIRE DEPARTMENT CONNECTION (FDC) MUST BE WITHIN 100 FT MAX OF PUBLIC HYDRANT PER FIRE CODE.

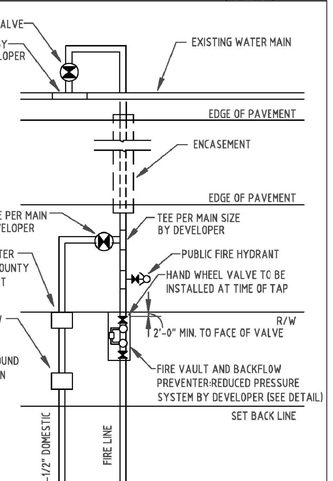


UNION COUNTY PUBLIC WORKS DEPARTMENT
UNION COUNTY, N.C.
STANDARD DETAIL
WATER CONNECTION
SCALE: N.T.S.
DATE: 10-17-08
22


MDV Engineering P-0883
C/O Ayer Design Group
215 Johnston Street
Rock Hill, SC 29730
Phone: 704-400-1044
Email:michael@mdveng.com


NORTH CAROLINA PROFESSIONAL SEAL 28274 ENGINEER MICHAEL D. NEUMAN 7-1-20

PROJECT

Arby's

RESTAURANT w/ DRIVE-THRU

#8821
1001 ASPINAL ST.
WAXHAW, NC 28173
(PROVIDENCE ROAD)

FOR

BRG Brumit Restaurant Group

BRUMIT RESTAURANT GROUP, LLC
P.O. BOX 15726
ASHEVILLE, NC 28813
PH: 828.274.5835

REVISIONS

DWG. NAME : 2020-104
DRAWN BY : MDN
DATE. : 5-26-20
SCALE: N.T.S

DETAIL SHEET

C.9

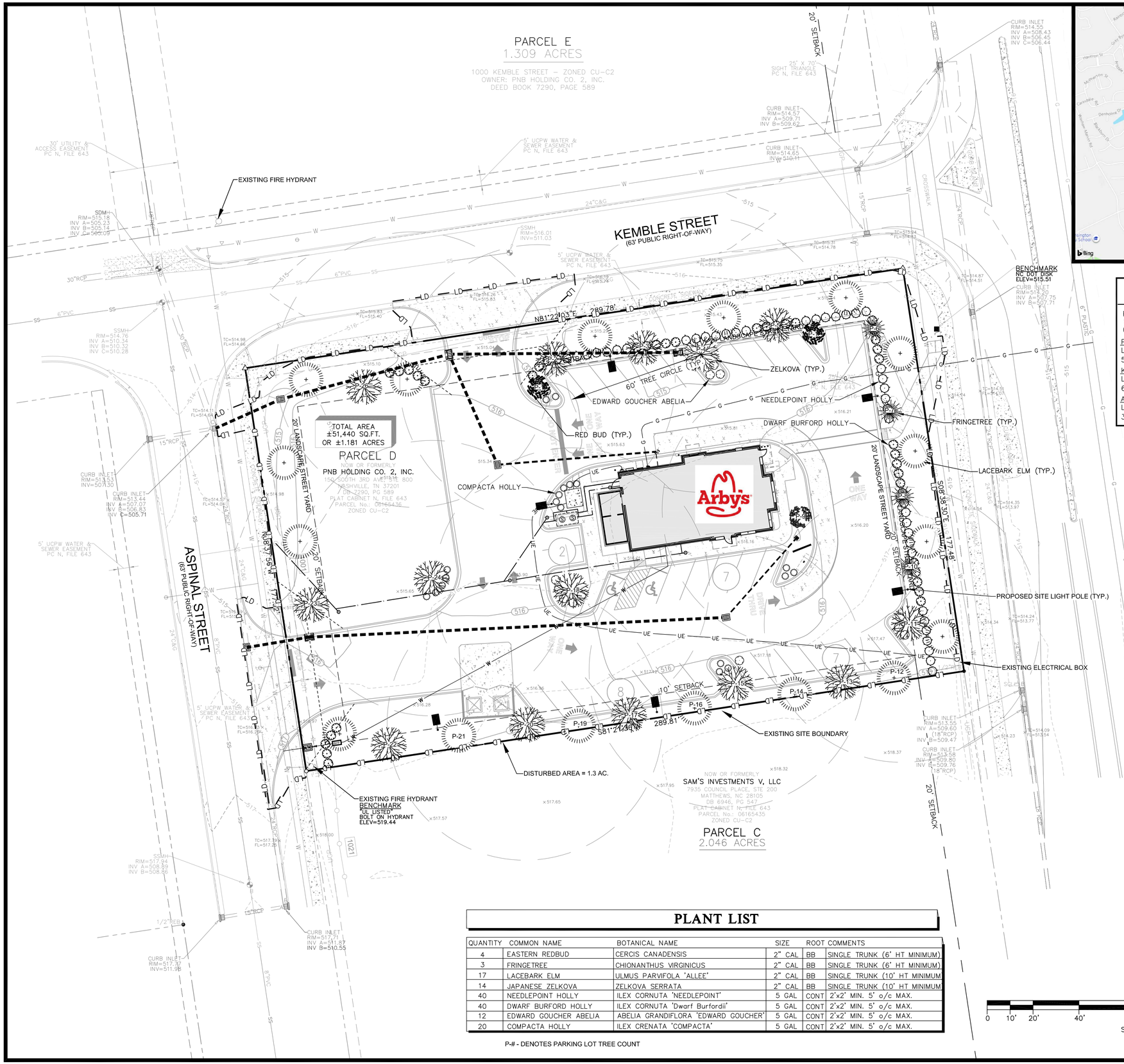


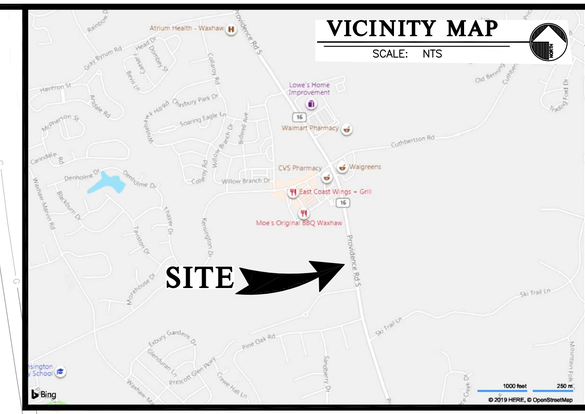


## CHAPTER. 9 - STREET LANDSCAPE REQUIREMENTS

PULBIC STREET LANDSCAPE AREA REQUIREMENTS:
1 MEDIUM OR LARGE MATURING TREE/40 LF OF LANDSCAPE STRIP OR (SMALL MATURING TREES SHALL BE INSTALLED INSIDE ROW, IF REQUIRED)

PROVIDENCE ROAD FRONTAGE
LENGTH = 178 LF (5 TREES RQD.)
5 TREES PROVIDED

KEMBLE STREET FRONTAGE
LENGTH: 290'–60'(Driveway & Sight Triangles) = 230 LF (6 TREES RQD.)
6 TREES PROVIDED

ASPINAL STREET FRONTAGE
LENGTH: 177'–66'(Driveway & Sight Triangles) = 114 LF (3 TREES RQD.)
3 TREES PROVIDED

## CHAPTER. 9
## TOWN OF WAXHAW PARKING LOT PLANTING REQUIREMENTS

VECHICLE USE AREA = 26,295 S.F.
ONE DECIDUOUS TREE & FOUR SHRUBS PER 10,000 S.F. OF VEHICULAR USE AREA IS REQUIRED. ALL PARKING SPACES MUST BE WITHIN 60 FEET OF A TREE TRUNK.

1 TREE/1,000 S.F. V.U.A. REQUIRED
26,295 S.F./1,000 SF = 26 TREES REQUIRED;
19 LARGE/MEDIUM MATURING TREES PROVIDED
7 SMALL MATURING TREES PROVIDED

4 SHRUBS/1,000 S.F. V.U.A. REQUIRED
26,574 S.F./1,000 SF = 106 SHRUBS REQUIRED;
112 SHRUBS PROVIDED

## TREES PER PARKING SPACE REQUIREMENTS

ALL PARKING SPACES ARE WITHIN THE REQUIRED 60' MINIMUM RADIUS OF A TREE.

**SEE SHEET LA.2 FOR PLANTING NOTES AND DETAILS.**

## PLANT LIST

| QUANTITY | COMMON NAME | BOTANICAL NAME | SIZE | ROOT | COMMENTS |
|---|---|---|---|---|---|
| 4 | EASTERN REDBUD | CERCIS CANADENSIS | 2" CAL | BB | SINGLE TRUNK (6' HT MINIMUM) |
| 3 | FRINGETREE | CHIONANTHUS VIRGINICUS | 2" CAL | BB | SINGLE TRUNK (6' HT MINIMUM) |
| 17 | LACEBARK ELM | ULMUS PARVIFOLA 'ALLEE' | 2" CAL | BB | SINGLE TRUNK (10' HT MINIMUM |
| 14 | JAPANESE ZELKOVA | ZELKOVA SERRATA | 2" CAL | BB | SINGLE TRUNK (10' HT MINIMUM |
| 40 | NEEDLEPOINT HOLLY | ILEX CORNUTA 'NEEDLEPOINT' | 5 GAL | CONT | 2'x2' MIN. 5' o/c MAX. |
| 40 | DWARF BURFORD HOLLY | ILEX CORNUTA 'Dwarf Burfordii' | 5 GAL | CONT | 2'x2' MIN. 5' o/c MAX. |
| 12 | EDWARD GOUCHER ABELIA | ABELIA GRANDIFLORA 'EDWARD GOUCHER' | 5 GAL | CONT | 2'x2' MIN. 5' o/c MAX. |
| 20 | COMPACTA HOLLY | ILEX CRENATA 'COMPACTA' | 5 GAL | CONT | 2'x2' MIN. 5' o/c MAX. |

P-# - DENOTES PARKING LOT TREE COUNT

0 10' 20' 40' 40'
SCALE: 1"= 20'

*LEGEND*

PROPERTY LINE
ADJACENT PROPERTY LINE
EASEMENT LINE
SILT FENCE
BUILDING SETBACK LINE — BSL
EXISTING CONTOUR LINE — 517
FUTURE UNDERGROUND POWER LINE — UGP
SANITARY SEWER LINE — SS
STORM SEWER LINE — 18" RCP
IRON PIN FOUND (SIZE AND TYPE AS NOTED)
STATE DOT MONUMENT
1/2" REBAR W/ CAP SET
NAIL & DISK SET
TRAFFIC SIGNAL JUNCTION BOX — SGL
WATER VALVE
WATER METER
FIRE HYDRANT
STORM MANHOLE — SDMH
DROP INLET
SANITARY MANHOLE — SSMH
CLEANOUT — CO
SIGN
FUTURE LIGHT POLE
STREET ADDRESS — 1001
CONCRETE
GRAVEL
SPOT ELEVATION — × 515.81


MDV Engineering P-0883
C/O Ayer Design Group
215 Johnston Street
Rock Hill, SC 29730
Phone: 704-400-1044
Email:michael@mdveng.com


NORTH CAROLINA PROFESSIONAL SEAL 28274 7-1-20 ENGINEER MICHAEL D. NEUMAN

PROJECT

Arby's

RESTAURANT
w/ DRIVE-THRU
#8821
1001 ASPINAL ST.
WAXHAW, NC 28173
(PROVIDENCE ROAD)

FOR

BRG Brumit Restaurant Group
BRUMIT RESTAURANT GROUP, LLC
P.O. BOX 15726
ASHEVILLE, NC 28813
PH: 828.274.5835

REVISIONS

DWG. NAME : 2020–104
DRAWN BY : MDN
DATE. : 5–26–20
SCALE: 1:20

**LANDSCAPE PLAN**

# LA.1

NOTES:

1. REMOVE WIRE AND NYLON TWINE FROM BALL AND CANOPY.
2. SOAK ROOT BALL AND PLANT PIT IMMEDIATELY AFTER INSTALLATION.
3. STAKING IS REQUIRED FOR ALL TREES IN R.O.W.. STAKES AND STRAPPING ARE TO BE REMOVED ONE YEAR AFTER PLANTING
4. REMOVE EXCESS SOIL FROM SITE AND DISPOSE OF IN A LEGAL MANNER.
5. RESEED UNMULCHED, DISTURBED AREAS.
6. MULTI–STEM TREES ARE NOT ALLOWED FOR STREET TREES AND ARE DISCOURAGE FOR ANY APPLICATION.

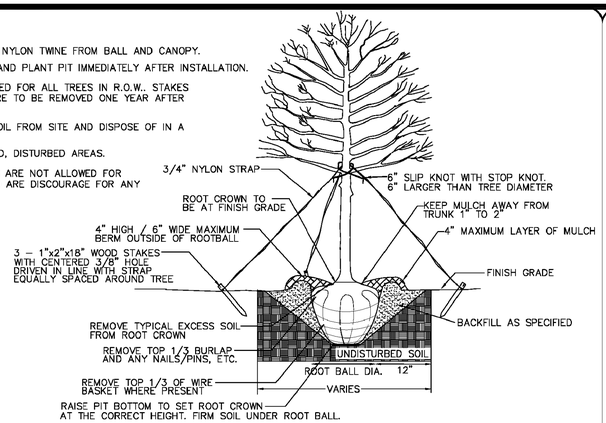


ALL TREES SHALL MEET AMERICAN STANDARD FOR NURSERY STOCK (ANSI Z60.1–2004)

| FOR EXAMPLE: CALIPER | HEIGHT (RANGE) | MAX. HEIGHT | MIN. ROOT BALL DIA. | MIN. ROOT BALL DEPTH |
|---|---|---|---|---|
| 2" | 12–14' | 16' | 24" | 16" |
| 3" | 14–16' | 18' | 32" | 21" |

NOT TO SCALE

| TOWN OF WAXHAW LAND DEVELOPMENT STANDARDS | TREE PLANTING (FOR SINGLE AND MULTI–STEM TREES) | STD. NO. 600.1 | REV. |
|---|---|---|---|

NOTES:

1. SCARIFY ROOT MASS OF CONTAINERIZED PLANT MATERIAL.
2. INSTALL CONTAINERIZED PLANTS AT FINSHED GRADE
3. TAMP PLANTING MIX FIRMLY AS PIT IS FILLED AROUND EACH PLANT BALL.
4. OMIT COLLAR AROUND EACH SHRUB WHEN IRRIGATION SYSTEM IS PRESENT.
5. SOAK EACH PLANT BALL AND PIT IMMEDIATELY AFTER INSTALLATION.

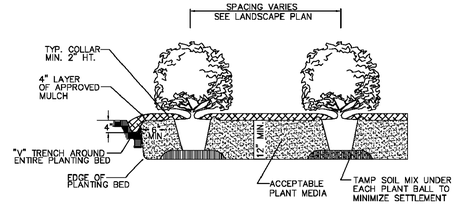


TYPICAL PLANTING BED DETAIL

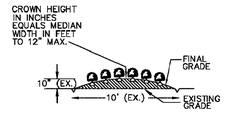


TYPICAL BED CROWNING

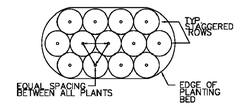


TYPICAL PLANTING BED PLAN

| TOWN OF WAXHAW LAND DEVELOPMENT STANDARDS | SHRUB PLANTING BED | STD. NO. 610.1 | REV. |
|---|---|---|---|

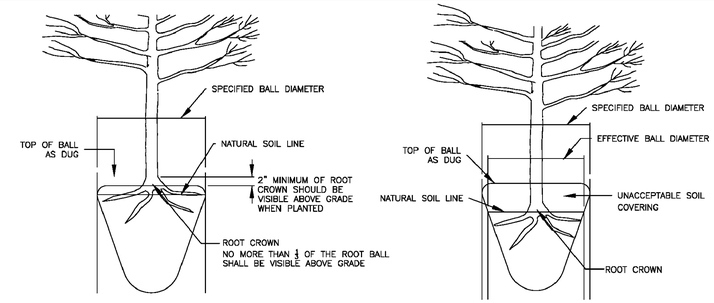


ACCEPTABLE CONDITION
(AS DELIVERED)

UNACCEPTABLE CONDITION
(AS DELIVERED)

NOTE:

1. A ROOT FLARE EXCAVATION FOR ALL TREES SPECIFIED WILL BE DONE BY THE ARBORIST TO ENSURE THAT TREES WERE NOT PLANTED/GROWN TOO DEEPLY AT SOURCE (NURSERY). LANDSCAPE CONTRACTOR SHALL HAVE SUPPLIER MARK GROUND LEVEL LINE ABOVE ROOT BALL. IF ARBORIST DETERMINES THAT THERE IS EXCESSIVE SOIL OVER THE ROOT CROWN, THESE TREES WILL BE REJECTED.
2. NO TREES ARE TO BE PLANTED UNTIL THE ARBORIST HAS INSPECTED AND APPROVED EACH TREE.

| TOWN OF WAXHAW LAND DEVELOPMENT STANDARDS | ROOT FLARE DEPTHS (TREE ROOT BALL CONDITION ON TREES FROM SUPPLIERS) | STD. NO. 614.1 | REV. |
|---|---|---|---|

PLANTINGS IN STREET RIGHT–OF–WAY

GENERAL NOTES

1. TREE GRATES AND ASSOCIATED IRRIGATION SYSTEMS ARE REQUIRED AT VARIOUS LOCATIONS IN THE DOWNTOWN AREAS TO COMPLY WITH THE DOWNTOWN STREETSCAPE GUIDELINES AND OTHER ZONING REQUIREMENTS. ALL OTHER INSTALLATIONS OF IRRIGATION SYSTEMS WITHIN THE RIGHT–OF–WAY OF TOWN OR STATE MAINTAINED STREETS REQUIRE AN ENCROACHMENT AGREEMENT EXECUTED THROUGH TOWN OR NCDOT. THE TOWN'S ENCROACHMENT AGREEMENT REVIEW/APPROVAL PROCESS MAY INCLUDE ADDITIONAL REQUIREMENTS. CONTACT TOWNS DEVELOPMENT SERVICES DEPARTMENT FOR ADDITIONAL INFORMATION REGARDING COST, SUBMITTAL, AND LIABILITY INSURANCE COVERAGE REQUIREMENTS.
2. AN INSPECTION SCHEDULE IS NEEDED FOR TREES THAT WILL BE PLANTED IN THE STREET RIGHT OF WAY DUE TO ZONING OR OTHER REQUIREMENTS. LANDSCAPE INSPECTION INCLUDE THE FOLLOWING:
   SUBDRAINAGE INSPECTION
   TREE PIT/WELL OR PLANTING STRIP INSPECTION
   SOIL MIX APPROVALS/INSPECTIONS
   TREE APPROVALS/INSPECTIONS – PRIOR TO PURCHASING THE TREES, TO BE MADE BY THE ARBORIST.
   THIS MAY INCLUDE PHOTO APPROVAL OR PARTICIPATION IN TAGGING THE TREES.
   TREE PLANTING INSPECTION
   IRRIGATION INSPECTION
   FINAL WALK THROUGH

ALL OF THE ABOVE INSPECTIONS WILL BE PERFORMED BY THE ARBORIST EXCEPT FOR THE TREE APPROVALS AS NOTED.

| TOWN OF WAXHAW LAND DEVELOPMENT STANDARDS | TREE PLANTING–NOTES (DRAINAGE AND INSPECTION) | STD. NO. 615.1 | REV. |
|---|---|---|---|

1. ALL PLANTS MUST BE HEALTHY, VIGOROUS MATERIAL, FREE OF PESTS & DISEASE.
2. ALL PLANTS MUST BE CONTAINER GROWN OR BALLED & BURLAPPED.
3. ALL TREES MUST BE STRAIGHT TRUNKED, WITH SINGLE DOMINENT LEADER, FULL HEADED & MEET ALL REQUIREMENTS SPECIFIED IN PLANT LIST.
4. ALL PLANTS ARE SUBJECT TO REJECTION BY THE OWNER BEFORE, DURING, & AFTER INSTALLATION.
5. STAKE TREES AS NECESSARY.
6. ALL PLANTS & PLANT BEDS MUST BE COMPLETELY MULCHED WITH HARDWOOD MULCH. PINESTRAW MULCH IS NOT PERMITTED. LANDSCAPE FABRIC, SUCH AS TYPAR OR WEED-BLOCK, MUST BE INSTALLED IN PLANTING AREAS PRIOR TO MULCHING.
7. PRIOR TO CONSTRUCTION, THE CONTRACTOR IS RESPONSIBLE FOR LOCATING ALL UNDERGROUND UTILITIES & SHALL AVOID DAMAGE TO ALL UTILITIES DURING THE COURSE OF THE WORK. THE CONTRACTOR IS RESPONSIBLE FOR REPAIRING ANY & ALL DAMAGE TO UTILITIES, STRUCTURES, SITE APPURTENANCES, ETC. WHICH OCCURS AS A RESULT OF THE LANDSCAPE CONSTRUCTION, AT NO ADDITIONAL COST TO OWNER.
8. THE CONTRACTOR IS RESPONSIBLE FOR VERIFYING ALL QUANTITIES SHOWN ON THESE PLANS, BEFORE PRICING THE WORK. CONTRACTOR SHALL NOTIFY LANDSCAPE ARCHITECT OF ANY DISCREPANCIES IMMEDIATELY.
9. THE CONTRACTOR IS RESPONSIBLE FOR MAINTAINING, IN FULL, ALL PLANTING (INCLUDING WATER, SPRAYING, MULCHING, MOWING, FERTILIZING, ETC.) OF PLANTING AREAS AND LAWNS UNTIL THE JOB IS ACCEPTED IN FULL, BY THE THE OWNER.
10. THE OWNER WILL CONTRACT FOR A PROGRAM OF LANDSCAPE MAINTENANCE SERVICES THROUGHOUT THE ONE (1) YEAR GUARANTEE PERIOD UNLESS OTHERWISE DETERMINED.
11. THE CONTRACTOR SHALL COMPLETELY GUARANTEE ALL PLANT MATERIAL FOR A PERIOD OF ONE (1) YEAR BEGINNING AT THE DATE OF TOTAL ACCEPTANCE AND SHALL PROMPTLY MAKE ALL REPLACEMENTS BEFORE OR AT THE END OF THE GUARANTEE PERIOD (AS PER DIRECTION OF THE LANDSCAPE ARCHITECT).
12. THE LANDSCAPE ARCHITECT WILL APPROVE THE STAKED LOCATION OF ALL PLANT MATERIAL PRIOR TO INSTALLATION, IF REQUESTED BY OWNER.
13. DO NOT ALLOW AIR POCKETS TO FORM WHEN BACKFILLING.
14. WATER TREES AFTER PLANTING.
15. MAINTAIN ORIGINAL GRADE OR SLIGHTLY ABOVE GRADE AT THE TREE BASE.
16. DO NOT BREAK ROOT BALL.
17. SET TRUNK PLUMB.
18. AFTER BEING DUG AT THE NURSERY SOURCE, ALL TREES IN LEAF SHALL BE ACCLIMATED FOR TWO WEEKS UNDER A MIST SYSTEM PRIOR TO INSTALLATION.
19. ANY PLANT MATERIAL WHICH DIES, TURNS BROWN, DEFOLIATES OR FAILS TO GERMINATE PRIOR TO TOTAL ACCEPTANCE OF THE WORK SHALL BE PROMPTLY REMOVED FROM THE SITE & REPLACED WITH MATERIAL OF THE SAME SPECIES, QUANTITY, SIZE AND MEETING ALL PLANT LIST SPECIFICATIONS AT NO COST TO THE OWNER.
20. STANDARDS SET FORTH IN THE LATEST EDITION OF "AMERICAN STANDARDS FOR NURSERY STOCK" REPRESENT GUIDELINE SPECIFICATIONS ONLY AND CONSTITUTE MINIMUM QUALITY REQUIREMENTS FOR PLANT MATERIAL OF THE SAME SPECIES, QUANTITY, SIZE AND MEETING ALL PLANT LIST SPECIFICATIONS.
21. IF SUFFICIENT ADDITIONAL TOPSOIL IS AVAILABLE, THE CONTRACTOR SHALL BACKFILL THE PARKING LOT ISLANDS WITH 100% TOPSOIL. PLANTERS SHALL BE FREE OF DELETERIOUS MATERIAL AND SOIL SHALL BE SUITABLE FOR PLANTING. ALL ROCKS AND DEBRIS SHALL BE REMOVED FROM PLANTING BEDS, INCLUDING SODDED AREAS, PRIOR TO INSTALLATION.
22. THE CONTRACTOR HAS THE COMPLETE RESPONSIBILITY FOR THE HANDLING OF ALL SURPLUS EXCAVATED MATERIALS INCLUDING THE REMOVAL OF ANY EXCESS MATERIALS FROM THE PROJECT SITE. THE CONTRACTOR SPECIFICALLY UNDERSTANDS AND AGREES THAT DUE TO THE SEQUENCE OF THE WORK, HE MAY NEED TO RETAIN SELECT EXACERBATED MATERIALS ON SITE TO MEET LATER NEEDS OF THE PROJECT. IT SHALL BE THE SOLE RESPONSIBILITY OF THE CONTRACTOR AS TO ANY DECISIONS MADE TO HAUL OFF EXCESS MATERIAL OR TO RETAIN MATERIAL ON SITE FOR LATER USE. THE CONTRACTOR SHALL HAVE THE COMPLETE RESPONSIBILITY FOR HAVING ADEQUATE, SUITABLE MATERIAL ON-SITE TO REPLACE UNSUITABLE MATERIAL OR TO OTHERWISE CONFORM TO THE REQUIREMENTS OF THE CONTRACT DOCUMENTS.
23. THE CONTRACTOR SHALL REMOVE & DISPOSE OF ALL PLANT MATERIAL EXISTING ON SITE THAT DOES NOT CONFORM WITH THE LANDSCAPE PLAN. ALL LANDSCAPED AREAS SHALL BE TREATED AS SPECIFIED ON THE LANDSCAPE PLAN OR AS DIRECTED BY THE LANDSCAPE ARCHITECT. THIS SHALL INCLUDE ALL GRASS AREAS USED FOR EROSION CONTROL PURPOSES.
24. AREAS TO BE SODDED SHALL BE RAKED SMOOTH AND CONFORM TO PROPOSED GRADES. SOD SHALL BE ROLLED TO PROVIDE A CONSISTENTLY EVEN SURFACE.
25. ALL GRASSED AREAS TO BE SODDED. LAWN AREAS SHOWN ON PLAN AND DISTURBED RIGHT-OF-WAY AREAS ALSO TO BE SODDED.

GENERAL LANDSCAPE NOTES

# LANDSCAPE NOTES AND DETAILS


MDV Engineering P-0883
C/O Ayer Design Group
215 Johnston Street
Rock Hill, SC 29730
Phone: 704-400-1044
Email:michael@mdveng.com


NORTH CAROLINA PROFESSIONAL SEAL 28274 ENGINEER MICHAEL D. NEUMAN 7-1-20

PROJECT

Arby's

RESTAURANT w/ DRIVE-THRU

#8821
1001 ASPINAL ST.
WAXHAW, NC 28173
(PROVIDENCE ROAD)

FOR

BRG Brumit Restaurant Group

BRUMIT RESTAURANT GROUP, LLC
P.O. BOX 15726
ASHEVILLE, NC 28813
PH: 828.274.5835

REVISIONS

DWG. NAME : 2020–104
DRAWN BY : MDN
DATE. : 5–26–20
SCALE: N.T.S

LANDSCAPE DETAILS

LA.2

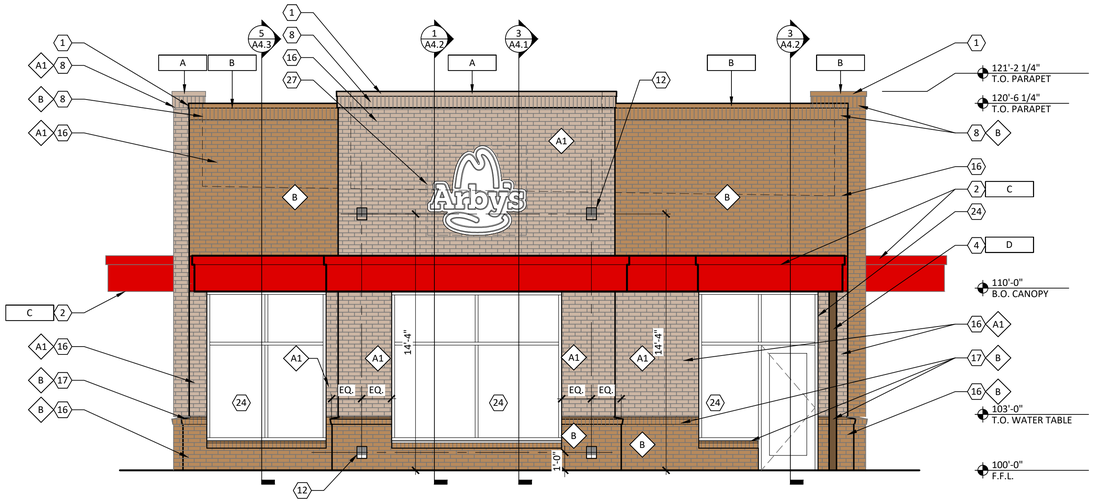


1 A2.1 FRONT ELEVATION

1/4" = 1'-0"

# CODED NOTES

(X) (ALL CODED NOTES MAY NOT BE USED)

1. PRE-FINISHED METAL COPING.
2. PRE-FABRICATED METAL CANOPY/ACCENT BAND.
3. CENTER DRIVE THRU CANOPY ON DRIVE THRU WINDOW.
4. PRE-FABRICATED METAL POST FOR CANOPY.
5. ARBY'S SIGNAGE, REFER TO SIGNAGE VENDOR DRAWINGS.
6. PAINT DOOR AND FRAME.
7. NOT USED.
8. BRICK CORNICE, SOLDIER COURSE.
9. FAUX WINDOW.
10. BRICK VENEER ACCENT BAND, ALIGN WITH METAL ACCENT BAND.
11. DRIVE THRU WINDOW.
12. WALL MOUNTED LIGHT FIXTURE.
13. PAINT BOLLARD.
14. WALL PACK, REFER TO ELECTRICAL DRAWING.
15. ROOF LADDER, MOUNT DIRECTLY TO SHEATHING. PAINT "K"
16. BRICK VENEER.
17. BRICK ROWLOCK SILL. USE SOLID BRICK @ OUTSIDE CORNERS & JAMBS. REFER TO DETAIL 3/A2.1.
18. SOLDIER COURSE BRICK.
19. ELECTRICAL EQUIPMENT.
20. GAS METER.
21. GREASE OUTLET.
22. Co2 HOOKUP.
23. COOLER/FREEZER. PRE-FINISHED TO MATCH PAINT "K".
24. ALUMINUM STOREFRONT.
25. PREFABRICATED SCUPPER. MATCH COLOR TO ADJACENT WALL COLOR. REFER TO DETAIL 7/A1.3.
26. CONTINUE BRICK VENEER BEHIND ELECTRIC EQUIPMENT. COORDINATE SIZE WITH ELECTRICIAN. DO NOT INSTALL ROWLOCK BEHIND ELECTRICAL EQUIPMENT.
27. ARBY'S HAT SIGNAGE. MOUNT ON BRICK WALL. REFER TO SIGNAGE VENDOR'S DRAWINGS.
28. ARBY'S LETTER SIGNAGE. MOUNT ON EIFS WALL. REFER TO SIGNAGE VENDOR'S DRAWINGS.
29. PROVIDE A CLEAR UNOBSTRUCTED 30"X30" LANDING AREA FOR LADDER

ZONING ADMINISTRATOR HAS WAIVED THE REQUIREMENTS OF UDO SECTION 20.2.2.E.1.D AND UDO SECTION 20.2.2.E.1.F.

# FINISH SCHEDULE

| MARK | MANUFACTURER | DESCRIPTION | NOTES |
|---|---|---|---|
| FINISHES | | | |
| A1 | GENERAL SHALE | BASILICA | TEXTURE: VELOUR<br>GROUT: CEMEX GRAY TYPE N 1000 |
| A2 | NOT USED | --- | --- |
| B | BELDEN BRICK | 8601 DARK | TEXTURE: SMOOTH<br>GROUT: CEMEX 36-A MOCHA, TYPE N |
| C | NOT USED | --- | --- |
| D | SHERWIN WILLIAMS | SW #6869<br>STOP | SATIN FINISH |
| E | NOT USED | --- | --- |
| F | NOT USED | --- | --- |
| G | SHERWIN WILLIAMS | SW #2808<br>ROOKWOOD DARK BROWN | SATIN FINISH |
| H | NOT USED | --- | --- |
| J | NOT USED | --- | --- |
| K | SHERWIN WILLIAMS | SW #7538<br>TAMARIND | SATIN FINISH |
| METALS | | | |
| A | EXCEPTIONAL METALS/ DURO-LAST | TWO-PIECE SNAP-ON METAL COPING<br>LIGHT STONE/ DURO-LAST #SR.70/TE.87 | FOR USE WITH DURO-LAST ROOFING SYSTEM DETAIL FA3110 |
| B | EXCEPTIONAL METALS/ DURO-LAST | TWO-PIECE SNAP-ON METAL COPING<br>MIDNIGHT BRONZE/ DURO-LAST #SR.26/TE.87 | FOR USE WITH DURO-LAST ROOFING SYSTEM DETAIL FA3110 |
| C | PRE-FABRICATED CANOPY/BAND | PRODUCT CODE: 9940-30198R<br>PRODUCT NAME: FC SD RAL 3000 FLAME RED | --- |
| D | PRE-FABRICATED POST | PRODUCT CODE: 9840-80957R PRODUCT<br>NAME: FC SD RAL 8017 CHOC. BROWN | --- |

A. PAINT ALL EXPOSED GAS PIPE, ROOF ACCESS LADDER, ETC. TO MATCH ADJACENT EXTERIOR WALL SURFACE. DO NOT PAINT ELECTRIC OR GAS SERVICE EQUIPMENT.

B. PROVIDE TEMPORARY MASKING OF EXPOSED STAINLESS STEEL DURING ACID WASHING OF MASONRY.

C. PROVIDE SOLID MASONRY UNITS AT THE ENDS OF JAMBS , SILLS, ETC.

D. TO HELP PREVENT EFFLORESCENCE ALL MASONRY UNITS ARE TO BE MANUFACTURED WITH INTEGRAL WATER REPELLANT. WATER REPELLENT ADMIXTURE IS TO BE MIXED IN AND PRE-WASHED SAND IS TO BE USED IN ALL MORTAR MIXES.

E. MAKE SURE THAT WALL WEEPS AND FLASHING ARE INSTALLED CORRECTLY. DO NOT BLOCK WEEPS.

F. REFER TO SHEET A8.2 FOR TEMPERED GLASS LOCATIONS.

G. ALUMINUM STOREFRONT TO BE DARK BRONZE.

H. ALL GLAZING TO BE 1" INSULATED GLAZING.

I. BASIS OF DESIGN FOR THE EIFS WALL SYSTEM IS DRYVIT OUTSULATION PLUS MD. EIFS WALL SYSTEM IS 2" THICK UNLESS NOTED OTHERWISE. INSTALL EIFS PRODUCT IN STRICT ACCORDANCE WITH MANUFACTURER'S SPECIFICATIONS AND DETAILS.

J. SIGNAGE IS SHOWN FOR REFERENCE ONLY. FINAL SIZE, LOCATION AND QUANTITY TO BE DETERMINED BY SIGNAGE VENDOR. SIGNAGE VENDER SHALL PERMIT ALL SIGNS UNDER SEPARATE COVER.

K. REFER TO ELECTRICAL DRAWINGS FOR EXTERIOR LIGHTING SPECIFICATIONS.

L. PAINT ALL EXPOSED BRICK LINTELS TO MATCH ADJACENT BRICK.

M. ALL WALL MOUNTED LIGHT FIXTURES TO BE SET IN CONTINUOUS BED OF CAULK AND THEN SHALL BE SEALED TO WALL WITH SEPARATE BEAD OF CAULK. CAULK TO MATCH ADJACENT SURFACE.

N. PAINT EIFS WALL BEHIND ACCENT BAND RED. EXPOSED EIFS EDGE BELOW ACCENT BAND TO MATCH METAL.

O. ALL BRICK VENEER SHALL BE A RUNNING BOND, U.N.O. ALL BRICK SHALL BE INSTALLED FLUSH. U.N.O. (EXCEPTIONS INCLUDE: ROWLOCK SILL, SOLDIER COURSE HEADER AT DRIVE THRU WINDOW AND BRICK CORNICE)

P. THRU-WALL FLASHING SHALL BE PRE-FINISHED TO MATCH STOREFRONT (DARK BRONZE).

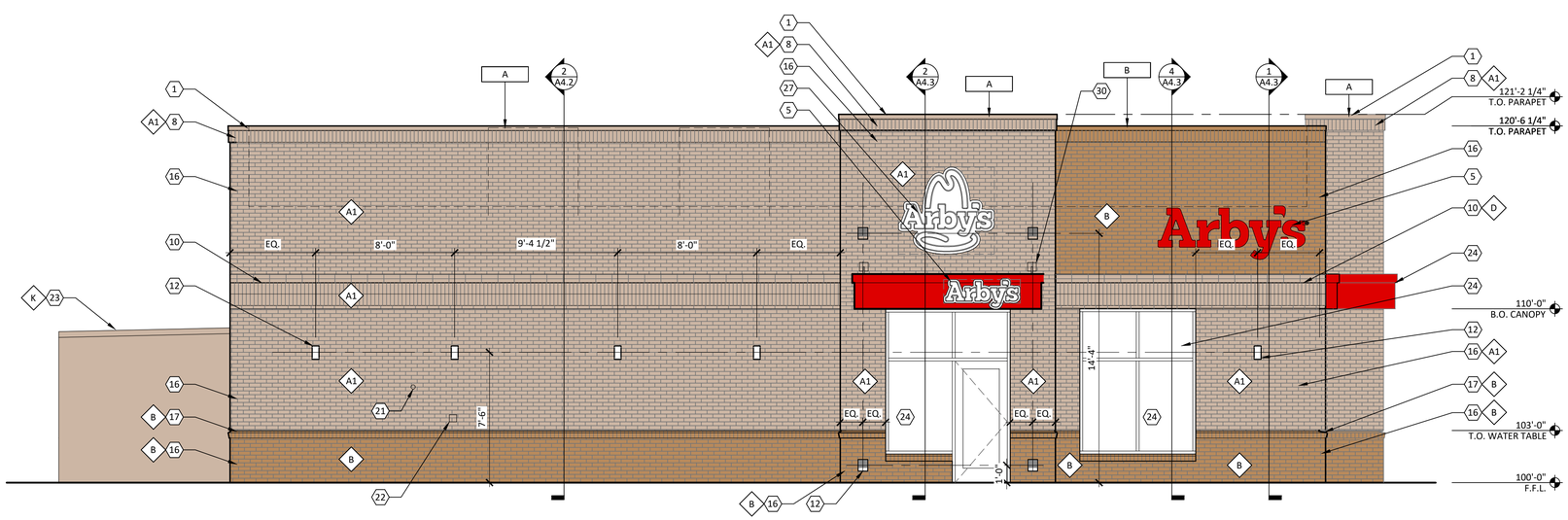


2 A2.1 SIDE ELEVATION

1/4" = 1'-0"

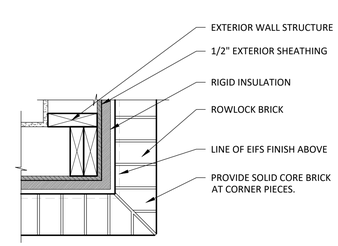


3 A2.1 DETAIL @ BRICK CORNER

1 1/2" = 1'-0"

NOT FOR CONSTRUCTION, FOR REFERENCE ONLY


r e d
architecture + planning
589 W Nationwide Boulevard
Suite B
Columbus, Ohio 43215
tel: 614.487.8770
fax: 614.487.8777



PROPRIETARY INFORMATION NOTICE:

THESE PROTOTYPICAL DOCUMENTS MAY REQUIRE REVISIONS TO CONFORM TO LOCAL, STATE, AND FEDERAL CODES, ORDINANCES OR OTHER CONDITIONS. THE DESIGN CONCEPTS EMBODIED IN THESE DOCUMENTS ARE SPECIFICALLY FOR THIS PROJECT. INFORMATION CONTAINED HEREIN REMAINS THE SOLE PROPERTY OF ARBY'S RESTAURANT GROUP, IS CONFIDENTIAL AND PROPRIETARY AND IS NOT TO BE COPIED, REPRODUCED, DISCLOSED OR OTHERWISE TRANSFERED TO OTHER PARTIES IN ANY FORM WHATSOEVER WITHOUT THE EXPRESS WRITTEN CONSENT OF ARBY'S RESTAURNAT GROUP.

Copyright 2020 by Arby's Restaurant Group


ARBY'S RESTAURANT GROUP
INSPIRE DUAL REGULAR 40 - REVERSE
NC-16 PROVIDENCE RD.
WAXHAW, NC 28173

FOR
BRUMIT RESTAURANT GROUP - Mitch Hatley
P.O.BOX 15726 ASHEVILLE, NC 28813

PROJECT NUMBER: ARF173

| ISSUE | DATE |
|---|---|
| SD | JUN 10, 2020 |

EXTERIOR ELEVATIONS

SHEET: A2.1

6/24/2020 4:29 PM

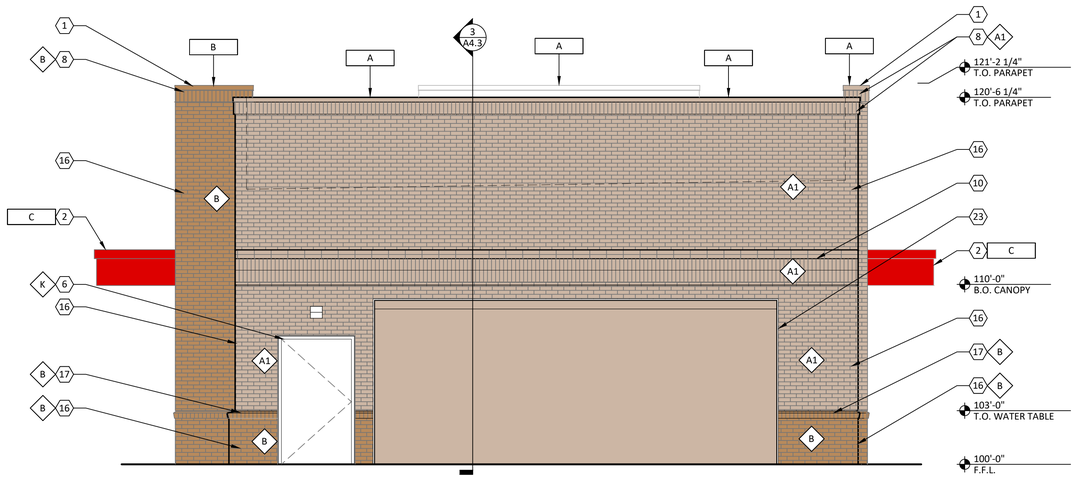


1 A2.2 REAR ELEVATION

1/4" = 1'-0"

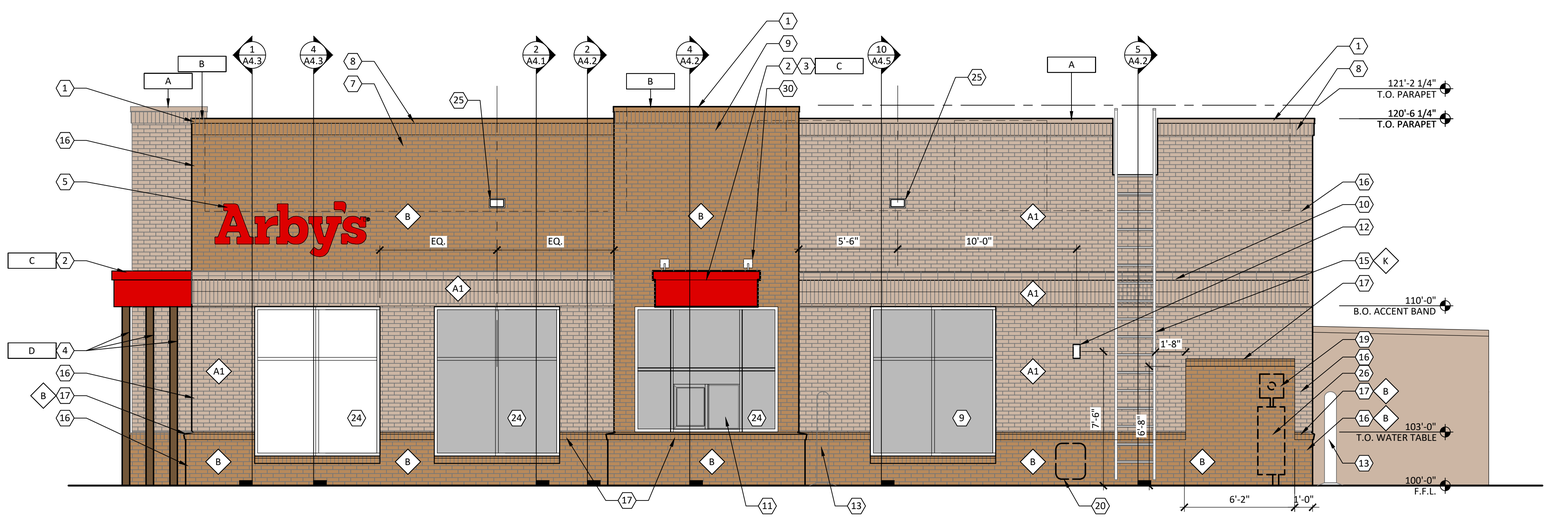


2 A2.2 SIDE ELEVATION

1/4" = 1'-0"

# CODED NOTES

(X) (ALL CODED NOTES MAY NOT BE USED)

1. PRE-FINISHED METAL COPING.
2. PRE-FABRICATED METAL CANOPY/ACCENT BAND.
3. CENTER DRIVE THRU CANOPY ON DRIVE THRU WINDOW.
4. PRE-FABRICATED METAL POST FOR CANOPY.
5. ARBY'S SIGNAGE, REFER TO SIGNAGE VENDOR DRAWINGS.
6. PAINT DOOR AND FRAME.
7. NOT USED.
8. BRICK CORNICE, SOLDIER COURSE.
9. FAUX WINDOW.
10. BRICK VENEER ACCENT BAND, ALIGN WITH METAL ACCENT BAND.
11. DRIVE THRU WINDOW.
12. WALL MOUNTED LIGHT FIXTURE.
13. PAINT BOLLARD.
14. WALL PACK, REFER TO ELECTRICAL DRAWING.
15. ROOF LADDER, MOUNT DIRECTLY TO SHEATHING. PAINT "K"
16. BRICK VENEER.
17. BRICK ROWLOCK SILL. USE SOLID BRICK @ OUTSIDE CORNERS & JAMBS. REFER TO DETAIL 3/A2.1.
18. SOLDIER COURSE BRICK.
19. ELECTRICAL EQUIPMENT.
20. GAS METER.
21. GREASE OUTLET.
22. Co2 HOOKUP.
23. COOLER/FREEZER. PRE-FINISHED TO MATCH PAINT "K".
24. ALUMINUM STOREFRONT.
25. PREFABRICATED SCUPPER. MATCH COLOR TO ADJACENT WALL COLOR. REFER TO DETAIL 7/A1.3.
26. CONTINUE BRICK VENEER BEHIND ELECTRIC EQUIPMENT. COORDINATE SIZE WITH ELECTRICIAN. DO NOT INSTALL ROWLOCK BEHIND ELECTRICAL EQUIPMENT.
27. ARBY'S HAT SIGNAGE. MOUNT ON BRICK WALL. REFER TO SIGNAGE VENDOR'S DRAWINGS.
28. ARBY'S LETTER SIGNAGE. MOUNT ON EIFS WALL. REFER TO SIGNAGE VENDOR'S DRAWINGS.
29. PROVIDE A CLEAR UNOBSTRUCTED 30"X30" LANDING AREA FOR LADDER

ZONING ADMINISTRATOR HAS WAIVED THE REQUIREMENTS OF UDO SECTION 20.2.2.E.1.D AND UDO SECTION 20.2.2.E.1.F.


r e d
architecture + planning
589 W Nationwide Boulevard
Suite B
Columbus, Ohio 43215
tel: 614.487.8770
fax: 614.487.8777


PROPRIETARY INFORMATION NOTICE:

THESE PROTOTYPICAL DOCUMENTS MAY REQUIRE REVISIONS TO CONFORM TO LOCAL, STATE, AND FEDERAL CODES, ORDINANCES OR OTHER CONDITIONS. THE DESIGN CONCEPTS EMBODIED IN THESE DOCUMENTS ARE SPECIFICALLY FOR THIS PROJECT. INFORMATION CONTAINED HEREIN REMAINS THE SOLE PROPERTY OF ARBY'S RESTAURANT GROUP, IS CONFIDENTIAL AND PROPRIETARY AND IS NOT TO BE COPIED, REPRODUCED, DISCLOSED OR OTHERWISE TRANSFERED TO OTHER PARTIES IN ANY FORM WHATSOEVER WITHOUT THE EXPRESS WRITTEN CONSENT OF ARBY'S RESTAURNAT GROUP.


Copyright 2020 by Arby's Restaurant Group


NOT FOR CONSTRUCTION, FOR REFERENCE ONLY

ARBY'S RESTAURANT GROUP
INSPIRE DUAL REGULAR 40 - REVERSE
NC-16 PROVIDENCE RD.
WAXHAW, NC 28173
FOR
BRUMIT RESTAURANT GROUP - Mitch Hatley
P.O.BOX 15726 ASHEVILLE, NC 28813

PROJECT NUMBER: ARF173

| ISSUE | DATE |
|---|---|
| SD | JUN 10, 2020 |

EXTERIOR ELEVATIONS

SHEET: A2.2

6/24/2020 4:29 PM

FOR REFERENCE

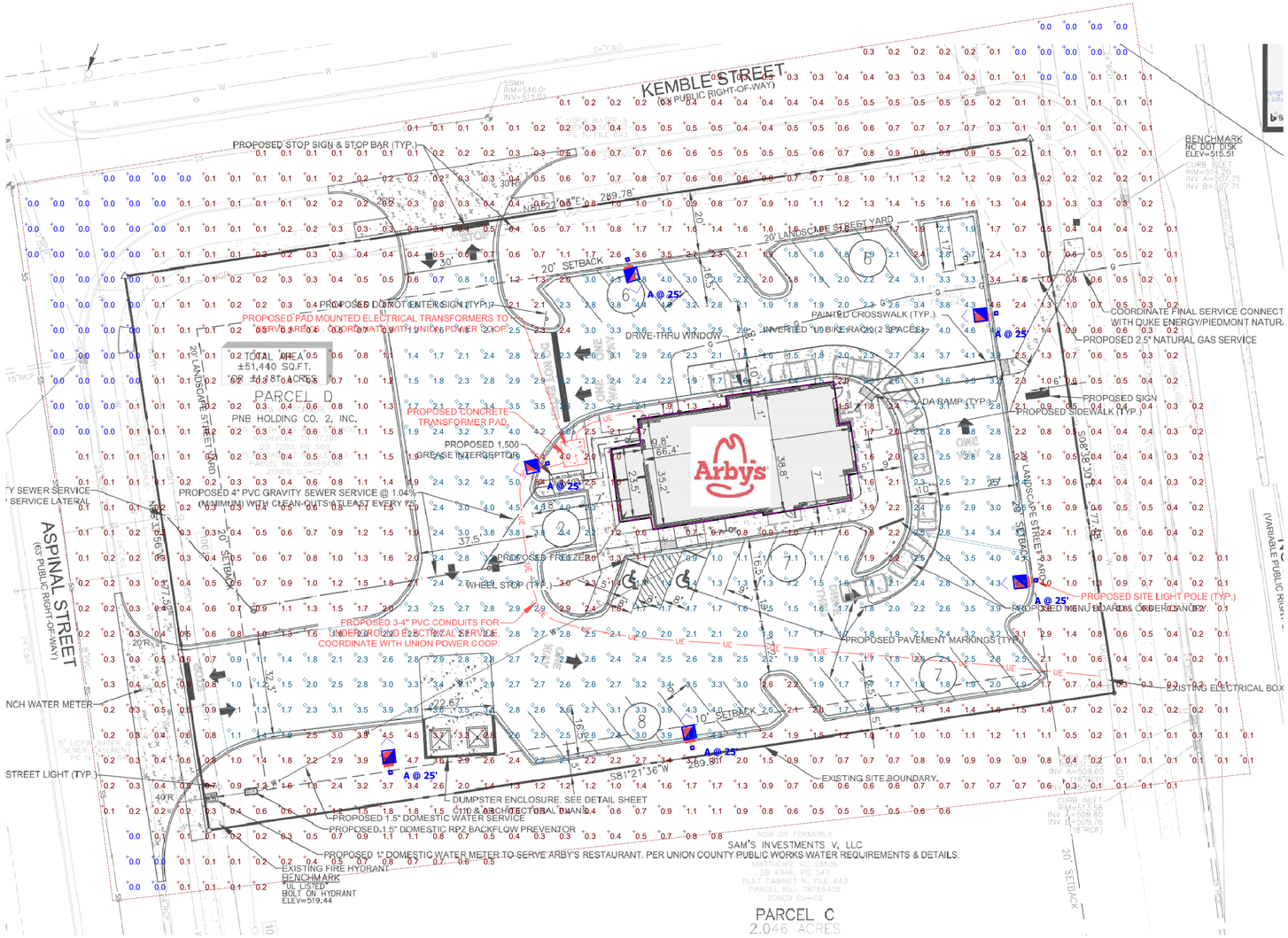


**Plan View**
Scale - 1" = 20ft

**Note**

1. Readings shown are based on a total LLF of as shown at grade. Data references the extrapolated performance projections in a 25c ambient based on 10,000 hrs of LED testing (per IESNA LM-80-08 and projected per IESNA TM-21-11).
2. Please refer to the "Plan View" for mounting heights.
3. Product information can be obtained at www.Acuitybrands.com

**Luminaire Locations**

| | | Location | | | | | | Aim | | |
|---|---|---|---|---|---|---|---|---|---|---|
| No. | Label | X | Y | Z | MH | Orientation | Tilt | X | Y | Z |
| 2 | A | -123.93 | 287.34 | 25.00 | 25.00 | 164.17 | 0.00 | -123.58 | 286.14 | 0.00 |
| 3 | A | -7.40 | 270.35 | 25.00 | 25.00 | 264.36 | 0.00 | -8.65 | 270.23 | 0.00 |
| 4 | A | -103.44 | 132.98 | 25.00 | 25.00 | 348.50 | 0.00 | -103.69 | 134.21 | 0.00 |
| 5 | A | -198.82 | 125.21 | 25.00 | 25.00 | 353.66 | 0.00 | -198.96 | 126.46 | 0.00 |
| 6 | A | 5.15 | 185.94 | 25.00 | 25.00 | 264.36 | 0.00 | 3.90 | 185.82 | 0.00 |
| 7 | A | -149.21 | 222.91 | 25.00 | 25.00 | 258.19 | 0.00 | -150.44 | 222.66 | 0.00 |

**Statistics**

| Description | Symbol | Avg | Max | Min | Max/Min | Avg/Min |
|---|---|---|---|---|---|---|
| Spill Light Summary | + | 1.3 fc | 5.4 fc | 0.0 fc | N/A | N/A |
| Stat Zone # 2 | ◇ | 2.6 fc | 5.4 fc | 0.7 fc | 7.7:1 | 3.7:1 |

**Schedule**

| Symbol | Label | Quantity | Manufacturer | Catalog Number | Description | Lamp | Number Lamps | Lumens Per Lamp | Light Loss Factor | Wattage |
|---|---|---|---|---|---|---|---|---|---|---|
| | A | 6 | American Electric Lighting | ATB2 40BLEDE15 XXXXX R4 4K/5K | ATB2 SERIES LED 1500MA TYPE 4 4000K/5000K CCT | LED Array | 1 | 21798 | 0.91 | 198 |

**Disclaimer**

This architectural lighting submittal is provided only for informational purposes and to the help the customer or end-user (as applicable) understand how various sections of linear fixtures connect to each other and how they mount to the ceiling. This lighting submittal is strictly based on the information provided to Acuity Brands, and is provided without warranty as to accuracy, completeness, reliability or otherwise. If the information (including but not limited to floor-plans, reflected ceiling plans, electrical plans and specifications) provided to Acuity Brands is incomplete or not current (i.e., newer versions exist), the accuracy of proposed design may be adversely affected. Once this lighting submittal is received by the customer or end-user (as applicable), it is the obligation of the customer or end-user (as applicable) to consult with a professional engineering advisor to determine whether the proposed design meets the applicable project requirements for lighting system performance, code compliance, safety, suitability and effectiveness for use in a particular application. In no event will Acuity Brands be responsible for any loss resulting from any use of any information contained in this lighting submittal.

ACUITY DESIGN SERVICES

# Union Power - Arbys 5236 Independence Blvd

**Designer**
R.Cunningham
**Date**
7/9/2020
**Scale**
As Shown
**Drawing No.**
143457-0-A1
**Summary**

SL.1