Barrington 2

WAXHAW, UNION COUNTY,NORTH CAROLINA

PREPARED FOR:

SHEA HOMES

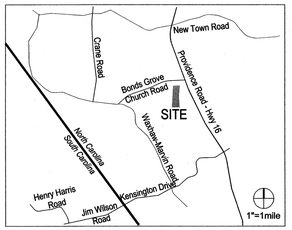

VICINITY MAP

Development Data:

Parcel ID:	06186020A
Site Area:	23.57 ac.
Existing Zoning:	CD R4 Conditional District
	Single-Family Residential
Jurisdiction:	Town of Waxhaw
Number of Lots Proposed:	54
Watershed:	Catawba

Lot Requirements:

Minimum Lot Area:	12,000 SF
Acreage of Smallest Lot in Subdivision:	0.275 Ac.
Minimum Width:	60'
Minimum Depth:	60'
Maximum Lot Coverage:	75%
Maximum Bldg Height:	45'
Front Setback:	20'
Rear Yard:	30'
Side Yard (Interior):	10'
Side Yard (Corner):	20'
Maximum Accessory Height:	25'
Cumulative DBH per Lot:	8" (Not Including Street Trees)
Minimum Trees per Lot:	3 (Not Including Street Trees)
Open Space Provided:	4.76 ac. (20.2%)

Treesave Calculation:

Total Site Area: 23.57 ac.	
Less Perimeter Treesave area:	3.16 ac.
Less Proposed ROW:	3.56 ac.
Less Existing Pond	0.10 ac.
Net Site Area:	16.75 ac.
Interior Treesave Required:	3.35 ac. (20%)
Interior Treesave Provided:	3.43 ac (20.5%)

Project Phasing:

Estimated Completion Date of Subdivision Infrastructure	Spring 2015
Estimated Completion Date of Home Construction	Fall 2017

Development Contact:

Owner: Shea Investment Fund, LLC
8008 Corporate Center Drive
Suite 300
Charlotte, NC 28226

Developer: Shea Homes
Chase Kerley
8008 Corporate Center Drive
Suite 300
Charlotte, NC 28226
(704) 299-2306
chase.kerley@sheahomes.com

Engineer: Merrick & Company
Marcus King, PE
1001 Morehead Square Dr
Suite 530
Charlotte, NC 28203
(704) 529-6500
marcus.king@merrick.com

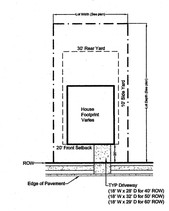

Typical Lot Layout
1" = 40'-0 "

STREET LENGTHS

Fairgreen Avenue (south)	1092 LF
Fairgreen Avenue (central)	522 LF
Cutters Spring Drive	641 LF
Autumn Ridge Drive	1454 LF
Harvest Moon Court	246 LF
	3955 LF

SHEET INDEX

		Date Last Revised	Number of Revisions
C001-C002	Cover sheet / general notes	01.29.14	04.01.14
-	Survey		
C200	Site Plan	01.29.14	04.23.14
C300	Demo / Erosion Control Notes	01.29.14	03.28.14
C301	Demo / Initial Erosion Control Plan	01.29.14	03.28.14
C302	Final Erosion Control Plan	01.29.14	03.28.14
C401-C402	Grading and Storm Drainage Plan	01.29.14	04.23.14
C450	Composite Drainage Area Map	01.29.14	04.23.14
C451-C452	Pre and Post Drainage Area Maps	01.29.14	04.23.14
C501-C504	Water Quality Plans & Details	01.29.14	03.28.14
C601-C605	Roadway Plan & Profiles	01.29.14	04.01.14
C801-C804	Site Details	01.29.14	-
C900	Planting Plan	01.29.14	04.01.14

0 50 100 200 300 400

Know what's **below.**
Call before you dig.

1. Contractor is fully responsible for contacting appropriate parties and assuring that existing utilities are located prior to beginning construction.
2. Contractor is responsible for placing barricades, using flag men, etc. As necessary to ensure the safety of the public.
3. All pavement cuts, asphalt or concrete, are to be placed according to standards of the north Carolina department of transportation and town specifications.
4. Shoring will be according to OSHA trenching standards part 1926, subpart p, or as amended.

MERRICK® & COMPANY
1001 MOREHEAD SQUARE DRIVE, SUITE 530
CHARLOTTE, NC 28203
NC ENGINEERING FIRM F-0908
PHONE: 704.529.6500

THIS DOCUMENT IS THE PROPERTY OF MERRICK AND COMPANY FOR THE PROVISION OF SERVICE PERFORMED BY MERRICK AND COMPANY FOR A SPECIFIED PROJECT. IT IS NOT INTENDED OR REPRESENTED TO BE SUITABLE FOR REUSE ON THIS PROJECT OR IN PART ON EXTENSIONS OF THE PROJECT, OR ON ANY OTHER PROJECT. REUSE WITHOUT WRITTEN VERIFICATION OR ADAPTATION BY MERRICK AND COMPANY FOR THE SPECIFIC PURPOSE INTENDED WILL BE AT THE USER'S SOLE RISK WITHOUT LIABILITY OR LOSS EXPOSURE TO MERRICK AND COMPANY.

Shea Homes, LLC
8008 Corporate Center Dr.
Suite 300
Charlotte, NC 28226

REV.	REVISION DESCRIPTION	DATE:	CHANGED	CHECKED	APPROVED
2	Redline Town of Waxhaw	04.23.14	CIP	CIP	CIP
1	Initial Agency Review	04.01.14	CIP	CIP	CIP

REVISIONS:

		DATE:
DESIGN BY:	SRT	11/18/13
DRAWN BY:	KAL	11/18/13
CHECKED BY:	MJK	01/29/14
APPROVED BY:	CIP	01/29/14

Barrington 2
Waxhaw, Union County, NC

Cover Sheet

NORTH CAROLINA PROFESSIONAL SEAL 032730 ENGINEER CLAUDIA I. PRADO
4/23/14

JOB NO: 65118007
DATE: 01/29/14
SHEET C001

\\merrick.com\CES\CHA\Projects\8007-00-Bell Property\Design\CDs\Civil\8007-C001-Cover.dwg

Development Standards:

1. General Provisions:
These Development Standards are a part of the Preliminary Subdivision Plan associated with the Conditional District Zoning application filed by Shea Home to accommodate a single-family residential development on this site (the "Site"). Development of the Site will be governed by the Conditional District Site Plan, these Development Standards and the applicable provisions of the Waxhaw Unified Development Ordinance (the "UDO"). Unless the Conditional District Site Plan or these Development Standards establish more stringent standards, the regulations established under the UDO for the CD R-4 (Conditional District Single-family Residential) zoning classification shall govern all development taking place on the Site.

The lot configurations, placements, and sizes shown on the Preliminary Subdivision Plan are schematic in nature and may be altered or modified during the design development and construction document phases within the maximum development limits established by buffers and setbacks. Such changes will be subject to review and approval by the Zoning Administrator to ensure any changes are consistent with the overall intent of the Preliminary Subdivision Site Plan, and any such changes are subject to and may also be approved in accordance with Section 16.2.9 of the UDO.

2. Permitted Uses; Buildings:
Single-family residential. Additionally, Accessory Structures, Home Occupations, and Subdivision Sales Offices shall be permitted in accordance with the applicable Supplemental Regulations.

3. Maximum Development:
A maximum 54 single-family lots may be developed on the Site.

4. Setbacks, Side Yards and Rear Yards:
All buildings constructed on the Site shall satisfy or exceed the setback, rear yard and side yard requirements established under the UDO for the R-4 zoning district.

5. Parking:
A. Parking shall be provided in accordance with Section 12.3 of the UDO. Parking will only be allowed on one side of streets with 40' ROW. Parking enforcement will be conducted by the HOA. Speed limit will also be restricted to 25 MPH.
B. Each cul-de-sac will have a minimum of 87' W at the R.O.W. and 67' W pavement per 18.9.2 of the UDO.

6. Flood Plain Information:
Flood Certification: This is to certify that the subject property is not located in a special flood hazard area as shown on maps prepared by the Federal Emergency Management Agency, Federal Insurance Administration, dated October 16, 2008, comm. panel no. 3710446400J.

7. Stormwater Management:
A. Storm water quantity control shall follow the requirements set forth in the Town of Waxhaw Stormwater Design Manual.
B. The location, size, and type of stormwater management systems depicted on the Conditional District Site Plan are subject to review and approval at the time of full plan submittal. Adjustments may be necessary in order to accommodate stormwater treatment requirements and natural site discharge points.
C. This project is required to meet Phase 2 Stormwater Requirements
D. NCDENR shall review and approve the requirements for Phase 2 stormwater requirements. A copy of all approvals and correspondence with NCDENR shall be provided to the Town of Waxhaw Engineering Department.

8. Lighting:
Exterior lighting shall comply with Section 12.12 of the UDO. The quality of street lights installed by the Petitioner shall be compatible with adjacent neighborhoods (match or closely resemble existing street lights).

9. Vehicular Access:
A. Vehicular access to the Site shall be as generally depicted on the Preliminary Subdivision Plan. The placement and configuration of these access points are subject to modifications required to accommodate final site and architectural construction plans and designs and to any adjustments required for approval by the Town of Waxhaw and NCDOT. All turning radii shall be constructed so as to be accessible by emergency vehicles.
B. In accordance with the Town of Waxhaw regulations, a temporary turn-around shall be provided at the end of each phase of construction as needed.

10. Architectural Controls:
A. Schematic architectural renderings of the elevations of the buildings and improvements proposed to be constructed on the site submitted with the Preliminary Subdivision Plan are intended to depict the general conceptual architectural style, character and elements of the proposed buildings and improvements. Accordingly, the proposed buildings and improvements shall be designed and constructed so that they are substantially similar in appearance to the schematic architectural renderings. Changes and alterations which do not materially change the overall conceptual architectural style and character are permitted based upon final design/construction drawings.
B. Vinyl siding will not be a permitted exterior building material. Homes will contain exterior material elements that will consist of brick, stone, or Hardi plank.
C. The maximum building height of all proposed structures shall be 2 stories.
D. All garages should be side-loaded or front-loaded and front-loaded garages shall not exceed more than 4' from the front facade.
E. The homes will be marketed from a sales center located in the community. The location of the sales center shall be determined at a later date. Parking will be provided in accordance with any local requirements.
F. All homes will be on a slab, crawl space, or basement foundation. The exposed front foundation will be brick, stone, stucco, or other masonry veneer.
G. Minimum main structure roof pitch shall be 6:12 ratio as approved by the Zoning Administrator Section 20.4.1.A.3 of the UDO.
H. The nearest lot upon which a particular front façade elevation can be repeated on the same side of the street is the fifth in a sequence starting from the original lot. The nearest lot upon which a particular elevation can be repeated on the opposing side of the street is the third in a sequence starting from the original lot. If there is any question regarding approval of a building elevation location or repetition the builder is required to obtain approval from the Administrator prior to construction, in accordance with Section 20.4.1.A.12 of the UDO.

11. Pedestrian and Bicycle Circulation:
Sidewalks of at least 5 feet in width shall be provided along proposed streets as generally depicted on the Preliminary Subdivision Plan.

12. Internal Landscaping:
A. Tree planting locations depicted on the Preliminary Subdivision Plan are preliminary and may be altered or modified to accommodate changes to the plan.
B. On any site where 20% or more of the site has existing trees present, a minimum of 20% of the internal property area shall be preserved with existing trees within the site interior.
C. Interior tree protection areas shall contain no less than one (1) tree per 2500 square feet of tree protection area. Where existing trees are insufficient to meet these standards, new trees shall be planted to meet this minimum standard. New trees shall be a minimum of two (2) inch caliper at planting.

13. Tree Preservation and Mitigation:
A. Tree preservation and mitigation will be delineated through a collaborative process between the Zoning Administrator, developer, and a North Carolina registered urban forester, registered landscape architect, or ISA certified arborist. Collaboration between these parties will promote appropriate tree preservation measures for the Site and will strike an appropriate balance of tree protection, preservation, and planting in an urban environment while accomplishing the overall intent of the UDO.
B. Where new tree plantings are proposed within the Site the Petitioner shall utilize sustainable planting practices (soil enhancements, structural soil, etc.) to ensure that newly planted trees are provided an optimal growing environment.
C. Existing tress eight (8) inches or larger DBH and understory trees four (4) inches or larger DBH shall be preserved within 30 feet of the exterior perimeter of any subdivision.
D. Any tree preservation area located within a lot shall have a tree preservation easement.

14. Tree Protection Fencing:
During development, the owner or developer shall be responsible for the erection of any and all barriers necessary to protect any existing or installed trees from damage both during and after construction. The tree protection fencing shall be clearly shown on the site plan or subdivision plan, and shall be maintained until the final site inspection prior to the Certificate of Occupancy is scheduled.

15. Common Open Space:
All common open space shall be recorded and deeded to the Home Owners Association.

16. Signage:
All proposed entry signage shall comply with section 13 of the Town of Waxhaw UDO.

17. Street Trees:
Street trees shall be placed 40'-60' on center. They shall be placed within 25' of back of curb and outside of R.O.W. no closer than 4' from sidewalk.

At the October 8, 2013 meeting of the Board of Commissioners, the public hearing was held for CD-001013-2013 and the Board placed the following conditions to CD-001013-2013 while approving the conditional zoning at its October 22, 2013 meeting:

1. A barricade will be installed and remain at the connection point from the Site to Cutters Springs Drive until the streets are turned over to the Town of Waxhaw and no petition for street acceptance will be made until 90% of the lots within the Site have been issued a Certificate of Occupancy by the Town of Waxhaw.
2. A barricade will be installed and remain at the eastern end of Fairgreen Avenue to provide for a future connection to Providence Road.
3. When the street connection from the Site to Cutters Springs Drive is made, if permitted by the Town of Waxhaw and NCDOT, the Developer will install traffic calming island on the Site within the right-of-way of Cutters Springs Drive.
4. Prior to the issuance of the tenth (10th) Certificate of Occupancy for homes within the Site, the Petitioner shall pay for the greater of (i) installing up to fourteen (14) speed humps or stop signs or (ii) $25,200 to the Town of Waxhaw to be used to mitigate traffic impacts related to the new street connection from the Site to Cutter Springs Drive.
5. Prior to the issuance of a Certificate of Occupancy for the 20th lot within the Site, the Petitioner shall make a $2,500 monetary contribution to the Park Providence Homeowner's Association.
6. In order to limit impacts to the Barrington neighborhood, construction traffic serving the Site will be directed to access the Site by using the northern most connection point between Twinberry Lane and the Site.
7. Section 20 of the UDO as it exists at the time of approval will govern this subdivision along with the additional architectural requirements provided in conjunction with the conditional zoning plan. The architectural renderings accompanying the rezoning plan shall be base designs and additional home designs or home elevations that meet or exceed the architectural features set forth therein may be approved by the Zoning Administrator. However, brick shall be used as the main exterior material on four sides of all homes, and no homes shall be less than 2800 square feet.
8. BMPs on the Site shall be maintained by the Developer until they are no longer being used as sediment control devices and are approved by the Town Planning Department. When Developer converts the ponds for permanent use the Developer will provide a certification from the design engineer that they are built as designed.
9. Comply with terms and conditions (including the seventeen (17) notes) of the Site Plan dated June 18, 2013 and revised September 6, 2013.

General Notes:

1. All work and materials shall conform to the latest edition of the Town of Waxhaw Unified Development Ordinance (UDO).
2. All work and materials shall conform to the latest edition of the North Carolina Department of Transportation (NCDOT) standard specifications for roads and structures unless otherwise specified by the Town of Waxhaw land development standards.
3. All public streets within the development will be constructed to Town of Waxhaw standards in order to be dedicated public right of ways.
4. The developer shall make a diligent effort to preserve areas of required tree save buffers where significant vegetation exists. These areas shall remain undisturbed, removal of existing trees within protection zone without a permit will result in penalties and mitigation requirements by the Town of Waxhaw per Section 9.21 of UDO. The developer shall not encroach into the preservation area.
5. Contractor shall coordinate all curb and street grades in intersection with inspector.
6. In order to ensure proper drainage, curb shall have a minimum of 0.5% slope. Curb and gutter on the plans may be adjusted based on field staking by project engineer and upon approval of the town engineer.
7. Developer will provide street signs per MUTCD standard.
8. Town Engineer shall be given 48 hours notice prior to construction.
9. Sight triangles shown are the minimum required. Further requirements may be made by North Carolina Department of Transportation (NCDOT).
10. Non-standard items (i.e.: pavers, irrigation, etc.) in the right of way require encroachment agreement prior to installation.
11. Any building within the 100+1 building restriction floodline is subject to the restrictions of the Town of Waxhaw Unified Development Ordinance (UDO.
12. All concrete shall have a minimum compressive strength of 3600 p.s.i. at 28 days and shall comply with section 1000 of the NCDOT standard specifications.
13. All concrete shall be cured with 100% resin base, white pigmented curing compound which meets A.S.T.M. specifications c-309, type 1, applied at one gallon to 400 sf within 24 hours of placement of concrete.
14. All curb and gutter shall be backfilled with soil approved by the inspector 48 hours after construction to prevent erosion.
15. All backfill shall be non-plastic in nature, free from roots, vegetative matter, waste, construction material, or other objectionable material. Said material shall be capable of being compacted by mechanical means and the material shall have no tendency to flow or behave in a plastic manner under the tamping blows or proof rolling
16. All trenches in the street right of way shall be backfilled and compacted in 8" lifts with suitable material immediately after the pipe is laid.
17. All subgrade for roads shall be compacted to 100% of the maximum density obtainable with the standard procter test.
18. All tests shall be performed by the developer at no cost to the Town of Waxhaw. Detailed report of all tests shall be submitted to the Town of Waxhaw Engineering Department.
19. Contractor shall maintain two way traffic at all times when working within existing streets. The contractor shall place and maintain signs, danger lights, barricades, and furnish watchmen or flagmen to direct traffic in accordance with the manual on uniform traffic control devices (MUTCD).
20. Sidewalks shall be constructed of not less than 3600 psi concrete and shall be four (4) inches thick, constructed on an adequately graded base, except where a sidewalk crosses a driveway it shall be six (6) inches thick.
21. Subgrade for sidewalks shall be compacted to 95% of the maximum density obtainable with the standard procter test. the surface of the sidewalk shall be steel trowel and light broom finished and cured with an acceptable curing compound. Tooled joints shall be provided at an interval not less than five (5) feet and expansion joints at intervals not more than 45 feet. The sidewalk shall have a lateral slope of 1/4" per foot.
22. The elevation of the sidewalk shall be related to the elevation of the crown of the adjacent roadway.Tthe sidewalk shall be no less than six (6) inches or more than (18) inches above the roadway crown, except that the crosswalk elevations shall be properly related to the existing or proposed roadway curb.
23. In rolling and hilly terrains, sweeping of the stone base and/or application of a tack coat may be required near intersections. these requirements will be established by the inspector based on field conditions.
24. Utility installations may only cross buffer areas at interior angles measured at property lines which are not less than 75 degrees and, to the extent possible, paths cleared for such utility lines shall be replanted with plant materials from the ordinances approved plant list.
25. No buildings, parking spaces or maneuvering areas may be located within any buffer areas.
26. The purpose of the storm drainage easement (SDE) is to provide storm water conveyance and any structures and/or obstruction to storm water flow is prohibited.
27. Under drainage shall be provided as directed by geo-technical engineer. Determination shall be made in the field. Drains to be installed per NCDOT detail #815.03. Geotechnical engineer shall provide detailed drawings, reports, locations and materials used as well as all data to the Town of Waxhaw Engineering Department.
28. All storm boxes and storm pipe to be provided by NCDOT approved manufacturer. Dot stamped boxes and dot stamped pipe will not be required for this project.
29. Proof rolling of street subgrade and aggregate base material shall be performed by the contractor in the presence of town Staff. General guidelines and procedures for proof rolls are outlined in the Town of Waxhaw Proof Roll Guidelines document. The developer is responsible for all fees associated with proof rolls.

MERRICK® & COMPANY
1001 MOREHEAD SQUARE DRIVE, SUITE 530
CHARLOTTE, NC 28203
NC ENGINEERING FIRM F-0908 PHONE: 704.529.6500

THIS AND ANY OTHER ELECTRONIC MEDIA COUNTERPART IS AN INSTRUMENT OF SERVICE PREPARED BY MERRICK AND COMPANY FOR A DEFINED PROJECT. IT IS NOT INTENDED OR REPRESENTED TO BE SUITABLE FOR REUSE IN WHOLE OR IN PART ON EXTENSIONS OF THE PROJECT OR ON ANY OTHER PROJECT. REUSE OR MODIFICATION, OF ANY UTILIZATION IF NOT A FINISHED INSTRUMENT, WITHOUT THE PRIOR EXPRESS WRITTEN CONSENT OF MERRICK AND COMPANY SHALL BE AT THE SOLE RISK FOR THE UNAUTHORIZED USER WITHOUT LIABILITY OR LOSS EXPOSURE TO MERRICK AND COMPANY.

Shea Homes, LLC
8008 Corporate Center Dr.
Suite 300
Charlotte, NC 28226

REV	REVISION DESCRIPTION	DATE:	CHANGED BY:	CHECKED BY:	APPROVED BY:
1	Initial Agency Review	03.10.14	CIP	CIP	CIP

		DATE:
DESIGN BY:	SRT	11/18/13
DRAWN BY:	KML	11/18/13
CHECKED BY:	MJK	01/29/14
APPROVED BY:	CIP	01/29/14

Barrington 2
Waxhaw, Union County, NC

General Notes

NORTH CAROLINA PROFESSIONAL ENGINEER SEAL 032730 CLAUDIA I. PRADO
4/1/14

JOB NO: 65118007
DATE: 01/29/14
SHEET C002

Q:\CHA\Projects\8007-00-Bell Property\Design\CDs\Civil\8007-C001-Cover.dwg

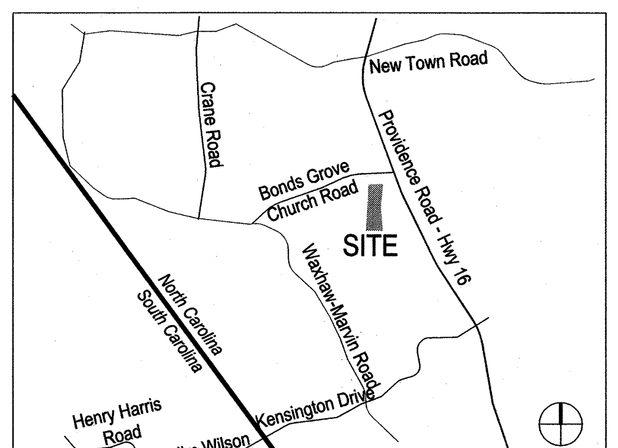

VICINITY MAP

KEYNOTES:

- (A) PROP. CUL-SE-SAC REFER TO DETAIL 8/C800
- (B) PROP. 2' VALLEY CURB AND GUTTER PER NCDOT REFER TO DETAIL 2/C800
- (C) PROP. ACCESSIBLE PER RAMP NCDOT REFER TO DETAILS C800
- (D) SIGHT TRIANGLE: 35' x 35'

LEGEND:

- PROP. STOP SIGN (MUTCD R1-1)
- 20'SDE PROP. STORM EASEMENT W/ WIDTH
- PROP. STREET SIGN
- PROP. TREE PRESERVATION BUFFER
- PROP. 5' UTILITY EASEMENT
- STREET LIGHT w/ 100' RADIUS
- STREET LIGHT PEDESTAL
- TRANSFORMER

NOTE:

NO PARKING/FIRE LANE SIGNAGE SHOULD BE PLACED EVERY 500' ON INBOUND LANE OF ALL STREETS INCLUDING CUL-DE-SAC.

STREET LIGHTS PROVIDED BY UNION POWER COOPERATIVE, STYLE SIMILAR TO ACORN LANTERN. REFER TO DETAIL 1/C800 FOR CROSS SECTION.

GAS LINE, COMMUNICATION, AND POWER LINES PLACEMENT TO BE DETERMINED BY UTILITY PROVIDER.

UTILITY STRUCTURES INCLUDING TRANSFORMERS MUST BE SCREENED FROM ABUTTING PROPERTY AND FROM PUBLIC VIEW FROM PUBLIC STREET. IF SHRUBS ARE USED FOR SCREENING PURPOSES, THEY SHALL BE POSITIONED TO FORM A CONTINUOUS TIGHT SCREEN AT MATURE GROWTH PER UDO SECTION 9.8.2.B. SHRUBS USED FOR BUFFERS SHALL BE AT LEAST 30 INCHES WHEN PLANTED AND EXPECTED TO GROW TO A MIN. HEIGHT OF 5 TO 6 FT WHEN MATURE, WITH A MATURE WIDTH OF 4 FT PER UDO SECTION 9.8.2.C.3

BOUNDARY LINE TABLE

LINE	LENGTH	BEARING
L1	2.08	N88°50'55"W
L2	9.92	N04°13'33"W
L3	50.03	N03°16'54"E
L4	65.55	N03°19'13"E
L5	64.92	N03°15'19"E
L6	65.51	N03°17'12"E
L7	65.00	N03°12'37"E
L8	65.47	N03°16'11"E
L9	64.96	N03°13'32"E
L10	65.56	N03°18'31"E
L11	64.98	N03°16'06"E
L12	65.48	N03°13'50"E
L13	65.53	N03°16'51"E
L14	68.30	N03°18'08"E
L15	50.03	N03°15'29"E
L16	69.91	N03°14'37"E
L17	65.57	N03°17'58"E
L18	65.46	N03°15'41"E
L19	96.34	N03°16'16"E
L20	37.76	N03°10'56"E

ADJACENT PROPERTY OWNERS

LOT #	OWNER (N/F)	PIN	DB/PG	PC/PG	LOT #	OWNER (N/F)	PIN	DB/PG	PC/PG
17	ALEXA C. THOMAS	06159274	4111/747	I/856	109	SHEA REAL ESTATE INVESTMENTS LLC	06186315	5648/757	L/480
18	KATHERIN BROOKE COVINGTON & JUSTIN LEE SPROWLES	06159275	5228/231	I/856	110	SHEA REAL ESTATE INVESTMENTS LLC	06186316	5648/757	L/480
23	ROBERT G. SMEDBERG & CHRISTINA MONTERO-SMEDBERG	06159282	4383/541	I/983	111	ROBERT A. & JUNELLE L. WHITE	06186263	5548/673	J/270
COS	PARK PROVIDENCE HOMEOWNERS ASSOCIATION INC.	06159296	4047/683	I/983	112	MAITREYEE F. & FANIL M. SHAH	06186264	5588/672	J/270
24	DONNA L. WILLIS-CROMPTON & DERECK N. CROMPTON	06159283	4141/785	I/983	113	G. BYRON MORGAN, II & JESSICA S. MORGAN	06186265	5518/146	J/270
25	FRANCISCO ALBINO GALICIA ROJAS & ADRIANA CRUZ CONTRERAS	06159284	5314/37	I/983	114	JOHN GORDON & ANGELA MARTINEZ GORDON	06186266	5647/793	J/270
26	ANITA SANCINELLA & JOSEPH SANCINELLA	06159285	4207/22	I/983	115	DOUGLAS C. & LIANNE M. HOFER	06186267	5527/282	J/270
27	BHUVANESUWARI SWAMINATHAN & SWAMINATHAN VENKATAKRISHNAPRASHAD	06159286	5337/706	I/983	116	TSE HO CHEN & SHU LING WANG	06186268	5689/398	J/270
28	FERDINANDO MARINO & ROSA BATISTA	06159287	5384/274	I/983	117	SHEA REAL ESTATE INVESTMENTS LLC	06186269	5648/757	J/270
29	DAVID L. & VIRGINIA F. BROWN	06159288	4215/142	I/983	118	ANNETTE NICOLE CURRAN	06186270	5651/626	J/270
30	WAYNE L. & MARLO L. GARRIS	06159289	4232/489	I/983	119	KRISHNA RAVI & HIMABINDU MANDAVA	06186270	5561/533	L/367
31	JOHN T. & LISA D. AUSTIN	06159290	4229/249	I/983	120	LINDA M. NAPOLITANO	06186271A	5564/85	L/367
32	GERARD & DEIDRE WHELAN	06159291	4663/760	I/983	121	WILLIAM DAVIS & AIMEE LAMKIN SIMMONS	06186272	05789/599	J/270
33	JACK & ELIZABETH SLUITER	06159292	5197/407	I/983	122	WILLIAM DARRELL & DIANE GANAY SIZEMORE	06186273	5160/755	J/270
C	McCORKLE FARM LLC	06159003D	4903/787	D/974	123	RIGOBERTO & SHIRLEY MANALIGOD	06186274	4590/580	J/270
D	THE DAVID L. FRANCIS FAMILY LIMITED PARTNERSHIP	06162013A	6023/716	RM-1	124	JONATHAN M. & KIM L. ANSLOW	06186275	5079/82	J/270
E	ROBERT GORDON PFAU, TRUSTEE AND PATRICIA A. PFAU, TRUSTEE OF THE PFAU DECLARATION OF TRUST DATED 01/12/1978	06189064	5802/896	L/718	125	DANIEL T. MORGAN, JR & ASHLEIGH G. MORGAN	06186276	5339/783	J/270
80	SHEA REAL ESTATE INVESTMENTS LLC	06186304	5648/757	L/480	128	CHRISTOPHER R. & CARSON H. BAUCOM	06186279	4660/845	J/270
107	SCOTT A. & LYNDA D. WAHLERS	06186313	5691/418	L/480	129	JON & ANDREA RIDGWAY	06186279	4392/820	J270
108	HUGH & ANGELA HUMAN	06186314	5867/356	L/480	A	SHEA INVESTMENT FUND I LLC	06186020 90	6130/840	L/228
					B	WELLS FARGO BANK NATIONAL ASSOCIATION	06186011A	5415/905	L/228

Note: Lot numbers reference the surveyed and GIS data for lots within each subdivision as per the legal description and online information.
Letters have been developed by Merrick & Company as reference to parcels not identified by a specific lot number. They are identifiers and not a legally identified letter.

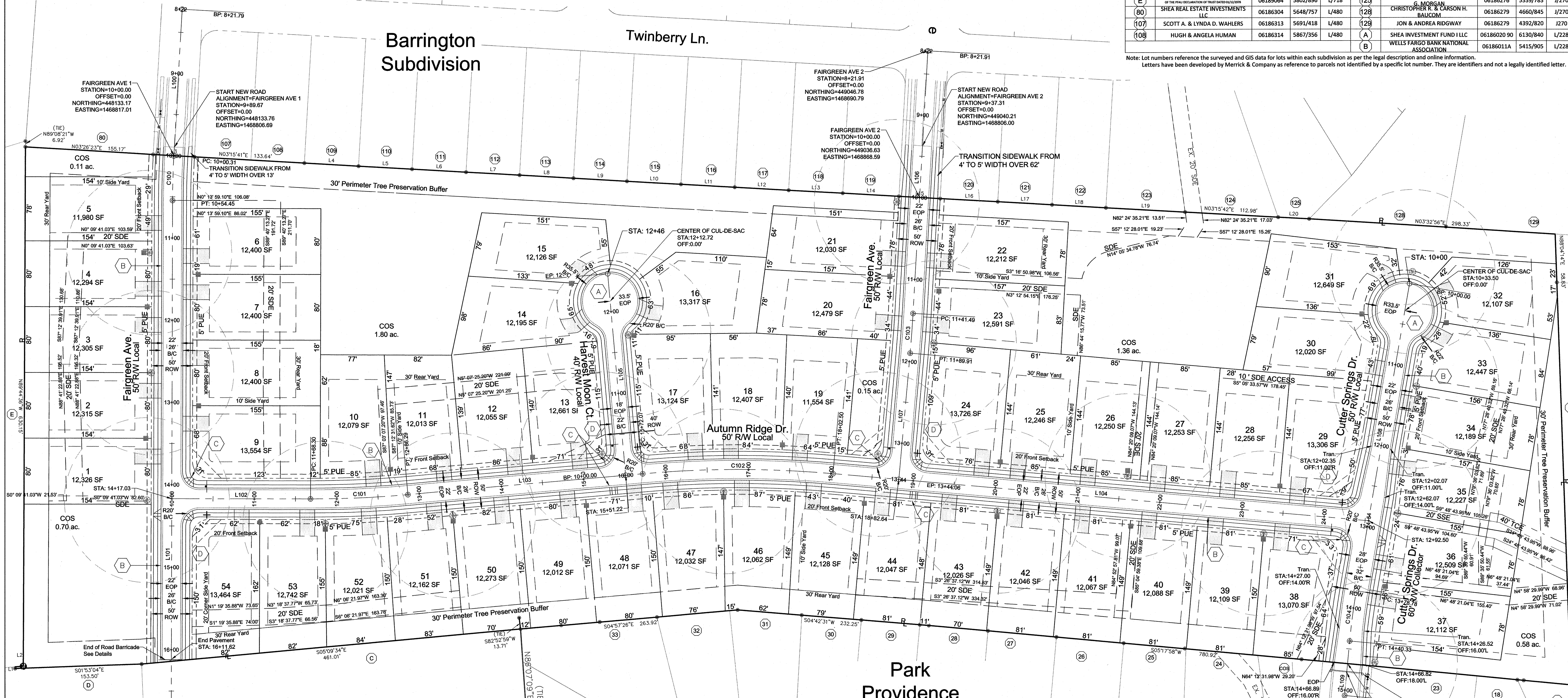

CENTERLINE DATA

Line #	Length	Direction
L100	178.52	S86° 44' 10.71"E
L101	859.50	S89° 50' 18.97"E
L102	168.30	N0° 09' 41.03"E
L103	285.78	N5° 02' 19.06"W
L104	651.62	N5° 07' 02.19"E
L105	246.22	S84° 57' 40.94"W
L106	319.58	S86° 43' 56.09"E
L107	154.15	S84° 52' 57.81"E
L108	378.78	S80° 11' 16.05"E
L109	66.24	S84° 35' 44.29"E
L110	42.50	S71° 29' 56.50"E

CENTERLINE CURVE DATA

Curve #	Radius	Length	Delta	Chord Length
C100	1000.00	54.15	3.1023	54.14
C101	1300.00	117.98	5.2000	117.94
C102	1300.00	230.43	10.1559	230.13
C103	1500.00	48.42	1.8495	48.42
C104	800.00	61.55	4.4078	61.53
C105	400.00	91.43	13.0966	91.23

811 Know what's below. Call before you dig.

1. Contractor is fully responsible for contacting appropriate parties and assuring that existing utilities are located prior to beginning construction.
2. Contractor is responsible for placing barricades, using flag men, etc. As necessary to ensure the safety of the public.
3. All pavement cuts, asphalt or concrete, are to be placed according to standards of the north carolina department of transportation and town specifications.
4. Shoring will be according to osha trenching standards part 1926, subpart p, or as amended.

0 30 60 120 180 240

\\merrick.com\CES\CHA\Projects\8007-00-Bell Property\Design\CDs\Civil\8007-C200-SitePlan.dwg

MERRICK® & COMPANY
1001 MOREHEAD SQUARE DRIVE, SUITE 530
CHARLOTTE, NC 28203 PHONE: 704.529.6500
NC ENGINEERING FIRM F-0908

THIS AND ANY OTHER ELECTRONIC MEDIA COUNTERPART IS AN INSTRUMENT OF SERVICE PREPARED BY MERRICK AND COMPANY FOR A DEFINED PROJECT. IT IS NOT INTENDED OR REPRESENTED TO BE SUITABLE FOR REUSE IN WHOLE OR IN PART ON EXTENSIONS OF THE PROJECT OR ON ANY OTHER PROJECT. REUSE OR MODIFICATION, OR ANY UTILIZATION IF NOT A FINISHED INSTRUMENT, WITHOUT THE PRIOR EXPRESS WRITTEN CONSENT OF MERRICK AND COMPANY SHALL BE AT THE SOLE RISK FOR THE UNAUTHORIZED USER WITHOUT LIABILITY OR LOSS EXPOSURE TO MERRICK AND COMPANY.

Shea Homes, LLC
8008 Corporate Center Dr.
Suite 300
Charlotte, NC 28226

REV	REVISION DESCRIPTION	DATE:	CHANGED BY:	CHECKED BY:	APPROVED BY:
2	Redline Town of Waxhaw	04.23.14	CIP	CIP	CIP
1	Initial Agency Review	04.01.14	CIP	CIP	CIP

		DATE:
DESIGN BY:	SRT	11/18/13
DRAWN BY:	KML	11/18/13
CHECKED BY:	MJK	01/29/14
APPROVED BY:	CIP	01/29/14

Barrington 2
Waxhaw, Union County, NC

Site Plan

NORTH CAROLINA PROFESSIONAL SEAL 032730 ENGINEER CLAUDIA I. PRADO 4/23/14

JOB NO: 65118007
DATE: 01/29/14
SHEET C200

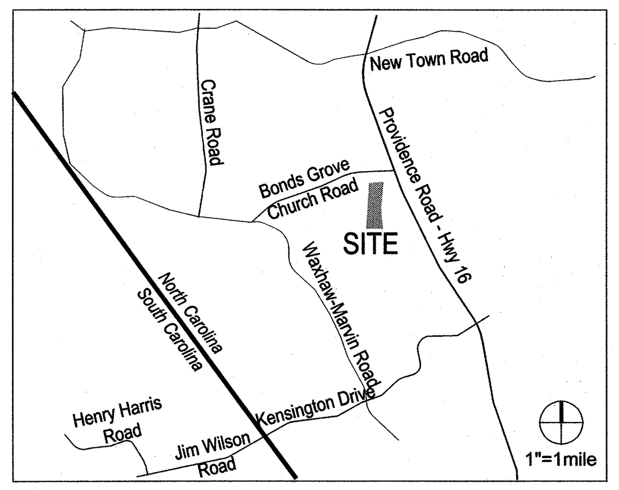

VICINITY MAP

EROSION CONTROL SEQUENCE:

1. ALL APPLICABLE EROSION CONTROL SEQUENCE NOTES FROM THE INITIAL EROSION CONTROL PLAN SHALL APPLY TO FINAL EROSION CONTROL PLAN.
2. PLAN AS ILLUSTRATED SHOWS THE FINAL EROSION CONTROL PHASE, JUST PRIOR TO BRINGING THE STORM SYSTEM ONLINE, AND STABILIZATION OF AREAS DRAINING THROUGH THE STORM SYSTEM. UPON BRINGING STORM SYSTEM ONLINE. SEE BELOW FOR TRANSITION BETWEEN THE INITIAL AND FINAL PHASES.
3. FLAG ADDITIONAL WORK LIMITS AND BUFFER AREAS FOR PROTECTION AS NECESSARY.
4. **CALL JAMES MOORE WITH NCDENR TO SCHEDULE PRECONSTRUCTION MEETING (704-235-2138)** HOLD PRECONSTRUCTION CONFERENCE (AS NECESSARY FOR THIS PHASE) AT LEAST ONE WEEK PRIOR TO STARTING CONSTRUCTION. ALL MEASURES TO MEET THE DETAILS AND SPECIFICATIONS OF THE CURRENT NCDENR EROSION AND SEDIMENT CONTROL MANUAL.
5. ASSURE TEMPORARY GRAVEL CONSTRUCTION ENTRANCE IS WELL MAINTAINED, ADJUST AS NECESSARY.
6. INSTALL PERIMETER EROSION AND SEDIMENT CONTROL MEASURES, SEDIMENT BASINS AND TRAPS, DIVERTING RUNOFF AS INDICATED ON PLANS. THE INSTALLATION OF SEDIMENT BASIN #1 WILL REQUIRE THE SURFACE DE-WATERING OF THE EXISTING POND IN A CONTROLLED MANNER AS TO NOT CREATE AN EROSION CONTROL ISSUE DOWNSTREAM. DE-WATERING DISCHARGE TO NON PAVED AREAS MUST MINIMIZE THE POTENTIAL FOR SCOUR AT THE DISCHARGE POINT EITHER USING A VELOCITY DISSIPATION DEVICE OR DE-WATERING FILTER BAG REFER TO DETAIL 4/12.5. FREQUENT OBSERVATION AND MAINTENANCE ARE NECESSARY TO MAINTAIN EFFECTIVE OPERATING CONDITIONS. INSPECTIONS AND CORRECTIVE MEASURES SHOULD BE DOCUMENTED.
7. ASSURE BYPASS STORM IS STILL PROTECTED AND ADEQUATE COVER PROVIDED PER THE INITIAL EROSION CONTROL PLAN.
8. CONSTRUCT ANY ADDITIONAL TEMPORARY MEASURES AS DEEMED NECESSARY BY THE INSPECTOR OR FIELD CONDITIONS. DO NOT IMPACT ADJACENT SITES WITH EROSION CONTROL MEASURES.
9. COMPLETE SITE CLEARING AS NEEDED.
10. PHASE 1: COMMENCE ROUGH GRADING TOWARDS FINAL GRADING (AS SHOWN ON THIS PLAN), TRANSITIONING EROSION CONTROL DEVICES (SPECIFICALLY THE SKIMMER BASINS AND SEDIMENT BASIN) TO THIS FINAL EROSION CONTROL PLAN AS SITE IS BROUGHT TO GRADE.
11. FINALIZE ROUGH GRADING SITE, STOCKPILE TOPSOIL, AND RELOCATE / INSTALL ADDITIONAL SEDIMENT FENCE AS NECESSARY. MAINTAIN FILL SLOPES DAILY AS SLOPES ARE GRADED IN.
12. STABILIZE DISTURBED AREAS IMMEDIATELY AFTER REACHING FINISHED GRADE. LEAVE THE SURFACE SLIGHTLY ROUGHENED AND THEN STABILIZE WITH SEED AND MULCH IMMEDIATELY.
13. ALL EROSION AND SEDIMENT CONTROL PRACTICES WILL BE INSPECTED WEEKLY AND AFTER RAINFALL EVENTS. NEEDED REPAIRS WILL BE MADE IMMEDIATELY.
14. INSTALL UNDERGROUND COMPONENTS, SUCH AS THE REMAINDER OF STORM, WATER MAINS AND SANITARY SEWER AS IDENTIFIED WITHIN THESE PLANS (I.E. SITE, GRADING ETC. PLANS). IMMEDIATELY STABILIZE ANY AREAS OUTSIDE OF ROADWAY UPON COMPLETION OF INSTALLATION. WHERE UNDERGROUND COMPONENTS CROSS TEMPORARY DIVERSION DITCHES, INSTALLATION MAY ONLY OCCUR DURING DRY CONDITIONS, AND ANY TEMPORARY DIVERSION DITCHES DISRUPTED MUST BE RE-INSTALLED.
15. CONSTRUCT ROADWAYS AND SIDEWALKS AS SHOWN WITHIN THESE PLANS, STABILIZING DISTURBED AREAS BEYOND THE LIMITS NECESSARY FOR CONSTRUCTION OF THESE COMPONENTS IMMEDIATELY UPON INSTALLATION. REMOVE TEMPORARY DIVERSION DITCHES ONLY AS NECESSARY FOR INSTALLATION OF ROADS.
16. PHASE 2: CONSTRUCT BUILDINGS AND ASSOCIATED COMPONENTS (SUCH AS DRIVEWAYS AND PATIOS) AS DESIRED FOR THE DEVELOPMENT OF THIS SITE, IMMEDIATELY STABILIZING DISTURBED RESULTING FROM SUCH CONSTRUCTION. REMOVE TEMPORARY DIVERSION DITCHES ONLY AS NECESSARY FOR INSTALLATION OF BUILDINGS.
17. UPON COMPLETION OF CONSTRUCTION, AND AFTER SITE IS STABILIZED, SCHEDULE INSPECTION WITH NCDENR FIELD INSPECTOR, REMOVAL OF EROSION CONTROL DEVICES SHALL BE PERMISSIBLE PER THE BELOW MEANS. NOTE THAT SEPARATE DRAINAGE AREAS, AS STABILIZED MAY BE REMOVED(PER THE BELOW) BEFORE ENTIRE SITE IS STABILIZED AS LONG AS THE AREA DRAINING TO THESE AREAS IS FULLY STABILIZED AND THE INSPECTOR APPROVES REMOVAL.
18. WITH APPROVAL BY INSPECTOR (PER THE ABOVE), COMMENCE REMOVAL OF TEMPORARY EROSION CONTROL MEASURES:
    - 18.1. START WITH REMOVAL OF INLET PROTECTION (HOWEVER, MAINTAIN SILT SACKS UNTIL THE VERY END),
    - 18.2. REMOVE ANY DIVERSION DITCHES REMAINING
    - 18.3. REMOVE SKIMMER BASINS AND SEDIMENT BASIN.
    - 18.4. INSTALL ANY REMAINING PERMANENT VEGETATION ON STABILIZED AREAS.
    - 18.5. VERIFY ANY REMAINING BORROW PITS/SPOIL AREAS ARE FULL STABILIZED (SEE GRADING PLANS)
    - 18.6. UPON INSPECTION OF THE SITE THAT IT IS FULLY STABILIZED, REMOVE REMAINING SILT FENCE
    - 18.7. FINALLY, REMOVE SILT SACKS
19. CONTRACTOR TO ASSURE POSITIVE DRAINAGE ALONG ALL TEMPORARY DIVERSION SWALES, WHICH MAY INCLUDE TEMPORARY GRADING MODIFICATIONS
20. UPON APPROVAL FROM INSPECTOR TO REMOVE SEDIMENT AND EROSION CONTROL MEASURES MAY SEDIMENT BASIN BE CONVERTED TO WATER QUALITY FEATURE. CONSTRUCTION OF STORMWATER WETLAND TO ENSURE SEDIMENT LADEN WATER IS NOT DIRECTED TO OR FROM FEATURE BUT TO APPROPRIATE SEDIMENT CONTROL MEASURE.

MAINTENANCE PLAN:

1. ALL EROSION AND SEDIMENT CONTROL PRACTICES WILL BE CHECKED FOR STABILITY AND OPERATION WITHIN 24 HOURS OF RAIN EVENTS GREATER THAN 0.50 INCHES BUT IN NO CASE LESS THAN ONCE EVERY WEEK. ANY NEEDED REPAIRS WILL BE MADE IMMEDIATELY TO MAINTAIN ALL PRACTICES AS DESIGNED.THE QUALITY OF ALL STORMWATER DISCHARGES SHALL BE OBSERVED AND RECORDED. INSPECTION OF MEASURES TO BE DONE AFTER EACH PHASE OF PROJECT TO ENSURE APPROVED E&S CONTROL PLAN IS BEING FOLLOWED.
2. SEDIMENT WILL BE REMOVED FROM THE SEDIMENT TRAPS AND INLET PROTECTION DEVICES WHEN STORAGE CAPACITY HAS BEEN APPROXIMATELY 50%. GRAVEL WILL BE CLEANED OR REPLACED WHEN THE SEDIMENT POOL NO LONGER DRAINS PROPERLY.
3. SEDIMENT WILL BE REMOVED FROM BEHIND THE SEDIMENT FENCE WHEN IT BECOMES 0.5-FT DEEP AT THE FENCE. THE SEDIMENT FENCE WILL BE REPAIRED AS NECESSARY TO MAINTAIN A BARRIER.
4. ALL SEEDED AREAS WILL BE FERTILIZED, RESEEDED AS NECESSARY, AND MULCHED ACCORDING TO SPECIFICATIONS IN THE VEGETATIVE PLAN TO MAINTAIN A VIGOROUS DENSE VEGETATIVE COVER.
5. A RAIN GAUGE SHALL BE MAINTAINED ON SITE AND WRITTEN RECORDS OF DAILY RAINFALL AMOUNT SHALL BE RETAINED.

SOIL STABILIZATION PER NCG010000

SOIL STABILIZATION FOR ANY AREA OF THE SITE WHERE LAND DISTURBING ACTIVITIES HAVE TEMPORARILY OR PERMANTLY CEASED ACCORDING TO TABLE BELOW

SLOPE LENGTH 50' OR GREATER	7 DAYS	7 DAYS	7 DAYS	14 DAYS
	7 DAYS	7 DAYS	14 DAYS	14 DAYS
SLOPE LENGTH 10' OR LESS	7 DAYS	14 DAYS	14 DAYS	14 DAYS
	STEEPER THAN 2:1	STEEPER THAN 3:1	3:1 - 4:1	FLATTER THAN 4:1

EROSION CONTROL NOTES:

1. ALL EROSION CONTROL MEASURES SHALL BE CONSTRUCTED IN ACCORDANCE WITH THE NORTH CAROLINA EROSION & SEDIMENT CONTROL PLANNING & DESIGN MANUAL. THIS MANUAL SHOULD BE REFERENCED FOR ANY ADDITIONAL INFORMATION NEEDED.
2. BURIAL PITS ARE NOT PERMITTED ON SITE OR IN ANY LOCATION INSIDE THE TOWN OF WAXHAW.
3. ANY GRADING BEYOND THE DENUDED LIMITS SHOWN ON THE PLAN IS A VIOLATION OF THE CITY/COUNTY EROSION CONTROL ORDINANCE AND IS SUBJECT TO A FINE.
4. GRADING MORE THAN ONE ACRE WITHOUT AN APPROVED EROSION CONTROL PLAN IS A VIOLATION OF THE CITY/COUNTY EROSION CONTROL ORDINANCE AND IS SUBJECT TO A FINE.
5. ALL GRADED SLOPES OF 3:1 OR GREATER MUST BE SEEDED AND MULCHED WITHIN 7 CALENDAR DAYS AND ALL OTHER AREAS WITHIN 14 DAYS FOLLOWING COMPLETION OF ANY PHASE OF GRADING.
6. ADDITIONAL MEASURES TO CONTROL EROSION AND SEDIMENT MAY BE REQUIRED BY A REPRESENTATIVE OF THE TOWN OF WAXHAW (PERMITTING AUTHORITY), OR NORTH CAROLINA DEPT. OF ENVIRONMENT & NATURAL RESOURCES.
7. SLOPES SHALL BE GRADED NO STEEPER THAN 2:1. FILL SLOPES GREATER THAN 10 FEET REQUIRE ADEQUATE TERRACING.
8. APPROVAL OF THIS PLAN IS NOT AN AUTHORIZATION TO GRADE ADJACENT PROPERTIES. WHEN FIELD CONDITIONS WARRANT OFF-SITE GRADING, PERMISSION MUST BE OBTAINED FROM THE AFFECTED PROPERTY OWNERS AND PLAN APPROVAL IS OBTAINED.
9. THE DEVELOPER SHALL MAINTAIN EACH STREAM, CREEK, OR BACKWASH CHANNEL IN AN UNOBSTRUCTED STATE AND SHALL REMOVE FROM THE CHANNEL AND BANKS OF THE STREAM ALL DEBRIS, LOGS, TIMBER, JUNK AND OTHER ACCUMULATIONS.
10. STABILIZATION IS THE BEST FORM OF EROSION CONTROL. TEMPORARY SEEDING IS NECESSARY TO ACHIEVE EROSION CONTROL ON LARGE DENUDED AREAS AND ESPECIALLY WHEN SPECIFICALLY REQUIRED AS PART OF THE CONSTRUCTION SEQUENCE SHOWN ON THE PLAN. ALL PERIMETER DIKES, SWALES, DITCHES, PERIMETER SLOPES AND ALL SLOPES STEEPER THAN 3 HORIZONTAL TO 1 VERTICAL (3:1) SHALL BE PROVIDED TEMPORARY OR PERMANENT STABILIZATION WITH GROUND COVER AS SOON AS PRACTICABLE BUT IN ANY EVENT WITHIN 7 CALENDAR DAYS FROM THE LAST LAND-DISTURBING ACTIVITY. ALL OTHER DISTURBED AREAS SHALL BE PROVIDED TEMPORARY OR PERMANENT STABILIZATION WITH GROUND COVER AS SOON AS PRACTICABLE BUT IN ANY EVENT WITHIN TIME FRAME PER NCG01000 (REFER TO TIME TABLE) FOLLOWING COMPLETION OF CONSTRUCTION OR DEVELOPMENT.
11. CONTRACTOR SHALL BLEND NEW EARTHWORK SMOOTHLY WITH EXISTING CONTOURS.
12. THE TOTAL DENUDED AREA IS 17.0 AC
    THE TOTAL SITE AREA IS 23.57 AC
13. SOIL TYPES ARE: TbB2 (Tarrus gravelly silty clay loam),BaC (Badin channery silt loam)
14. PROJECT SHALL HAVE NO MORE THAN 20 ACRES DISTURBED AT ANY ONE TIME DURING THE COURSE OF THE PROJECT.

NOTE TO CONTRACTOR/DEVELOPERS

MEASURES ARE TO BE INSPECTED AS INSTALLED AFTER EACH OF THE FOLLOWING PHASES OF CONSTRUCTION:

1. INSTALLATION OF PERIMETER EROSION AND SEDIMENT CONTROL MEASURES.
2. INSTALLATION OF SEDIMENT TRAPS/BASINS.
3. CLEARING AND GRUBBING OF EXISTING GROUND COVER
4. COMPLETION OF ANY PHASE OF GRADING THAT REQUIRES PROVISION OF STABILIZATION.
5. INSTALLATION OF MEASURES DURING ANY PHASE OF THE PROJECT.
6. COMPLETION OF CONSTRUCTION OR DEVELOPMENT.
7. INSTALLATION OF STORMWATER RETENTION MEASURES.
8. QUARTERLY UNTIL THE ESTABLISHMENT OF PERMANENT GROUND COVER IS FULLY ESTABLISHED.

SEEDBED PREPARATION GENERAL NOTES:

1. SURFACE WATER CONTROL MEASURES TO BE INSTALLED ACCORDING TO PLAN.
2. LOOSE ROCKS AND OTHER OBSTRUCTIONS SHALL BE REMOVED FROM THE SURFACE SO THAT THEY WILL NOT INTERFERE WITH THE ESTABLISHMENT AND MAINTENANCE OF VEGETATION. SURFACE FOR FINAL SEEDBED PREPARATION, AT FINSH GRADES SHOWN, SHALL BE RESONABLY SMOOTH AND UNIFORM.
3. IF NO SOIL TEST IS TAKEN, FERTILIZER AND LIME TO BE ACCORDING TO SEEDING SPECIFICATIONS LISTED HERE.
4. IF SOIL TEST IS TAKEN, PROVIDE LIME AND FERTILIZER ACCORDING TO SOIL TEST REPORT. ADDITIONAL EROSION CONTROL MEASURES MAY BE REQUIRED DEPENDING ON FIELD CONDITION.

SEEDBED PREPARATION NOTES:

LIMING - APPLY LIME ACCORDING TO SOIL TEST RECOMMENDATIONS. APPLICATION OF GROUND AGRICULTURAL LIMESTONE RATE 1 TO 1 ½ TONS/ACRES ON COARSE-TEXTURED SOILS AND 2-3 TONS/ACRE ON FINE-TEXTURED SOILS IS USUALLY SUFFICIENT. APPLY LIMESTONE UNIFORMLY AND INCORPORATE IN THE TOP 4-6 INCHES OF SOIL. SOILS WITH A pH OF 6 OR HIGHER NEED NOT BE LIMED.

FERTILIZER - APPLY ACCORDING TO SOIL TEST RECOMMENDATIONS OR APPLY A 10-10-10 GRADE FERTILIZER AT 700-1000 LBS/ACRE. INCORPORATE IN THE 4-6 INCHES OF SOIL.

SURFACE ROUGHENING - PER NCDENR STANDARD 6.03.1.

SEEDING - EVENLY APPLY SEED USING A CYCLONE SEEDER (BROADCAST), DRILL, CULTIPACKER SEEDER, OR HYDRO SEEDER. USE RATES GIVEN IN TABLES BELOW.. SMALL GRAINS SHOULD BE PLANTED NO MORE THAN 1 INCH DEEP, AND GRASSES AND LEGUMES NO MORE THAN 1/2 INCH. BROADCAST SEED MUST BE COVERED BY RAKING OR CHAIN DRAGGING, AND THEN LIGTHLY FIRMED WITH ROLLER OR CULTIPACKER. HYDROSEED MIXTURES SHOULD INCLUDE A WOOD FIBER (CELLULOSE) MULCH.

MULCHING - USE APPROPRIATE MULCH TO HELP ENSURE ESTABLISHMENT UNDER NORMAL CONDITIONS. IF AREA MULCHED IS SUBJECT TO CONCENTRATED WATERFLOW, AS IN CHANNELS, ANCHOR MULCH WITH NETTING. (NCDENR-PRACTICE 6.14)

MAINTENANCE - RESEED AND MULCH AREAS WHERE SEEDLINGS EMERGENCE IS POOR OR WHERE EROSION OCCURS AS SOON AS POSSIBLE. DO NOT MOW. PROTECT FROM TRAFFIC AS MUCH AS POSSIBLE.

SEEDING MIXTURE (TEMPORARY)

LATE WINTER EARLY SPRING

SPECIES	RATE (LBS/ACRE)
RYE (GRAIN)	120
ANNUAL LESPEDEZA (KOBE IN PIEDMONT AND COASTAL PLAIN	50

OMIT ANNUAL LESPEDEZA WHEN DURATION OF TEMPORARY COVER IS NOT TO EXTEND BEYOND JUNE.

SEEDING DATES PIEDMONT JAN 1 - MAY 1

SUMMER

SPECIES	RATE (LBS/ACRE)
GERMAN MILLET	40

IN THE PIEDMONT, A SMALL STEMMED SUDANGRASS MAY BE SUBSTITUTED AT AT A RATE OF 50 LBS/ACRE.

SEEDING DATES PIEDMONT MAY 1 - AUG 15

APPLIES TO LATE WINTER/EARLY SPRING AND SUMMER SOIL AMENDMENTS - FOLLOW RECOMMENDATIONS OF SOIL TEST OR APPLY 2000 LBS/ACRE GROUND AGRICULTURAL LIMESTONE AND 750 LBS/ACRE 10-10-10 FERTILIZER.

MULCH - APPLY 4000 LBS/ACRE STRAW. ANCHOR STRAW BY TACKING WITH ASPHALT, NETTING. OR A MULCH ANCHORING TOOL.

MAINTENANCE - REFERTILIZE IF GROWTH IS NOT FULLY ADEQUATE. RESEED, REFERTILIZE AND MULCH IMMEDIATELY FOLLOWING EROSION OR OTHER DAMAGE.

FALL

SPECIES	RATE (LBS/ACRE)
RYE (GRAIN)	120

SEEDING DATES PIEDMONT AUG 15 - DEC 30

SOIL AMENDMENTS - FOLLOW RECOMMENDATIONS OF SOIL TEST OR APPLY 2000 LBS/ACRE GROUND AGRICULTURAL LIMESTONE AND 1000 LBS/ACRE 10-10-10 FERTILIZER.

MULCH - APPLY 4000 LBS/ACRE STRAW. ANCHOR STRAW BY TACKING WITH ASPHALT, NETTING. OR A MULCH ANCHORING TOOL.

MAINTENANCE - REPAIR AND REFERTILIZE DAMAGED AREAS IMMEDIATELY. TOPDRESS WITH 50 LBS/AC OF NITROGEN IN MARCH. IF IT IS NECESSARY TO EXTENT TEMPORARY COVER BEYOND JUNE 15, OVERSEED WITH 50 LBS/ACRE KOBE (PIEDMONT) IN LATE FEBRUARY OR EARLY MARCH.

SEEDING MIXTURE (PERMANENT)

REFER TO NCDENR STANDARD PRACTICE 6.11.1

TREE PROTECTION NOTES:

1. NO SOIL DISTURBANCE OR COMPACTION, CONSTRUCTION MATERIALS, TRAFFIC, BURIAL PITS, TRENCHING OR OTHER LAND DISTURBING ACTIVITY WILL BE ALLOWED IN THE TREE PROTECTION ZONE. TREE BARRICADES MUST BE INSTALLED BEFORE ANY DEMOLITION, GRADING OR CONSTRUCTION BEGINS, AND NOT REMOVED UNTIL FINAL INSPECTION.

2. TREE PROTECTION BARRICADES MUST MEET OR EXCEED TREE ORDINANCE STANDARDS.

3. BEFORE GRADING/CLEARING/CONSTRUCTION BEGINS, CALL FOR INSPECTION OF TREE PROTECTION BARRICADES BY TOWN OF WAXHAW ZONING ADMINISTRATOR AT (704) 843-2195 EXT. 230.

4. NO GRUBBING WITHIN TREE PROTECTION ZONE. LEAVE SOIL AND LEAF LITTER UNDISTURBED. SUPPLEMENT WITH 1-2 INCHES OF MULCH. RE-SEED WITH GRASS ONLY IN DISTURBED/GRADED AREAS.

5. BRUSH, VINES AND SMALL TREES (<8 IN. DIAMETER, OR AS SMALL AS 2 IN. CALIPER) MAY BE HAND-CLEARED ONLY CUT FLUSH WITH GROUND SURFACE. EXISTING TREES MAY BE LIMBED UP 6 FEET (AT LEAST 2/3 OF THE BRANCHES SHOULD BE LEFT) TO IMPROVE VISIBILITY.

6. EXPOSED TREE ROOTS MUST BE CLEANLY CUT WITH A SHARP PRUNING TOOL; BACKFILL AS SOON AS POSSIBLE TO MINIMIZE EXPOSURE TO THE AIR.

7. TREE BARRICADES MUST BE INSTALLED BEFORE ANY DEMOLITION/CLEARING/GRADING CONSTRUCTION, AND NOT REMOVED UNTIL AFTER FINAL INSPECTION BY TOWN OF WAXHAW ZONING ADMINISTRATOR AT (704) 843-2195 EXT. 230.

8. VERIFY UTILITY PLANS SO THAT THERE ARE NO UTILITY CONFLICTS WITH EXISTING AND PROPOSED TREES: ELECTRICAL, TELEPHONE, GAS, SEWER, WATER, AND SITE LIGHTING. CONTACT ENGINEER SHOULD ANY CONFLICT BE FOUND, AND COMMENCE NO WORK UNTIL GIVEN DIRECTION BY THE ENGINEER.

9. TREE PROTECTION FENCE IS TO BE LOCATED PER PLAN OR AT A MINIMUM OF 1 FOOT BEYOND THE DRIP LINE OF THE TREE IN THE SETBACK OR RIGHT-OF-WAY.

DEMOLITION NOTES:

1. CONTRACTOR IS FULLY RESPONSIBLE FOR CONTACTING APPROPRIATE PARTIES AND ASSURING THAT EXISTING UTILITIES ARE LOCATED PRIOR TO BEGINNING CONSTRUCTION.

2. CONTRACTOR SHALL OBTAIN ALL NECESSARY PERMITS.

3. CONTRACTOR SHALL BE RESPONSIBLE FOR COORDINATION AND SEQUENCING OF DEMOLITION OR RELOCATION OF UTILITIES WITH APPLICABLE UTILITY COMPANY.

4. CONTRACTOR TO REMOVE EXISTING STRUCTURES AS DIRECTED BY OWNER. CONTRACTOR TO REMOVE STRUCTURES, FENCES, SHEDS AND MISC. DEBRIS.

5. ALL MATERIAL GENERATED BY THE DEMOLITION, CLEARING AND GRUBBING SHALL BE HAULED FROM THE SITE BY THE CONTRACTOR IN ACCORDANCE WITH ALL THE UNION COUNTY HEALTH DEPARTMENT AND ENVIRONMENTAL PROTECTION DEPARTMENT REGULATIONS AND ORDINANCES.

Know what's **below.**
Call before you dig.

1. Contractor is fully responsible for contacting appropriate parties and assuring that existing utilities are located prior to beginning construction.
2. Contractor is responsible for placing barricades, using flag men, etc. As necessary to ensure the safety of the public.
3. All pavement cuts, asphalt or concrete, are to be placed according to standards of the north carolina department of transportation and town specifications.
4. Shoring will be according to osha trenching standards part 1926, subpart p, or as amended.

MERRICK® & COMPANY
1001 MOREHEAD SQUARE DRIVE, SUITE 530
CHARLOTTE, NC 28203
NC ENGINEERING FIRM F-0908 PHONE: 704.529.6500

THIS AND ANY OTHER ELECTRONIC MEDIA COUNTERPART IS AN INSTRUMENT OF SERVICE PREPARED BY MERRICK AND COMPANY FOR A DEFINED PROJECT. IT IS NOT INTENDED OR REPRESENTED TO BE SUITABLE FOR REUSE IN WHOLE OR IN PART ON EXTENSIONS OF THE PROJECT OR ON ANY OTHER PROJECT. REUSE OR MODIFICATION, OF ANY UTILIZATION IF NOT A FINISHED INSTRUMENT, WITHOUT THE PRIOR EXPRESS WRITTEN CONSENT OF MERRICK AND COMPANY SHALL BE AT THE SOLE RISK FOR THE UNAUTHORIZED USER WITHOUT LIABILITY OR LOSS EXPOSURE TO MERRICK AND COMPANY.

Shea Homes, LLC
8008 Corporate Center Dr.
Suite 300
Charlotte, NC 28226

REVISIONS:

REV	REVISION DESCRIPTION	DATE:	CHANGED BY:	CHECKED BY:	APPROVED BY:
1	Initial Agency Review	03.10.14	CIP	CIP	CIP

		DATE:
DESIGN BY:	SRT	11/18/13
DRAWN BY:	KML	11/18/13
CHECKED BY:	MJK	01/29/14
APPROVED BY:	CIP	01/29/14

Barrington 2
Waxhaw, Union County, NC

Demo & Erosion Control General Notes

NORTH CAROLINA PROFESSIONAL SEAL 032730 ENGINEER CLAUDIA I. PRADO
4/1/14

JOB NO: 65118007
DATE: 01/29/14
SHEET C300

Q:\CHA\Projects\8007-00-Bell Property\Design\CDs\Civil\8007-C300-Erosion.dwg

LEGEND:

SYMBOL

- EXISTING CONTOUR
- PROPOSED CONTOUR
- RIGHT OF WAY
- OUTLET PROTECTION REFER TO DETAILS
- Proposed Stabilized Construction Entrance
- Soil Type Delineation
- Proposed Denuded Limits / Work Limits
- Basin Drainage Area
- Tree Save Area
- Proposed Stone Dam in Silt Fence Opening
- Proposed Silt Fence
- Proposed Porous Baffles
- Proposed Tree Protection
- Proposed Diversion Ditch
- Proposed Check Dam

TBR = To be removed

See sheet C300 for erosion control notes.

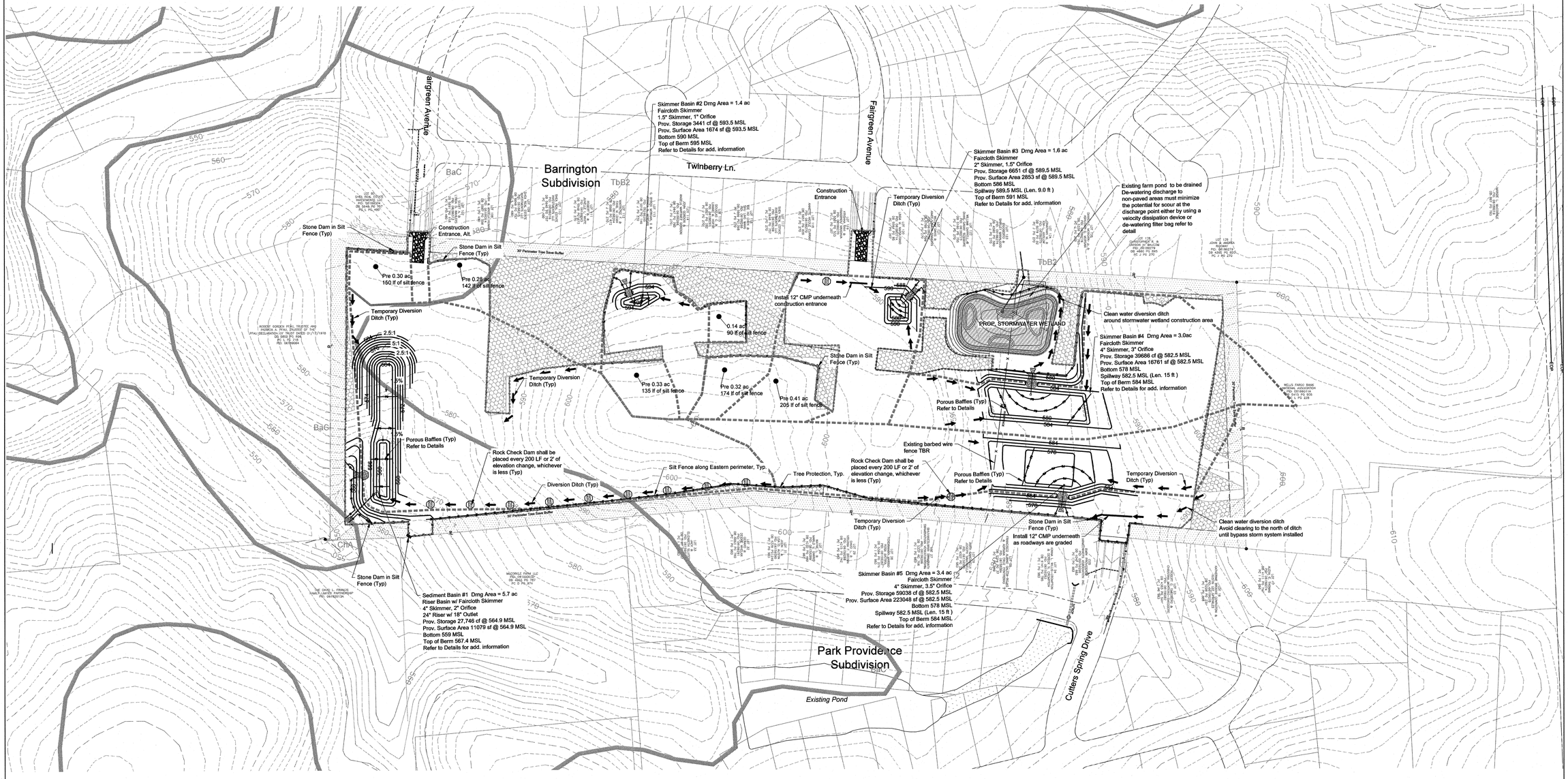

MERRICK & COMPANY
1001 MOREHEAD SQUARE DRIVE, SUITE 530
CHARLOTTE, NC 28204 PHONE: 704.529.6500
NC ENGINEERING FIRM # F-0208

THIS AND ANY OTHER ELECTRONIC MEDIA COUNTERPART IS AN INSTRUMENT OF SERVICE OF MERRICK & COMPANY, AND IS THE PROPERTY OF MERRICK & COMPANY. IT IS NOT INTENDED OR REPRESENTED TO BE SUITABLE FOR REUSE IN WHOLE OR IN PART, EXTENSION OR ADAPTATION, OR FOR ANY OTHER PROJECT, WITHOUT WRITTEN AUTHORIZATION OF MERRICK & COMPANY. ANY REUSE, OR MODIFICATION, OF ANY UTILIZATION OF NOT A PROPERLY AUTHORIZED COPY, WITHOUT WRITTEN AUTHORIZATION OF MERRICK & COMPANY, WILL BE AT THE USER'S SOLE RISK AND WITHOUT LIABILITY OR LEGAL EXPOSURE TO MERRICK AND COMPANY.

Shea Homes, LLC
8008 Corporate Center Dr.
Suite 300
Charlotte, NC 28226

REV	REVISION DESCRIPTION	DATE:	DRAWN BY:	CHECKED BY:	APPROVED BY:
1	Initial Agency Review	04.01.14	CIP	CIP	CIP

REVISIONS:

		DATE:
DESIGN BY:	SKT	11/18/13
DRAWN BY:	KML	11/18/13
CHECKED BY:	MJK	01/29/14
APPROVED BY:	CIP	01/29/14

Barrington 2
Waxhaw, Union County, NC

Demolition & Initial Erosion Control Plan

NORTH CAROLINA PROFESSIONAL SEAL 032730 ENGINEER CLAUDIA I. PRADO
4/1/14

JOB NO: 65118007
DATE: 01/29/14
SHEET C301

\\merrick.com\CES\CHA\Projects\8007-00-Bell Property\Design\CD's\Civil\8007-C300-Erosion.dwg

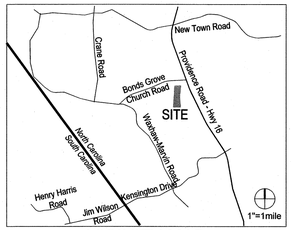

VICINITY MAP

811 Know what's below. Call before you dig.

1. Contractor is fully responsible for contacting appropriate parties and assuring that existing utilities are located prior to beginning construction.
2. Contractor is responsible for placing barricades, using flag men, etc. As necessary to ensure the safety of the public.
3. All pavement cuts, asphalt or concrete, are to be placed according to standards of the north carolina department of transportation and town specifications.
4. Shoring will be according to osha trenching standards part 1926, subpart p, or as amended.

LEGEND:

SYMBOL

- EXISTING CONTOUR
- PROPOSED CONTOUR
- RIGHT OF WAY
- INLET PROTECTION REFER TO DETAILS
- OUTLET PROTECTION REFER TO DETAILS
- Proposed Stabilized Construction Entrance
- Soil Type Delineation
- Proposed Denuded Limits / Work Limits
- Basin Drainage Area
- Tree Save Area
- Proposed Stone Dam in Silt Fence Opening
- Proposed Silt Fence
- Proposed Porous Baffles
- Proposed Tree Protection
- Proposed Diversion Ditch
- Proposed Check Dam

See sheet C300 for erosion control notes.

\\merrick.com\CES\CHA\Projects\8007-00-Bell Property\Design\CDs\Civil\80007-C300-Erosion.dwg

MERRICK & COMPANY
1001 MOREHEAD SQUARE DRIVE, SUITE 530
CHARLOTTE, NC 28203
NC ENGINEERING FIRM # C-0816 PHONE: 704.529.6500

THE ARC AND OTHER ELECTRONIC WORK CONSTRUCT IS AN INSTRUMENT OF SERVICE AND SHALL REMAIN THE PROPERTY OF MERRICK & COMPANY. IT IS NOT INTENDED OR REPRESENTED TO BE SUITABLE FOR REUSE, IN WHOLE OR IN PART, FOR ANY PURPOSE OR PROJECT OTHER THAN THE SPECIFIC PROJECT FOR WHICH IT WAS PREPARED. ANY REUSE, OR MODIFICATION OF ANY REPRODUCTION, IS NOT AN APPROVED REUSE, OR MODIFICATION, OF ANY REPRODUCTION, IF NOT AN APPROVED REUSE, OR MODIFICATION, OF ANY REPRODUCTION, IS AT THE RECIPIENT'S SOLE RISK AND WITHOUT LIABILITY OR LEGAL EXPOSURE TO MERRICK AND CONSULTANTS. REUSE OR MODIFICATION WITHOUT WRITTEN VERIFICATION OR ADAPTATION BY MERRICK AND CONSULTANTS IS PROHIBITED.

Shea Homes, LLC
8008 Corporate Center Dr.
Suite 300
Charlotte, NC 28226

REV	REVISION DESCRIPTION	DATE:	DRAWN:	DESIGN:	APPROVED:
1	Initial Agency Review	04.01.14	CIP	CIP	CIP

REVISIONS:

		DATE:
DESIGN BY:	SRT	11/18/13
DRAWN BY:	KML	11/18/13
CHECKED BY:	MJK	01/29/14
APPROVED BY:	CIP	01/29/14

Barrington 2
Waxhaw, Union County, NC

Final Erosion Control Plan

CLAUDIA I. PRADO
NORTH CAROLINA PROFESSIONAL ENGINEER
SEAL 032730
4/1/14

JOB NO: 65118007
DATE: 01/29/14
SHEET C302

GRADING AND DRAINAGE NOTES

1. REFER TO EROSION CONTROL PLANS FOR EROSION CONTROL NOTES THAT PERTAIN TO ANY DISTURBING ACTIVITY ON THIS SITE.
2. EARTHWORK QUANTITIES HAVE NOT BEEN ESTIMATED AND SITE AS SHOWN IS NOT ASSUMED TO REPRESENT A BALANCED CUT/FILL CONDITION.
3. CONTRACTOR SHALL PERFORM HIS OWN ESTIMATES AND SHALL PROVIDE ALL EARTHWORK NECESSARY TO ACHIEVE THE DESIGN GRADE, INCLUDING ANY OFFSITE BORROW OR SPOILS REQUIRED. CONTRACTOR SHALL PROVIDE POSITIVE DRAINAGE IN ALL GRADED AREAS, INCLUDING PAVING, LAWN AND LANDSCAPE AREAS.
4. THE CONTRACTOR SHALL IMMEDIATELY REPORT TO OWNER ANY DISCREPANCIES FOUND BETWEEN ACTUAL FIELD CONDITIONS AND CONSTRUCTION DOCUMENTS AND SHALL WAIT FOR INSTRUCTION PRIOR TO PROCEEDING.
5. CONTRACTOR SHALL VERIFY LOCATION OF ALL UNDERGROUND UTILITIES PRIOR TO BEGINNING WORK, BOTH PUBLIC AND PRIVATE. CONTRACTOR IS FULLY RESPONSIBLE FOR ALL UNDERGROUND UTILITIES AND SHALL REPAIR ANY DAMAGE AS A RESULT OF THIS CONTRACT.
6. CONTRACTOR SHALL BLEND NEW EARTHWORK SMOOTHLY TO TRANSITION BACK TO EXISTING GRADE.
7. THE PROPOSED CONTOURS AND SPOT ELEVATIONS SHOWN IN DRIVES, PARKING LOTS AND SIDEWALKS ARE FINISHED ELEVATIONS INCLUDING ASPHALT. REFER TO PAVEMENT CROSS SECTION DATA TO ESTABLISH CORRECT SUBBASE OR AGGREGATE BASE COURSE ELEVATIONS TO BE COMPLETED UNDER THIS CONTRACT.
8. ANY GRADING BEYOND THE DENUDED LIMITS INDICATED ON THE CONSTRUCTION DOCUMENTS IS A VIOLATION AND IS SUBJECT TO FINE. GRADING MORE THAN ONE ACRE WITHOUT AN APPROVED EROSION CONTROL PLAN IS A VIOLATION AND IS SUBJECT TO A FINE.
9. CROSS SLOPE OF SIDEWALKS SHALL BE 1/4"/FT. (MAX).
10. PIPE LENGTHS SHOWN ON CULVERTS INCLUDE FLARED END SECTIONS.
11. BORROW PIT/SPOIL AREAS AND VOLUMES AS SHOWN ON THESE PLANS ARE AN APPROXIMATION. THEREFORE THEY MAY BE EXTENDED, ADJUSTED OR MODIFIED ACCORDINGLY AT THE DISCRETION OF THE CONTRACTOR EXCEPT AS LIMITED BY THE DENUDED LIMITS AND BUILDABILITY OF ONSITE FEATURES (SUCH AS THE BUILDINGS). CONTRACTOR SHALL SPOIL EXCESS MATERIAL ON THIS AREA AS SEEN FIT, EXCEPT TO NOT REDUCE GRADE TO LESS THAN 2% AND TO CHANGE DRAINAGE PATTERNS TO STORM STRUCTURES
12. ANY RETAINING WALLS TO BE DESIGNED, SEALED AND CERTIFIED BY CONTRACTOR'S STRUCTURAL ENGINEER . DESIGNED PLANS FOR RETAINING WALL SHALL BE SUBMITTED, REVIEWED AND PERMITTED WITH THE TOWN OF WAXHAW. THE ENGINEER SHALL OF RECORD SHALL PROVIDE THE TOWN OF WAXHAW WITH WRITTEN INSPECTION REPORTS THAT VERIFY ANY RETAINING WALL ON THE SITE WAS CONSTRUCTED AND INSTALLED PER THE APPROVED DESIGN PLAN. THE REPORTS SHALL BE SIGNED AND SEALED BY THE ENGINEER OF RECORD.
13. NON-STANDARD ITEMS (IE: PAVERS, IRRIGATION SYSTEMS, ETC.) IN THE RIGHT-OF-WAY REQUIRE A LOCAL OR STATE ENCROACHMENT AGREEMENT PRIOR TO INSTALLATION.
14. ON-SITE BURIAL PITS REQUIRE A PERMIT.
15. APPROVAL OF CONSTRUCTION DOCUMENTS IS NOT AN AUTHORIZATION TO GRADE ADJACENT PROPERTIES. WHEN FIELD CONDITIONS WARRANT OFF-SITE GRADING, PERMISSION SHALL BE OBTAINED BY CONTRACTOR FROM THE AFFECTED PROPERTY OWNERS.
16. IN ORDER TO ENSURE PROPER DRAINAGE, CONTRACTOR SHALL MAINTAIN A MINIMUM SLOPE OF 0.5%, ALL LOTS TO HAVE 2% POSITIVE DRAINAGE IN ALL DIRECTIONS
17. SUBSURFACE DRAINAGE FACILITIES MAY BE REQUIRED IN THE STREET RIGHT-OF-WAY IF DEEMED NECESSARY BY THE INSPECTOR.
18. THE CONTRACTOR SHALL MAINTAIN EACH STREAM, CREEK, OR BACKWASH CHANNEL IN AN UNOBSTRUCTED CONDITION AND SHALL REMOVE FROM THESE AREAS ALL DEBRIS, LOGS, TIMBER, TRASH, JUNK AND OTHER ACCUMULATIONS.
19. THE LOCAL ENGINEERING DEPARTMENT HAS NOT REVIEWED AND DOES NOT ASSUME RESPONSIBILITY FOR THE STRUCTURAL STABILITY OF ANY EXISTING OR PROPOSED RETAINING WALLS ON THE SITE.
20. NON-STANDARD ITEMS (IE: PAVERS, IRRIGATION SYSTEMS, ETC.) IN THE RIGHT-OF-WAY REQUIRE A LOCAL OR STATE ENCROACHMENT AGREEMENT PRIOR TO INSTALLATION.
21. CONTRACTOR SHALL CONTACT TOWN OF WAXHAW 48 HOURS BEFORE CONSTRUCTION.
22. SHALL NOT BE PERMITTED TO INSTALL ANY STRUCTURES, INCLUDING FENCES, SHEDS OR OTHER PHYSICAL STRUCTURES THAT IMPEDE THE FLOW OF STORMWATER RUNOFF THROUGH THE SWALES THAT RUN THROUGH AND ALONGSIDE SAID PROPERTIES.

KEYNOTES:

- (A) PROPOSED CATCH BASIN PER NCDOT 840.01 REFER TO SHEET C801
- (B) PROPOSED STORM DRAIN MANHOLE PER NCDOT 840.51 REFER TO SHEET C802
- (C) PROPOSED RIP-RAP APRON PER NCDENR REFER TO DETAIL C803
- (D) PROPOSED YARD INLET PER NCDOT DETAIL 840.05 REFER TO SHEET C801
- (E) PROPOSED DETENTION STRUCTURE REFER TO WATER QUALITY PLANS
- (F) PROPOSED FLARED END SECTION REFER TO DETAIL C801
- (G) PROPOSED EROSION CONTROL BLANKET NORTH AMERICAN GREEN OR APPROVED EQUAL. (INSTALL FULL LENGTH OF DITCH AND UP SIDE SLOPE PER MANUFACTURER DIRECTION) REFER TO DETAIL.
- (H) PROPOSED COMPOSITE TURF REINFORCEMENT MAT NORTH AMERICAN GREEN C350 OR APPROVED EQUAL.
- (I) RETAINING WALLS DESIGNED BY OTHERS

811 Know what's below. Call before you dig.

1. Contractor is fully responsible for contacting appropriate parties and assuring that existing utilities are located prior to beginning construction.
2. Contractor is responsible for placing barricades, using flag men, etc. As necessary to ensure the safety of the public.
3. All pavement cuts, asphalt or concrete, are to be placed according to standards of the north carolina department of transportation and town specifications.
4. Shoring will be according to osha trenching standards part 1926, subpart p, or as amended.

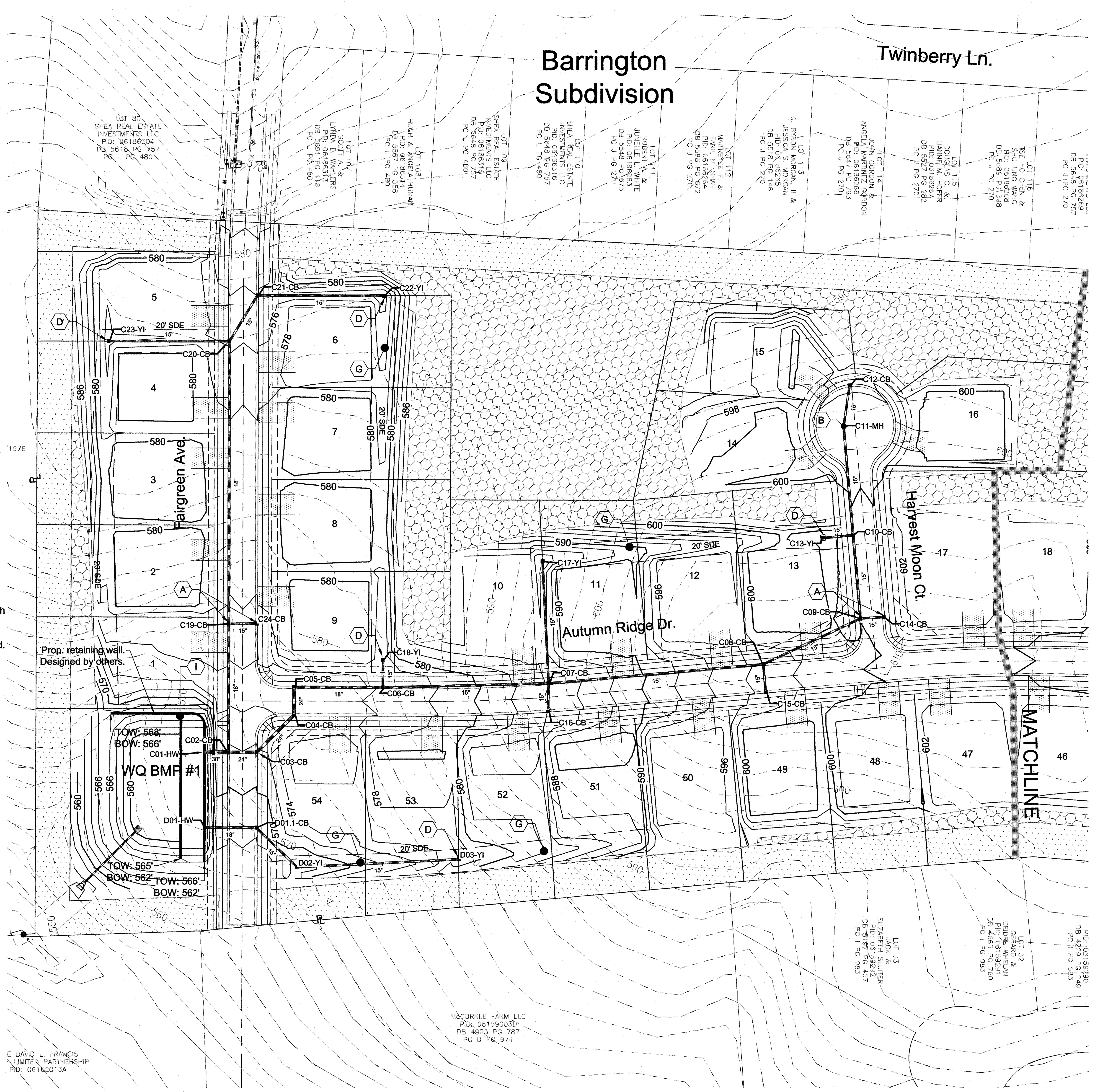

Storm Schedule

InletID	LineID	Size	Slope	Length	Invert Up	Invert Dn	Grnd /RimElev Up	Cover Dn	Cover Up	Material	
		(in)	(%)	(ft)	(ft)	(ft)	(ft)	(ft)	(ft)		
A02-CB	A2-A1	24	0.60	120.01	579.22	578.50	590.13	0.13	8.91	Class III	
A03-CB	A3-A2	18	0.50	231.29	583.83	582.67	587.58	5.96	2.25	Class III	
A04-CB	A4-A3	15	3.88	50.01	586.02	584.08	589.70	2.25	2.43	Class III	
A05-CB	A5-A4	15	3.84	127.85	591.12	586.22	594.87	2.23	2.50	Class III	
A06-CB	A6-A5	15	0.60	24.36	591.47	591.32	594.87	2.30	2.15	Class III	
B07-YI	B7-B3	15	0.50	114.00	585.93	585.36	588.87	2.25	1.69	Class III	
A08-CB	A8-A3	15	0.50	24.30	584.20	584.08	587.58	2.25	2.13	Class III	
A07-CB	A7-A2	18	1.36	24.95	582.01	581.67	590.20	6.96	6.69	Class III	
A09-YI	A9-A7	15	0.58	113.04	582.91	582.26	586.00	6.69	1.84	Class III	
B02-CB	B2-B1	24	0.50	169.52	584.46	583.61	588.87	0.09	2.40	Class III	
B03-CB	B3-B2	18	0.60	24.18	585.11	584.96	588.86	2.40	2.25	Class III	
B04-CB	B4-B3	15	2.92	201.06	591.23	585.36	594.93	2.25	2.45	Class III	
B05-CB	B5-B4	15	3.01	46.08	592.82	591.43	596.66	2.25	2.60	Class III	
B06-CB	B6-B5	15	0.60	24.13	593.16	593.02	596.66	2.40	2.25	Class III	
C02-CB	C2-C1	30	0.50	22.00	560.61	560.50	572.50	0.38	8.48	Class III	
C03-CB	C3-C2	24	0.67	24.20	567.11	566.95	572.50	2.64	2.48	Class III	
C04-CB	C4-C3	24	5.16	46.02	569.68	567.31	575.02	2.28	2.80	Class III	
C05-CB	C5-C4	24	0.60	24.49	570.03	569.88	575.02	2.60	2.46	Class III	
C06-CB	C6-C5	18	1.77	76.68	571.89	570.53	576.35	2.46	2.75	Class III	
C07-CB	C7-C6	15	5.09	144.05	579.47	572.14	583.97	2.75	3.25	Class III	
C08-CB	C8-C7	15	6.26	187.17	591.38	579.67	596.49	3.05	3.86	Class III	
C09-CB	C9-C8	15	0.60	93.30	592.14	591.58	600.06	3.66	6.67	Class III	
C14-CB	C14-C9	15	0.60	20.07	596.55	596.43	600.04	2.38	2.24	Class III	
C10-CB	C10-C9	15	0.60	72.54	592.77	592.34	600.29	6.47	6.26	Class III	
C13-YI	C13-C10	15	0.53	26.00	595.25	595.11	598.19	3.92	1.69	Class III	
C11-MH	C11-C10	15	0.60	95.24	593.55	592.97	599.16	6.06	4.36	Class III	
C12-CB	C12-C11	15	0.60	35.72	593.96	593.75	597.45	4.16	2.24	Class III	
C15-CB	C15-C8	15	0.87	24.22	592.99	592.78	596.49	2.46	2.25	Class III	
C16-CB	C16-C7	15	3.29	24.30	580.47	579.67	583.81	3.05	2.09	Class III	
C17-YI	C17-C7	15	0.60	106.38	580.31	579.67	583.31	3.05	1.75	Class III	
C19-CB	C19-C2	18	0.85	112.04	568.20	567.25	577.24	2.84	7.54	Class III	
C24-CB	C24-C19	15	0.60	24.15	573.75	573.61	577.25	2.38	2.25	Class III	
C18-YI	C18-C6	15	4.50	24.00	573.22	572.14	576.72	2.75	2.25	Class III	
C20-CB	C20-C19	18	0.52	245.84	569.67	568.40	575.58	7.34	4.41	Class III	
C21-CB	C21-C20	15	0.60	46.59	570.20	569.92	573.99	4.41	2.53	Class III	
C22-YI	C22-C21	15	0.51	109.26	570.96	570.40	573.90	2.33	1.69	Class III	
C23-YI	C23-C20	15	1.87	104.55	571.87	569.92	575.37	4.41	2.25	Class III	
E02-CB	E2-E1	24	0.60	64.90	579.51	579.12	584.02	-0.21	2.51	Class III	
E03-CB	E3-E2	24	0.50	30.26	579.86	579.71	584.01	2.31	2.15	Class III	
E04-YI	E4-E3	18	0.74	120.55	581.25	580.36	584.46	2.15	1.71	Class III	
D01.1-CB	D1.1-D1	15	0.50	44.71	560.47	560.25	568.36	0.27	6.64	Class III	O-RING
D02-YI	D2-D1.1	15	0.60	49.58	562.80	562.50	567.00	4.61	2.95	Class III	
D03-YI	D3-D2	15	7.33	140.46	573.30	563.00	576.67	2.75	2.12	Class III	

LEGEND:
CB CURB INLET
DCB DOUBLE CURB INLET
FES FLARED END SECTION
MH MANHOLE/JUNCTION BOX
YI YARD INLET

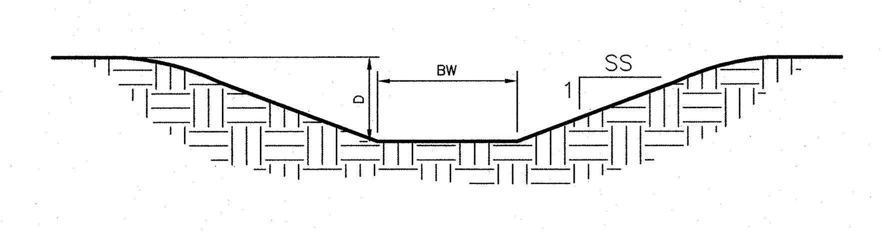

SWALE	BOTTOM WIDTH	SIDE SLOPE	NORMAL WATER DEPTH	DEPTH MIN.	LINING	
YI–E4	2.0'	3:1	0.54'	1.54'	C350	2
YI–D3/D2	1.0'	3:1	0.49'	1.49'	SC150	1
YI–C22/A09	4.0'	3:1 & 2:1	0.42'	1.42'	SC150	1
YI–C17	5.0'	3:1 & 2:1	0.32'	1.32'	SC150	1

1 North American Green SC150 Straw Blanket with netting or approved equal
2 North American Green C350 reinforcement matting or approved equal

NOTE: Normal water depth based on 100yr storm event flows.

GRASS LINED DRAINAGE SWALE Scale: NTS (1)

Note: Seed all swales, see permanent lawn specifications

LEGEND:

SYMBOL		SYMBOL	
	EXISTING CONTOUR		DOUBLE CATCH BASIN (DCB)
	PROPOSED CONTOURS		DROP INLET (DI)
20'SDE	EASEMENT		FLARED END SECTION (FES)
	RIGHT OF WAY		HEADWALL
	CATCH BASIN (CB)		POND OUTLET STRUCTURE WITH RIP RAP APRON
	Tree Save Area		

0 30 60 120 180 240

MERRICK® & COMPANY
1001 MOREHEAD SQUARE DRIVE, SUITE 530
CHARLOTTE, NC 28203
NC ENGINEERING FIRM F-0908 PHONE: 704.529.6500

THIS AND ANY OTHER ELECTRONIC MEDIA COUNTERPART IS AN INSTRUMENT OF SERVICE PREPARED BY MERRICK AND COMPANY FOR A DEFINED PROJECT. IT IS NOT INTENDED OR REPRESENTED TO BE SUITABLE FOR REUSE IN WHOLE OR IN PART ON EXTENSIONS OF THE PROJECT OR ON ANY OTHER PROJECT. REUSE OR MODIFICATION, OF ANY UTILIZATION IF NOT A FINISHED INSTRUMENT, WITHOUT THE PRIOR EXPRESS WRITTEN CONSENT OF MERRICK AND COMPANY SHALL BE AT THE SOLE RISK FOR THE UNAUTHORIZED USER WITHOUT LIABILITY OR LOSS EXPOSURE TO MERRICK AND COMPANY.

Shea Homes, LLC
8008 Corporate Center Dr.
Suite 300
Charlotte, NC 28226

REVISIONS:

REV	REVISION DESCRIPTION	DATE:	CHANGED BY:	CHECKED BY:	APPROVED BY:
2	Redline Town of Waxhaw	04.23.14	CIP	CIP	CIP
1	Initial Agency Review	04.01.14	CIP	CIP	CIP

		DATE:
DESIGN BY:	SRT	11/18/13
DRAWN BY:	KML	11/18/13
CHECKED BY:	MJK	01/29/14
APPROVED BY:	CIP	01/29/14

Barrington 2
Waxhaw, Union County, NC

Grading & Storm Drainage Plan

NORTH CAROLINA PROFESSIONAL SEAL 032730 ENGINEER CLAUDIA I. PRADO 4/23/10

JOB NO: 65118007
DATE: 01/29/14
SHEET C401

\\merrick.com\CES\CHA\Projects\8007-00-Bell Property\Design\CDs\Civil\8007-C400-Grading.dwg

GRADING AND DRAINAGE NOTES

REFER TO SHEET C401 FOR NOTES

KEYNOTES:

- (A) PROPOSED CATCH BASIN PER NCDOT 840.01 REFER TO SHEET C801
- (B) PROPOSED STORM DRAIN MANHOLE PER NCDOT 840.51 REFER TO SHEET C802
- (C) PROPOSED RIP-RAP APRON PER NCDENR REFER TO DETAIL C803
- (D) PROPOSED YARD INLET PER NCDOT DETAIL 840.05 REFER TO SHEET C801
- (E) PROPOSED DETENTION STRUCTURE REFER TO WATER QUALITY PLANS
- (F) PROPOSED FLARED END SECTION REFER TO DETAIL C801
- (G) PROPOSED EROSION CONTROL BLANKET NORTH AMERICAN GREEN OR APPROVED EQUAL. (INSTALL FULL LENGTH OF DITCH AND UP SIDE SLOPE PER MANUFACTURER DIRECTION) REFER TO DETAIL.
- (H) PROPOSED COMPOSITE TURF REINFORCEMENT MAT NORTH AMERICAN GREEN C350 OR APPROVED EQUAL.
- (I) RETAINING WALLS DESIGNED BY OTHERS

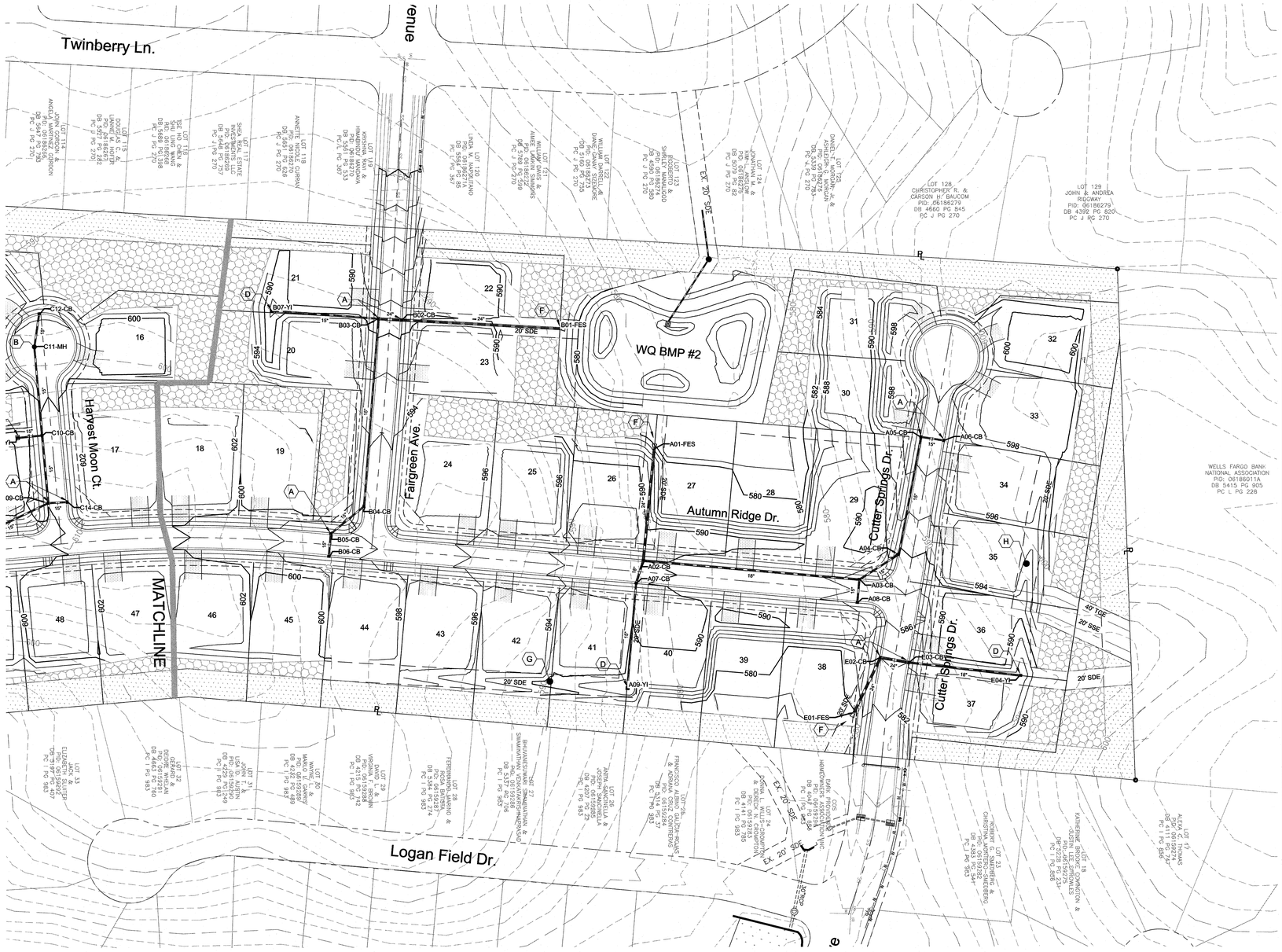

Know what's below. Call before you dig.

1. Contractor is fully responsible for contacting appropriate parties and assuring that existing utilities are located prior to beginning construction.
2. Contractor is responsible for placing barricades, using flag men, etc. As necessary to ensure the safety of the public.
3. All pavement cuts, asphalt or concrete, are to be placed according to standards of the north carolina department of transportation and town specifications.
4. Shoring will be according to osha trenching standards part 1926, subpart p, or as amended.

MERRICK & COMPANY
1001 MORREHEAD SQUARE DRIVE, SUITE 530
CHARLOTTE, NC 28203
NC ENGINEERING FIRM F-0906 PHONE: 704.529.6500

THIS DOCUMENT IS THE PROPERTY OF MERRICK AND COMPANY. ANY REPRODUCTION OF SERVICE PERFORMED BY MERRICK AND COMPANY FOR A DEFINED PROJECT, OR ANY PORTION THEREOF, OR ANY USE OF THE DOCUMENT FOR ANY PURPOSE OTHER THAN THAT FOR WHICH IT WAS PREPARED, OR ANY ALTERATION OF THE DOCUMENT, OR ANY USE OF THE DOCUMENT ON ANY OTHER PROJECT, OR AS A PART OF, OR EXTENSION OF THE PROJECT OR ON ANY OTHER PROJECT, WITHOUT THE PRIOR EXPRESS WRITTEN CONSENT OF MERRICK AND COMPANY, SHALL BE DEEMED AN INFRINGEMENT OF COPYRIGHT. MERRICK AND COMPANY WILL NOT BE LIABLE FOR ANY REUSE OF THE DOCUMENT WITHOUT PRIOR WRITTEN CONSENT OF MERRICK AND COMPANY. LIABILITY OR LOSS EXPOSURE TO MERRICK AND COMPANY.

Shea Homes, LLC

8008 Corporate Center Dr.
Suite 300
Charlotte, NC 28226

REVISIONS:					
REV.	REVISION DESCRIPTION	DATE:	CHANGED BY:	CHECKED BY:	APPROVED BY:
2	Redline Town of Waxhaw	04.23.14	CIP	CIP	CIP
1	Initial Agency Review	04.01.14	CIP	CIP	CIP

		DATE:
DESIGN BY:	SRT	11/18/13
DRAWN BY:	KML	11/18/13
CHECKED BY:	MJK	01/29/14
APPROVED BY:	CIP	01/29/14

Barrington 2

Waxhaw, Union County, NC

Grading & Storm Drainage Plan

NORTH CAROLINA PROFESSIONAL ENGINEER SEAL 032730 CLAUDIA I. PRADO 4/23/14

JOB NO: 65118007

DATE: 01/29/14

SHEET C402

\\merrick.com\CES\CHA\Projects\8007-00-Bell Property\Design\CDs\Civil\8007-C400-Grading.dwg

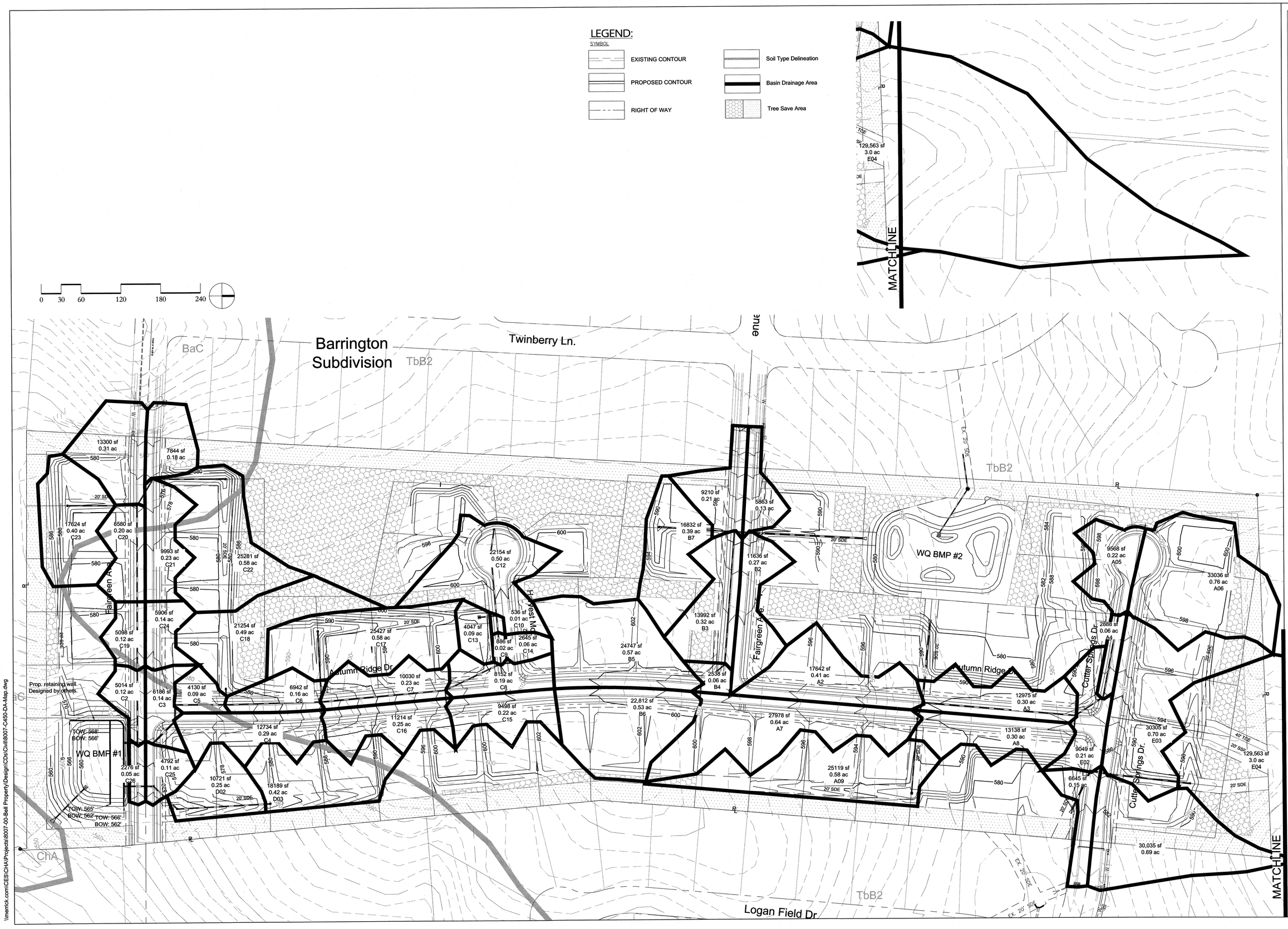

\\merrick.com\CES\CHA\Projects\8007-00-Bell Property\Design\CDs\Civil\8007-C450-DA-Map.dwg

MERRICK® & COMPANY
1001 MOREHEAD SQUARE DRIVE, SUITE 530
CHARLOTTE, NC 28203
NC ENGINEERING FIRM F-0908 PHONE: 704-529.6500

this and any other ELECTRONIC MEDIA COUNTERPART IS AN INSTRUMENT OF SERVICE OF MERRICK & COMPANY, AND IS THE PROPERTY OF MERRICK & COMPANY. IT IS NOT INTENDED OR REPRESENTED TO BE SUITABLE FOR REUSE ON ANOTHER PROJECT OR FOR ANY PURPOSE OTHER THAN THE PROJECT FOR WHICH IT WAS PREPARED, IN WHOLE OR IN PART, WITHOUT THE PRIOR EXPRESS WRITTEN CONSENT OF MERRICK AND COMPANY. REUSE OF, OR RELIANCE BY THIRD PARTIES ON, THIS DOCUMENT WITHOUT WRITTEN CONSENT OF MERRICK AND COMPANY, SHALL BE AT THE USER'S SOLE RISK WITHOUT LIABILITY OR LOSS EXPOSURE TO MERRICK AND COMPANY.

Shea Homes, LLC
8008 Corporate Center Dr.
Suite 300
Charlotte, NC 28226

REVISIONS:				
REV	REVISION DESCRIPTION	DATE:	DRAWN BY:	CHECKED BY: APPROVED BY:
1	Initial Agency Review	04.01.14	CIP	CIP CIP
2	Redline Town of Waxhaw	04.23.14	CIP	CIP CIP

		DATE:
DESIGN BY:	SRT	11/18/13
DRAWN BY:	KML	11/18/13
CHECKED BY:	MJK	01/29/14
APPROVED BY:	CIP	01/29/14

Barrington 2
Waxhaw, Union County, NC

Composite Storm Drainage Areas

NORTH CAROLINA PROFESSIONAL ENGINEER SEAL 032730 CLAUDIA I. PRADO 01/29/14

JOB NO: 65118007
DATE: 01/29/14
SHEET C450

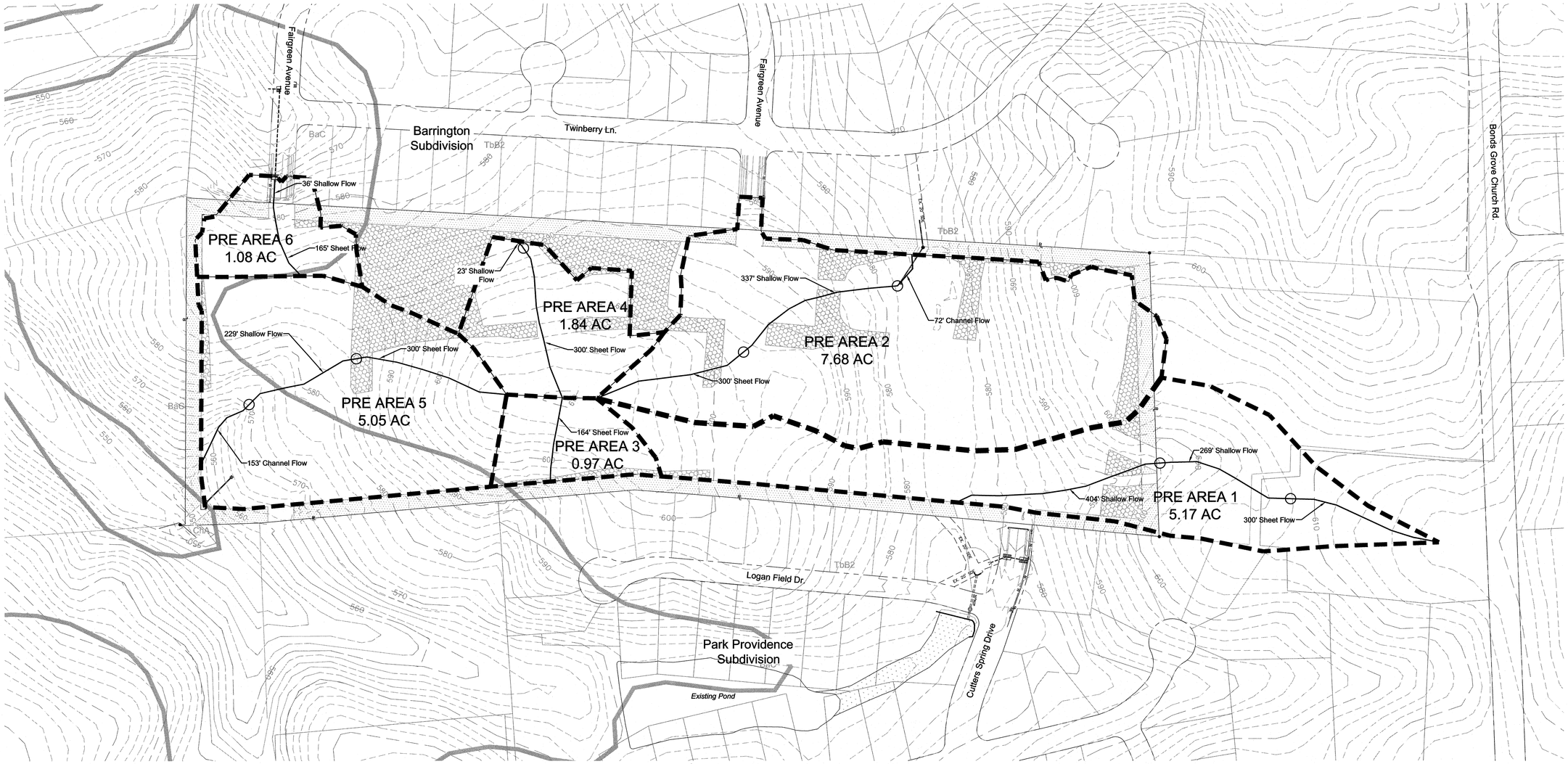

Know what's **below.**
Call before you dig.

1. Contractor is fully responsible for contacting appropriate parties and assuring that existing utilities are located prior to beginning construction.
2. Contractor is responsible for placing barricades, using flag men, etc. As necessary to ensure the safety of the public.
3. All pavement cuts, asphalt or concrete, are to be placed according to standards of the north carolina department of transportation and town specifications.
4. Shoring will be according to osha trenching standards part 1926, subpart p, or as amended.

LEGEND:

SYMBOL

- EXISTING CONTOUR
- PROPOSED CONTOUR
- RIGHT OF WAY
- Soil Type Delineation
- Basin Drainage Area
- Tree Save Area

GRADING DRAINAGE AREA NOTES

1. AREAS AS SHOWN WITHIN THIS DRAWING PERTAIN TO SUCH AREAS AFFECTED BY LAND DISTURBING ACTIVITIES IN THE FINAL BUILD OUT PHASE. AREAS NOT EFFECTED BY PRE OR POST DEVELOPMENT ACTIVITIES ARE EXCLUDED.
2. AN EXCEPTION TO THIS IS WHEN WATER FROM A FINAL BUILD OUT PHASE DRAINS THROUGH AN AREA NOT TO BE DISTURBED AND IN SUCH AN OCCASION THAT AREA IS INCLUDED

0 50 100 200 300 400

MERRICK & COMPANY
1001 MORREHEAD SQUARE DRIVE, SUITE 550
CHARLOTTE, NC 28203
NC ENGINEERING FIRM F-0908 PHONE: 704.529.6500

THE ARC, ART, OTHER ELECTRONIC WORK COUNTERPART & AN INSTRUMENT OF SERVICE AS CREATED BY MERRICK AND COMPANY (MERRICK AND COMPANY) IS A WORK PRODUCT OR REPRESENTATION TO BE SUITABLE FOR REUSE IN WHOLE OR IN PART, AS DETERMINED BY MERRICK AND COMPANY IN ITS SOLE DISCRETION. REUSE OF THE WORK PRODUCT OR REPRESENTATION IN WHOLE OR IN PART, WITHOUT THE PRIOR EXPRESS WRITTEN CONSENT OF MERRICK AND COMPANY, IS PROHIBITED AND MERRICK AND COMPANY DISCLAIMS ANY AND ALL RIGHTS, LIABILITY OR LOSS EXPOSURE TO MERRICK AND COMPANY.

Shea Homes, LLC
8008 Corporate Center Dr.
Suite 300
Charlotte, NC 28226

REVISIONS:

REV	REVISION DESCRIPTION	DATE:	DRAWN BY:	CHECKED BY:	APPROVED BY:
2	Redline Town of Waxhaw	04.23.14	CIP	CIP	CIP
1	Initial Agency Review	04.01.14	CIP	CIP	CIP

		DATE:
DESIGN BY:	SRT	11/18/13
DRAWN BY:	KML	11/18/13
CHECKED BY:	MJK	01/29/14
APPROVED BY:	CIP	01/29/14

Barrington 2
Waxhaw, Union County, NC

Pre-Development Drainage Areas

NORTH CAROLINA PROFESSIONAL SEAL 032730 ENGINEER CLAUDIA I. PRADO 4/23/14

JOB NO: 65118007
DATE: 01/29/14
SHEET C451

\\merrick.com\CES\CHA\Projects\8007-00-Bell Property\Design\CDs\Civil\8007-C450-DA-Map.dwg

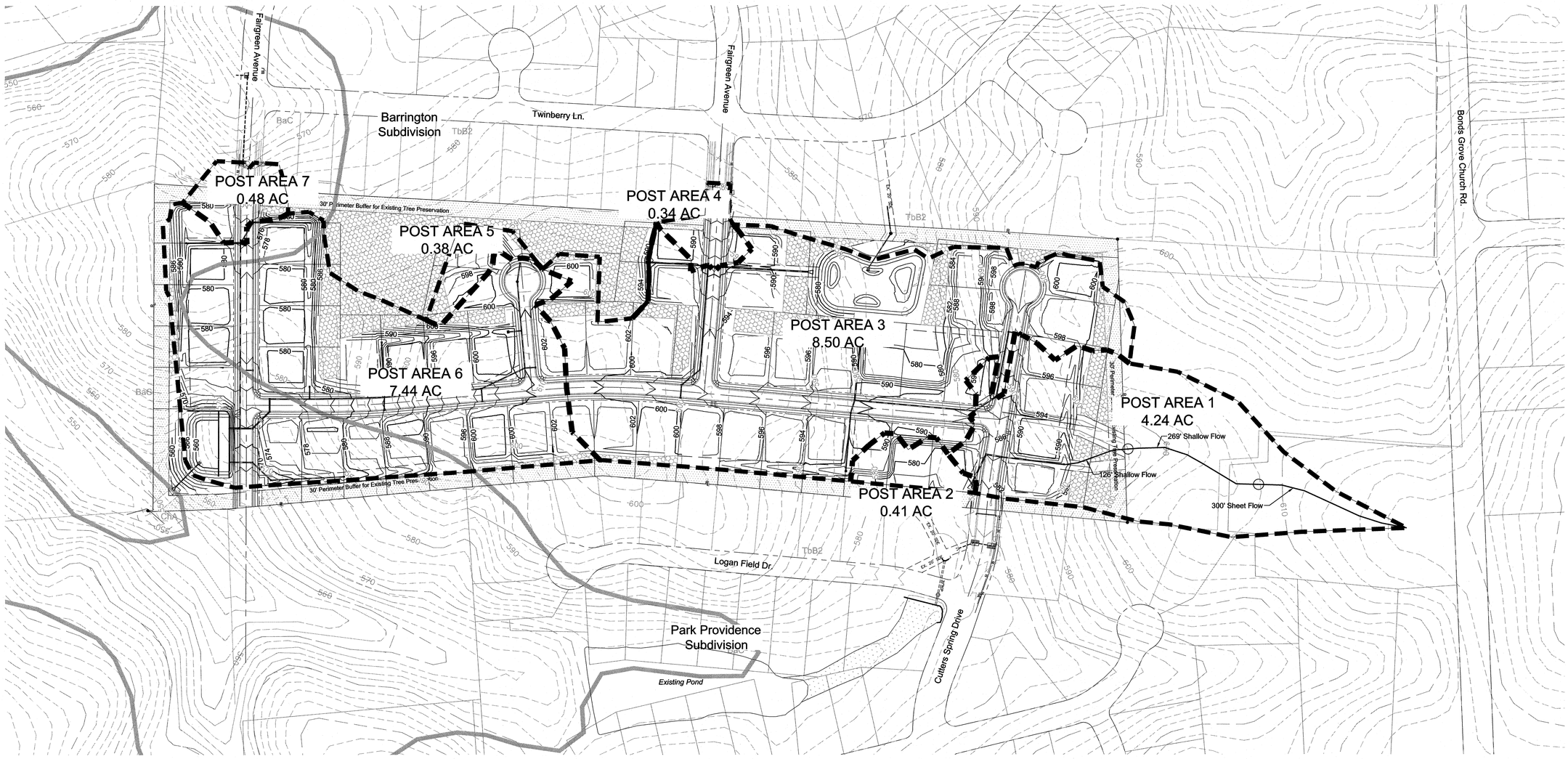

Know what's **below.**
Call before you dig.

1. Contractor is fully responsible for contacting appropriate parties and assuring that existing utilities are located prior to beginning construction.
2. Contractor is responsible for placing barricades, using flag men, etc. As necessary to ensure the safety of the public.
3. All pavement cuts, asphalt or concrete, are to be placed according to standards of the north carolina department of transportation and town specifications.
4. Shoring will be according to osha trenching standards part 1926, subpart p, or as amended.

LEGEND:

SYMBOL

- EXISTING CONTOUR
- PROPOSED CONTOUR
- RIGHT OF WAY
- Soil Type Delineation
- Basin Drainage Area
- Tree Save Area

0 50 100 200 300 400

MERRICK® & COMPANY
1901 MORRIS AND SQUARE DRIVE, SUITE 530
CHARLOTTE, NC 28262
NC ENGINEERING FIRM F-0908 PHONE: 704.529.6500

THE ARE ANY OTHER ELECTRONIC, WITH COPYRIGHT © AN INSTRUMENT OF PROFESSIONAL SERVICE, INCLUDING DRAWINGS AND SPECIFICATIONS, AS WELL AS THOSE CALCULATIONS BY THE PROJECT OR ON ANY PROJECT PROJECT, IS THE PROPERTY OF MERRICK AND COMPANY. THE REPRODUCTION, IN WHOLE OR IN PART, WITHOUT WRITTEN CONSENT OF MERRICK AND COMPANY, IS PROHIBITED. ANY REUSE WITHOUT WRITTEN VERIFICATION OR ADAPTATION BY MERRICK AND COMPANY FOR THE SPECIFIC PURPOSE INTENDED WILL BE AT THE USER'S SOLE RISK AND WITHOUT LIABILITY OR LOSS EXPOSURE TO MERRICK AND COMPANY.

Shea Homes, LLC
8008 Corporate Center Dr.
Suite 300
Charlotte, NC 28226

REVISIONS:

REV	REVISION DESCRIPTION	DATE:	CHANGED BY:	CHECKED BY:	APPROVED BY:
2	Redline Town of Waxhaw	04.23.14	CIP	CIP	CIP
1	Initial Agency Review	04.01.14	CIP	CIP	CIP

		DATE:
DESIGN BY:	SRT	11/18/13
DRAWN BY:	KML	11/18/13
CHECKED BY:	MJK	01/29/14
APPROVED BY:	CIP	01/29/14

Barrington 2
Waxhaw, Union County, NC

Post-Development Drainage Areas

NORTH CAROLINA PROFESSIONAL SEAL 032730 ENGINEER CLAUDIA I. PRADO 1/29/14

JOB NO. 65118007
DATE: 01/29/14
SHEET C452

\\merrick.com\CES\CHA\Projects\86007-00-Bell Property\Design\CDs\Civil\86007-C450-DA-Map.dwg

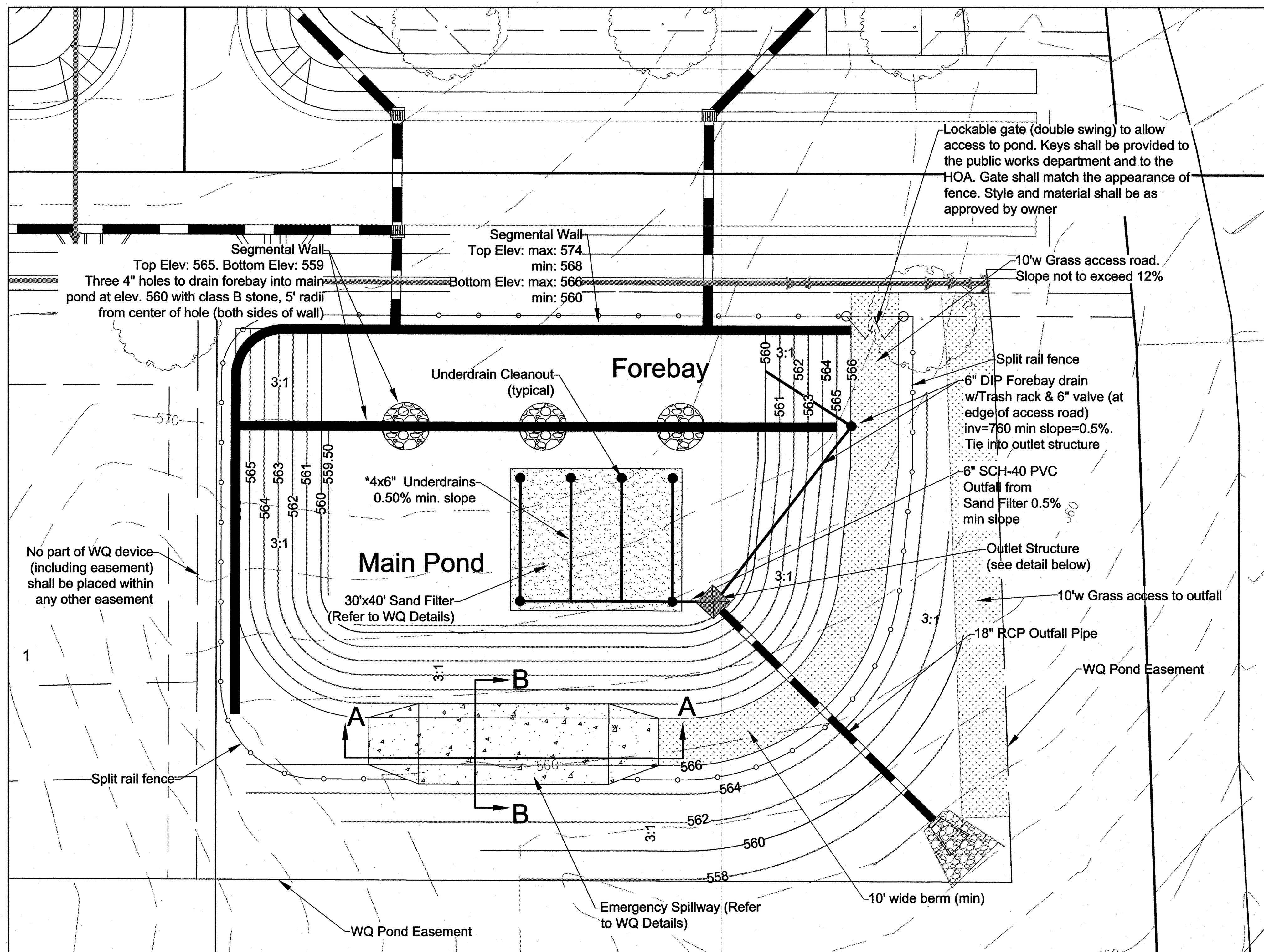

WATER QUALITY BASIN - 1

Main Pool Stage Storage			Forebay Stage Storage			Total Pond Stage Storage		
Elevation (msl)	Area (sf)	Volume (cf)	Elevation (msl)	Area (sf)	Volume (cf)	Elevation (msl)	Area (sf)	Volume (cf)
559.00	3682	0	560.00	0	0	559	3682	0
560.00	3930	3806	560.00	1914	0	560	5844	4763
561.00	4447	7995	561.00	2037	1976	561	6484	10927
562.00	4999	12718	562.00	2160	4074	562	7159	17749
563.00	5573	18004	563.00	2283	6296	563	7856	25256
564.00	6181	23881	564.00	2406	8640	564	8587	33478
565.00	6806	30374	565.00	2529	11108	565	9335	42439
566.00	10118	38836				566	10118	52165

WATER QUALITY BASIN CONSTRUCTION SPECIFICATIONS, WQ POND:

A. EARTHWORK

1. THE FOUNDATION AREA SHALL BE CLEARED OF TREES, LOGS, STUMPS, ROOTS, BOULDERS, SOD AND UNSUITABLE SOIL. IF NEEDED TO ESTABLISH VEGETATION, THE TOPSOIL SHALL BE STOCKPILED AND SPREAD ON THE COMPLETED DAM AND SPILLWAYS. THE FOUNDATION AREA SHALL BE THOROUGHLY SCARIFIED BEFORE PLACEMENT OF THE FILL MATERIAL.
2. EXISTING STREAM CHANNELS IN THE FOUNDATION AREA SHALL BE SLOPED NO STEEPER THAN A RATIO OF TWO HORIZONTAL TO ONE VERTICAL. THEY SHALL BE DEPEENED AND WIDENED AS NECESSARY TO REMOVE ALL STONES, GRAVEL, SAND, STUMPS, ROOTS, AND OTHER OBJECTIONABLE MATERIAL AND TO ACCOMMODATE COMPACTION EQUIPMENT. FOUNDATION AREAS SHALL BE KEPT FREE OF STANDING WATER WHEN FILL IS PLACED ON THEM. THE BORROW AREAS SHALL BE CLEARED OF STUMPS, ROOTS AND UNSUITABLE SOIL. THE WATER QUALITY BASIN SHALL BE CLEARED AND ALL STUMPS REMOVED BEFORE FILLING OPERATIONS BEGIN.
3. THE SOILS ENGINEER WILL TAKE REPRESENTATIVE SAMPLES OF EACH PROPOSED FILL MATERIAL AND TEST THEM TO DETERMINE THE COMPACTION AND CLASSIFICATION CHARACTERISTICS (PROCTOR TEST). ONLY THOSE MATERIALS AS APPROVED BY THE SOILS ENGINEER WILL BE USED AS FILL ON THE DAM. GENERALLY SM OR SC CLASSIFICATION SOILS WILL BE ACCEPTABLE. COMPACTED EARTH FILLS SHALL BE CONSTRUCTED TO THE ELEVATIONS, LINES, GRADES AND CROSS SECTIONS INDICATED ON THE PLANS. AFTER STRIPPING OF FOUNDATIONS AND REMOVAL OF WEAK OR UNSUITABLE MATERIALS HAS BEEN COMPLETED, AND BEFORE START OF MATERIAL PLACEMENT, COMPACTED EARTH SHALL BE USED TO FILL ALL STUMP HOLES, MINOR EXCAVATIONS AND DEPRESSIONS FOR CAVITIES INSIDE THE EARTH FILL LIMITS. FILL SHALL BE PLACED IN HORIZONTAL LAYERS OF NOT MORE THAN (9") LOOSE DEPTH.
4. AFTER STRIPPING OF FOUNDATIONS AND REMOVAL OF WEAK OR UNSUITABLE MATERIALS HAS BEEN COMPLETED, AND BEFORE START OF MATERIAL PLACEMENT, COMPACTED EARTH SHALL BE USED TO FILL ALL STUMP HOLES, MINOR EXCAVATIONS AND DEPRESSIONS FOR CAVITIES INSIDE THE EARTH FILL LIMITS.
5. AS SOON AS FEASIBLE AFTER STARTING CONSTRUCTION OF A FILL. THE CENTRAL PORTION THEROF SHALL BE BUILT AND MAINTAINED SLIGHTLY HIGHER THAN THE SIDES TO ALLOW FREE DRAINAGE TO THE SIDE SLOPES. EACH LAYER OF FILL SHALL BE COMPACTED BY ROLLING WITH COMPACTION EQUIPMENT WHICH IS BEST SUITED FOR THE TYPES OF SOIL ENCOUNTERED. FILL ADJACENT TO PIPE CONDUIT AND ANTISEEP COLLARS SHALL BE COMPACTED BY HAND. EACH LAYER OF FILL SHALL BE COMPACTED TO NOT LESS THAN 95% MAXIMUM DRY DENSITY (STANDARD PROCTOR) AT OPTIMUM MOISTURE CONTENT. WETTING OR DRYING OF THE MATERIAL AND MANIPULATION TO SECURE UNIFORM MOISTURE CONTENT THROUGHOUT EACH LAYER SHALL BE REQUIRED. DENSITY TESTS WILL BE PERFORMED AT A FREQUENCY AS SPECIFIED BY THE SOILS ENGINEER. AS A MINIMUM, TESTS WILL BE PERFORMED ON EVERY THIRD LIFT OR EVERY 1000 CUBIC YARDS WHICHEVER COMES FIRST. ALSO DENSITY TEST WILL BE PERFORMED WHENEVER FILL MATERIAL CHARACTERISTICS CHANGE.

B. OUTLET DEVICE

1. OUTLET DEVICE COMPONENTS ARE TO FABRICATED AS SHOWN ON THE PLANS.
2. CONTRACTOR TO SUBMIT DESIGNED SHOP DRAWINGS TO THE CIVIL ENGINEER FOR APPROVAL PRIOR TO CONSTRUCTION TO THE OUTLET DEVICE. SHOP DRAWINGS SHOULD INCLUDE PRECAST BOX DESIGN, TRACH RACK, GRATED COVER, ALUMINUM STEPS, AND ALL DRAIN/ORIFICE PIPING REQUIRED.

C. CONCRETE

1. ALL CONCRETE SHALL CONFORM TO THE STANDARD SPECIFICATIONS FOR READY MIXED CONCRETE, ASTM C 94. AN AIR-ENTRAINING ADMIXTURE SHALL BE ADDED. THE CONCRETE SHALL BE PROPORTIONED TO MEET THE FOLLOWING REQUIREMENTS:

COMPRESSIVE STRENGTH:	MINIMUM 3600 PSI
WATER-CEMENT RATIO:	0.40 – 0.50
SLUMP:	MINIMUM 3", MAXIMUM 5"
AIR CONTENT:	MINIMUM 5%, MAXIMUM 8%
COARSE AGGREGATE:	1" – 1 1/2"

D. GRASSING

1. GRASS ALL AREAS DISTURBED BY CONSTRUCTION PER SPECIFICATION OF EROSION CONTROL DETAIL SHEET.

E. PLANTING

1. WETLAND PLANTINGS SHALL BE ADDED AS REQUIRED BY STORMWATER BEST MANAGEMENT PRACTICES. PLANTING SHALL BE BASED ON AVAILABILITY OF PLANTS LISTED IN TABLE 2.2 OF NCDENR BEST MANAGEMENT PRACTICES DESIGN GUIDELINES.

NORTH CAROLINA WATERSHEDS

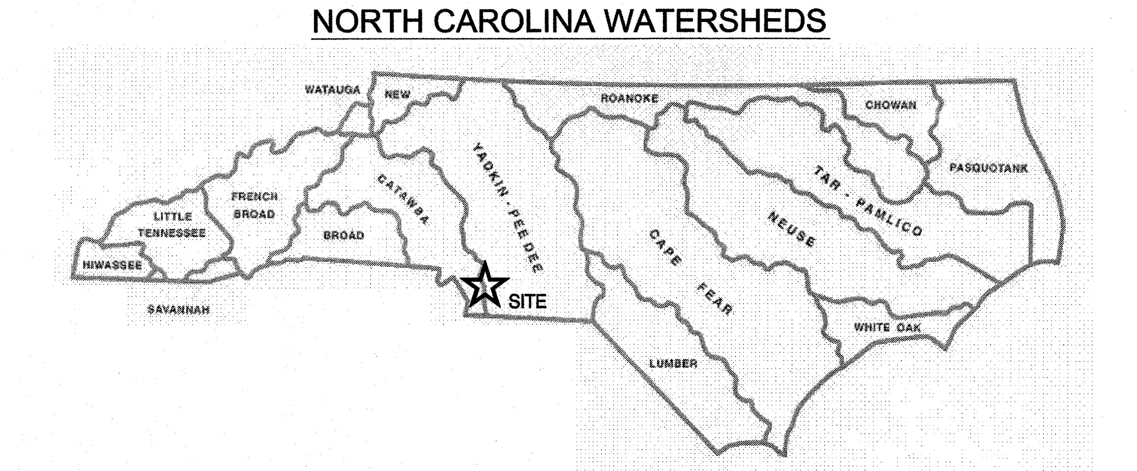

OPERATION AND MAINTENANCE PLAN WQ POND:

A. INSPECT MONTHLY, OR AFTER EVERY RUNOFF-PRODUCING RAINFALL EVENT. WHICHEVER COMES FIRST REMOVE DEBRIS FROM THE TRASH RACK.

1. CHECK AND CLEAR THE ORIFICE OF ANY OBSTRUCTIONS. IF A PUMP IS USED AS A DRAW DOWN MECHANISM, CHECK FOR PUMP OPERATION.
2. CHECK THE POND SIDE SLOPES, REMOVE TRASH, REPAIR ERODED AREAS BEFORE THE NEXT RAINFALL EVENT.
3. IF THE POND IS OPERATED WITH A VEGETATED FILTER, CHECK THE FILTER FOR SEDIMENT ACCUMULATION, EROSION AND PROPER ORIENTATION OF THE FLOW SPREADER MECHANISM. REPAIR AS NECESSARY.

B. QUARTERLY

1. INSPECT THE COLLECTION SYSTEM (IE: CATCH BASINS, PIPING, GRASSED SWALES) FOR PROPER FUNCTIONING. CLEAR ACCUMULATED TRASH FROM BASIN GRATES, BASIN BOTTOMS, AND CHECK PIPING FOR OBSTRUCTIONS.
2. CHECK POND INLET PIPES FOR UNDERCUTTING, REPLACE RIPRAP, AND REPAIR BROKEN PIPES.
3. RESEED GRASSED SWALES, INCLUDING THE VEGETATED FILTER IF APPLICABLE. TWICE A YEAR AS NECESSARY. REPAIR ERODED AREAS IMMEDIATELY.

C. EVERY SIX MONTHS

1. REMOVE ACCUMULATED SEDIMENT FROM THE BOTTOM OF THE OUTLET STRUCTURE.
2. CHECK THE POND DEPTH AT VARIOUS POINTS IN THE POND. IF DEPTH IS REDUCED TO 75% OF ORIGINAL DESIGN DEPTH, SEDIMENT WILL BE REMOVED TO AT LEAST ORIGINAL DESIGN DEPTH.

D. GENERAL

3. MOW THE SIDE SLOPES, NOT INCLUDING NORMALLY SUBMERGED VEGETATED SHELF, ACCORDING TO THE SEASON. MAXIMUM GRASS HEIGHT WILL BE 6".
4. REMOVE WOODY VEGATATION ALONG THE DAM EMBANKMENT.
5. THE ORIFICE IS DESIGNED TO DRAW DOWN THE POND IN 2-5 DAYS. IF DRAW DOWN IS NOT ACCOMPLISHED IN THAT TIME, THE SYSTEM MAY BE CLOGGED. THE SOURCE OF CLOGGING MUST BE FOUND AND ELIMINATED.
6. ALL COMPONENTS OF THE DETENTION POND SYSTEM MUST BE KEPT IN GOOD WORKING ORDER.
7. OWNER SHALL MAINTAIN RECORDS OF ALL INSPECTION REPORTS.

GENERAL NOTES:

POND MAINTENANCE TO BE AS INDICATED IN THE NCDENR STORMWATER BEST MANAGEMENT PRACTICES DESIGN GUIDELINES. REFER TO WATER QUALITY LEGEND FOR PLANTING REQUIREMENTS. POND MAINTENANCE INFORMATION MUST BE PERMANENTLY POSTED ON-SITE. PERMANENT EASEMENT IS NOT SET TO A UNIFROM OFFSET FROM THE WATER QUALITY POND, BUT ADJUSTED TO PROVIDE OPTIMAL ACCESS FOR ACCESSIBILITY AND MAINTAINENCE

WATER QUALITY BASIN INFORMATION

BASIN NUMBER	1
BASIN TYPE	SF/EDD
TOTAL DRAINAGE AREA (AC)	7.44
OFFSITE DRAINAGE (AC)	BYPASSED
DESIGN IMPERVIOUS PERCENTAGE (%)	42.20
MIN. AREA OF SAND FILTER BED* (SF)	3609
MIN. NUMBER OF UNDERDRAINS	3

OUTLET STORM DRAINAGE DESIGN DATA:

UPSTREAM STRUCTURE	DOWNSTREAM STRUCTURE	UPSTREAM INVERT	DOWNSTREAM INVERT	LENGTH (FT)	SIZE (IN)	MIN SLOPE (FT/FT)
OS	RIPRAP APRON	554.50	554.00	±71	18	0.005

ALL PIPE TO BE CLASS III RCP, UNLESS NOTED OTHERWISE.

* THE CONTRACTOR MAY ADJUST THE LAYOUT OF THE SAND FILTER BED AS LONG AS THE MINIMUM AREA REQUIREMENT IS MET, THE UNDERDRAINS TIE INTO THE OUTLET STRUCTURE WITH POSITIVE FLOW AND THE MINIMUM NUMBER OF UNDERDRAINS ARE PROVIDED. IT IS THE CONTRACTOR'S RESPONSIBILITY TO ASSURE POSITIVE FLOW IS MET IN THE INSTALLATION OF THE SAND FILTER

* THE ENGINEER OF RECORD SHALL PROVIDE THE TOWN OF WAXHAW INSPECTION RECORDS AND REPORTS VERIFYING THE SAND FILTER BED HAS BEEN INSTALLED PROPERLY AND ACCORDING TO THE APPROVED PLAN, MEETS THE MINIMUM AREA REQUIREMENT, AND MEETS ALL OTHER ASPECTS OF THE DESIGN. REPORT SHALL ALSO VERIFY ALL ASPECTS OF THE DESIGN HAVE BEEN SUCCESSFULLY INSTALLED ACCORDING TO THE APPROVED PLAN AND SHALL BE SIGNED AND SEALED BY THE ENGINEER OF RECORD.

811 Know what's below. Call before you dig.

1. Contractor is fully responsible for contacting appropriate parties and assuring that existing utilities are located prior to beginning construction.
2. Contractor is responsible for placing barricades, using flag men, etc. As necessary to ensure the safety of the public.
3. All pavement cuts, asphalt or concrete, are to be placed according to standards of the North Carolina Department of Transportation and local government specifications.
4. Shoring will be according to OSHA Trenching Standards Part 1926, Subpart P, or as amended.

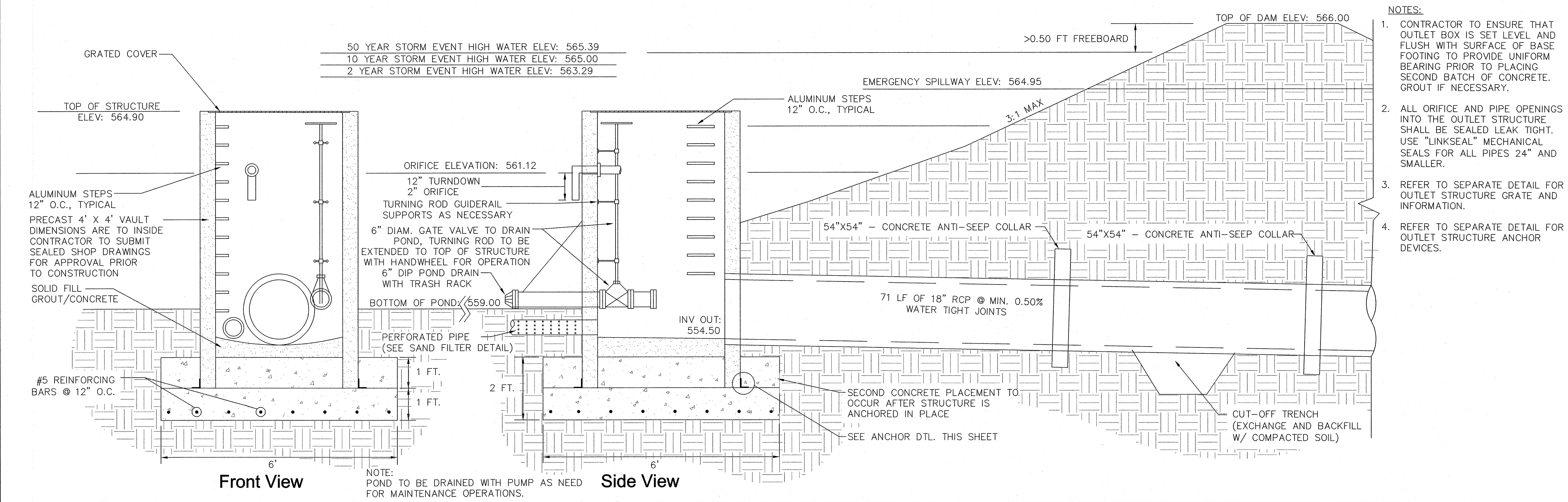

NOTES:

1. CONTRACTOR TO ENSURE THAT OUTLET BOX IS SET LEVEL AND FLUSH WITH SURFACE OF BASE FOOTING TO PROVIDE UNIFORM BEARING PRIOR TO PLACING SECOND BATCH OF CONCRETE. GROUT IF NECESSARY.
2. ALL ORIFICE AND PIPE OPENINGS INTO THE OUTLET STRUCTURE SHALL BE SEALED LEAK TIGHT. USE "LINKSEAL" MECHANICAL SEALS FOR ALL PIPES 24" AND SMALLER.
3. REFER TO SEPARATE DETAIL FOR OUTLET STRUCTURE GRATE AND INFORMATION.
4. REFER TO SEPARATE DETAIL FOR OUTLET STRUCTURE ANCHOR DEVICES.

OUTLET STRUCTURE AND DAM SECTION 1

Q:\CHA\Projects\8007-00-Bell Property\Design\CDs\Civil\8007-C500-WaterQualit-R01.dwg

MERRICK® & COMPANY
1001 MOREHEAD SQUARE DRIVE, SUITE 530
CHARLOTTE, NC 28203
NC ENGINEERING FIRM F-0908 PHONE: 704.529.6500

THIS AND ANY OTHER ELECTRONIC MEDIA COUNTERPART IS AN INSTRUMENT OF SERVICE PREPARED BY MERRICK AND COMPANY FOR A DEFINED PROJECT. IT IS NOT INTENDED OR REPRESENTED TO BE SUITABLE FOR REUSE, IN WHOLE OR IN PART ON EXTENSIONS OF THE PROJECT OR ON ANY OTHER PROJECT. REUSE OR MODIFICATION, OF ANY UTILIZATION IF NOT A FINISHED INSTRUMENT, WITHOUT THE PRIOR EXPRESS WRITTEN CONSENT OF MERRICK AND COMPANY SHALL BE AT THE SOLE RISK FOR THE UNAUTHORIZED USER WITHOUT LIABILITY OR LOSS EXPOSURE TO MERRICK AND COMPANY.

Shea Homes, LLC
8008 Corporate Center Dr.
Suite 300
Charlotte, NC 28226

REVISIONS:

REV	REVISION DESCRIPTION	DATE:	CHANGED BY:	CHECKED BY:	APPROVED BY:
1	Initial Agency Review	03.10.14	CIP	CIP	CIP

		DATE:
DESIGN BY:	SRT	11/18/13
DRAWN BY:	KML	11/18/13
CHECKED BY:	MJK	01/29/14
APPROVED BY:	CIP	01/29/14

Barrington 2
Waxhaw, Union County, NC

WQ Basin 1
Sand Filter

NORTH CAROLINA PROFESSIONAL ENGINEER SEAL 032730 CLAUDIA I. PRADO 3/28/14

JOB NO: 65118007
DATE: 01/29/14
SHEET C501

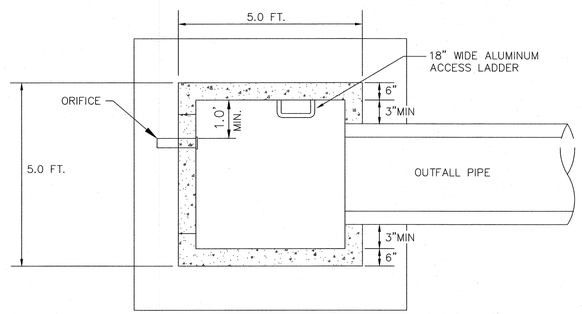

OUTLET STRUCTURE PLAN (7)

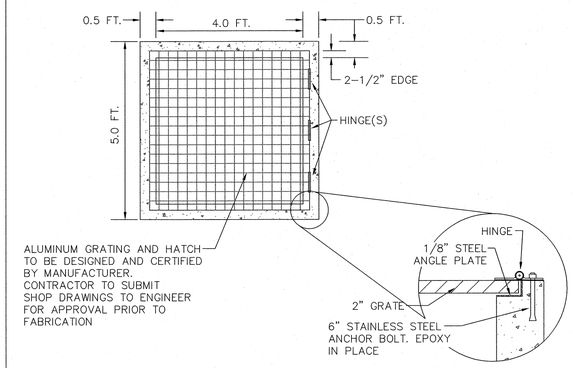

GRATING DETAIL (6)

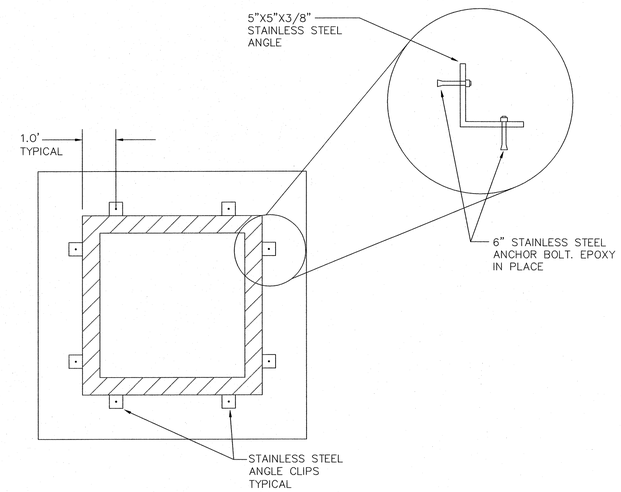

OUTLET STRUCTURE ANCHOR (5)

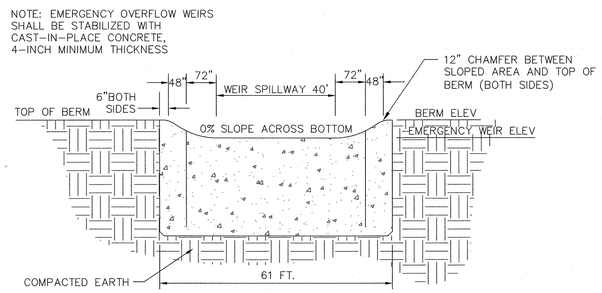

EMERGENCY SPILLWAY- SECTION A-A (4)

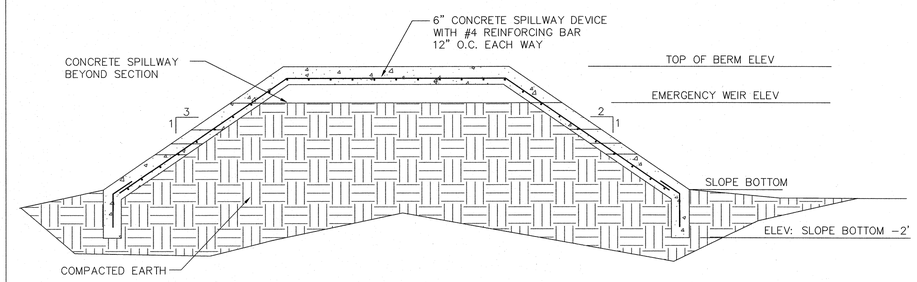

EMERGENCY SPILLWAY - SECTION B-B (3)

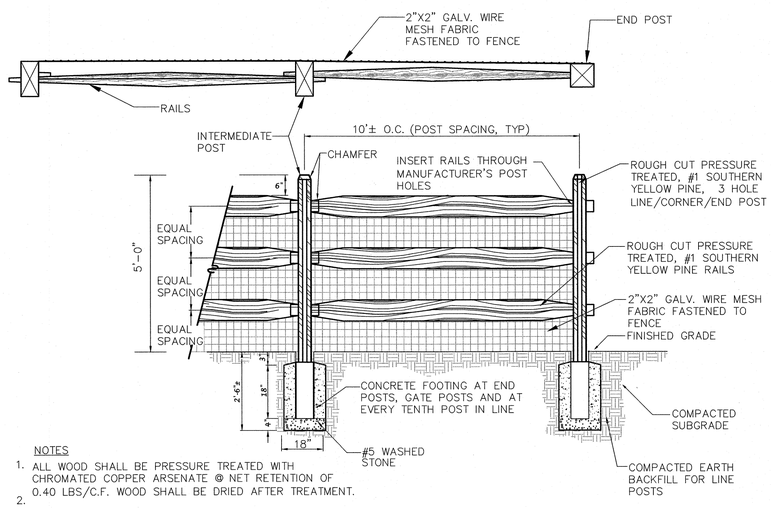

NOTES

1. ALL WOOD SHALL BE PRESSURE TREATED WITH CHROMATED COPPER ARSENATE @ NET RETENTION OF 0.40 LBS/C.F. WOOD SHALL BE DRIED AFTER TREATMENT.
2. BACKFILL ALL POSTS AND RESTORE GRADE AT POST BASE TO ORIGINAL CONDITION. REMOVE ANY EXCESS SOIL FROM POST BASE.

SPLIT RAIL FENCE WITH WIRE MESH (2)

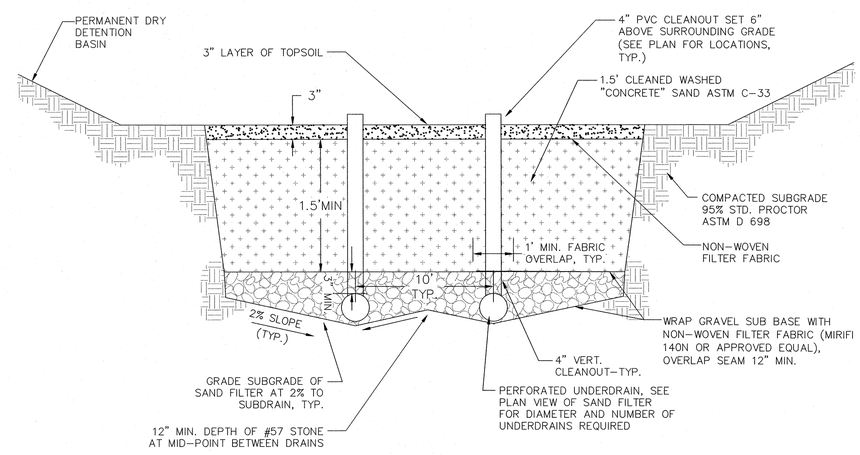

SAND FILTER (1)

MERRICK & COMPANY
10011 MORHEAD SQUARE DRIVE, SUITE 530
CHARLOTTE, NC 28226
NC ENGINEERING FIRM F-0908 PHONE: 704.529.6500

THE ARC, ART, OTHER ELECTRONIC, WEB, COMPUTER, OR INSTRUMENT, FORMS OF REPRESENTATION OF THE DESIGN, DETAILS, DATA, DRAWINGS, OR ANY OTHER INFORMATION, WHICH ARE DISCLOSED OR THE SUBJECT OF OR ON ANY OTHER PROJECT, EXCEPT ON THE PROJECT FOR WHICH THEY WERE PREPARED, IS THE PROPERTY OF MERRICK AND COMPANY. WITHOUT THE PRIOR EXPRESS WRITTEN CONSENT OF MERRICK AND COMPANY, THE USE OF THE DESIGN, DETAILS, DATA, DRAWINGS, OR INFORMATION, WITHOUT LIABILITY OR LOSS EXPOSURE TO MERRICK AND COMPANY.

Shea Homes, LLC
8008 Corporate Center Dr.
Suite 300
Charlotte, NC 28226

REVISIONS:					
REV	REVISION DESCRIPTION	DATE:	CHANGED BY:	CHECKED BY:	APPROVED BY:
1	Initial Agency Review	03.10.14	CIP	CIP	CIP

		DATE:
DESIGN BY:	SRT	11/18/13
DRAWN BY:	KML	11/18/13
CHECKED BY:	MJK	01/29/14
APPROVED BY:	CIP	01/29/14

Barrington 2
Waxhaw, Union County, NC

WQ Basin 1 Sand Filter

NORTH CAROLINA PROFESSIONAL SEAL 032730 ENGINEER CLAUDIA I. PRADO
3/28/14

JOB NO: 65118007
DATE: 01/29/14
SHEET C502

Q:\CHA\Projects\8007-00-Bell Property\Design\CDs\Civil\8007-C500-WaterQuality-R01.dwg

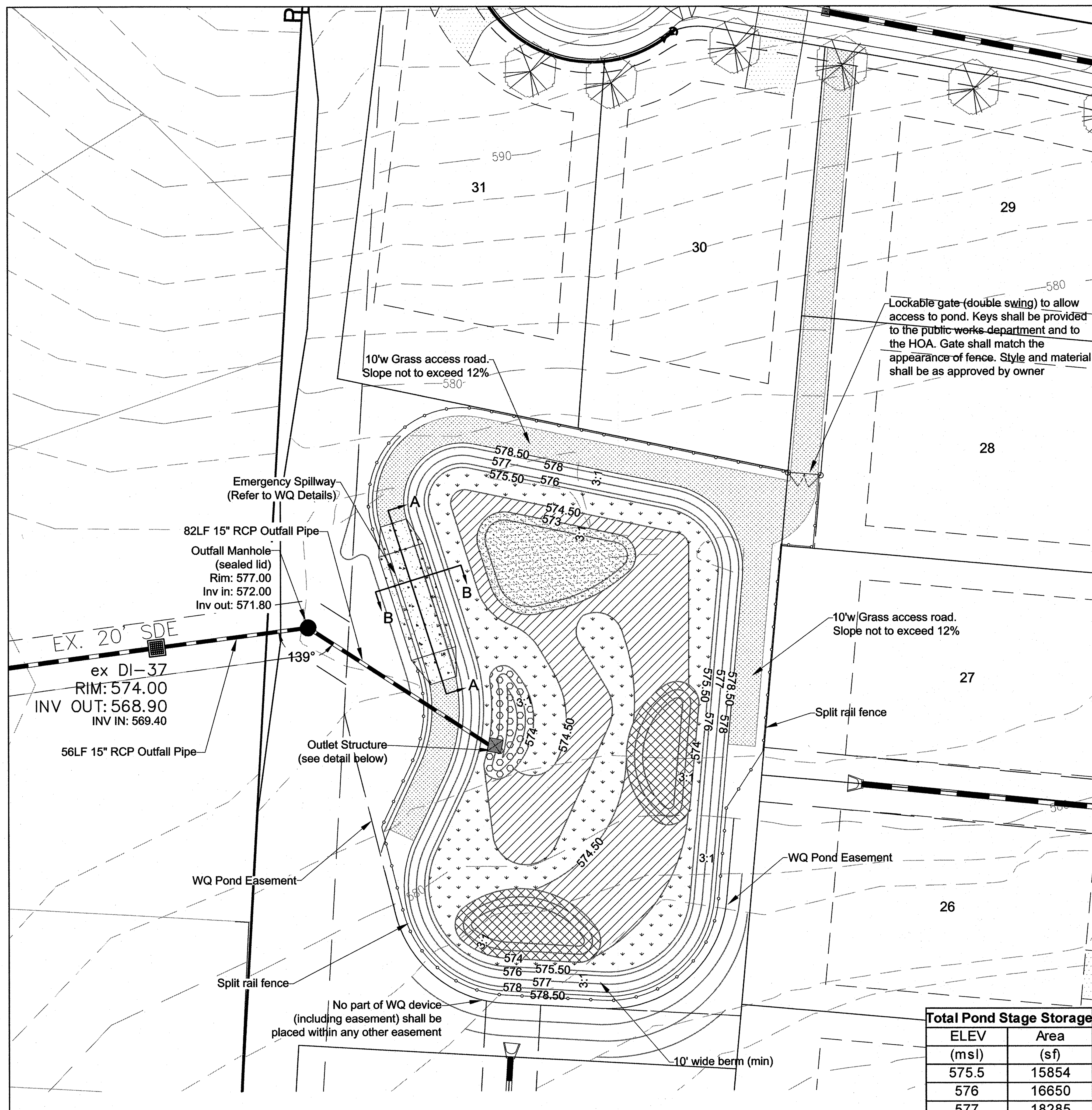

Total Pond Stage Storage	
ELEV	Area
(msl)	(sf)
575.5	15854
576	16650
577	18285
578	19977
578.5	20844

WATER QUALITY BASIN - 2

0 15 30 60 90 120

WATER QUALITY BASIN CONSTRUCTION SPECIFICATIONS, WQ POND:

A. EARTHWORK

1. THE FOUNDATION AREA SHALL BE CLEARED OF TREES, LOGS, STUMPS, ROOTS, BOULDERS, SOD AND UNSUITABLE SOIL. IF NEEDED TO ESTABLISH VEGETATION, THE TOPSOIL SHALL BE STOCKPILED AND SPREAD ON THE COMPLETED DAM AND SPILLWAYS. THE FOUNDATION AREA SHALL BE THOROUGHLY SCARIFIED BEFORE PLACEMENT OF THE FILL MATERIAL.
2. EXISTING STREAM CHANNELS IN THE FOUNDATION AREA SHALL BE SLOPED NO STEEPER THAN A RATIO OF TWO HORIZONTAL TO ONE VERTICAL. THEY SHALL BE DEPEENED AND WIDENED AS NECESSARY TO REMOVE ALL STONES, GRAVEL, SAND, STUMPS, ROOTS, AND OTHER OBJECTIONABLE MATERIAL AND TO ACCOMMODATE COMPACTION EQUIPMENT. FOUNDATION AREAS SHALL BE KEPT FREE OF STANDING WATER WHEN FILL IS PLACED ON THEM. THE BORROW AREAS SHALL BE CLEARED OF STUMPS, ROOTS AND UNSUITABLE SOIL. THE WATER QUALITY BASIN SHALL BE CLEARED AND ALL STUMPS REMOVED BEFORE FILLING OPERATIONS BEGIN.
3. THE SOILS ENGINEER WILL TAKE REPRESENTATIVE SAMPLES OF EACH PROPOSED FILL MATERIAL AND TEST THEM TO DETERMINE THE COMPACTION AND CLASSIFICATION CHARACTERISTICS (PROCTOR TEST). ONLY THOSE MATERIALS AS APPROVED BY THE SOILS ENGINEER WILL BE USED AS FILL ON THE DAM. GENERALLY SM OR SC CLASSIFICATION SOILS WILL BE ACCEPTABLE. COMPACTED EARTH FILLS SHALL BE CONSTRUCTED TO THE ELEVATIONS, LINES, GRADES AND CROSS SECTIONS INDICATED ON THE PLANS. AFTER STRIPPING OF FOUNDATIONS AND REMOVAL OF WEAK OR UNSUITABLE MATERIALS HAS BEEN COMPLETED, AND BEFORE START OF MATERIAL PLACEMENT, COMPACTED EARTH SHALL BE USED TO FILL ALL STUMP HOLES, MINOR EXCAVATIONS AND DEPRESSIONS FOR CAVITIES INSIDE THE EARTH FILL LIMITS. FILL SHALL BE PLACED IN HORIZONTAL LAYERS OF NOT MORE THAN (9") LOOSE DEPTH.
4. AFTER STRIPPING OF FOUNDATIONS AND REMOVAL OF WEAK OR UNSUITABLE MATERIALS HAS BEEN COMPLETED, AND BEFORE START OF MATERIAL PLACEMENT, COMPACTED EARTH SHALL BE USED TO FILL ALL STUMP HOLES, MINOR EXCAVATIONS AND DEPRESSIONS FOR CAVITIES INSIDE THE EARTH FILL LIMITS.
5. AS SOON AS FEASIBLE AFTER STARTING CONSTRUCTION OF A FILL. THE CENTRAL PORTION THEROF SHALL BE BUILT AND MAINTAINED SLIGHTLY HIGHER THAN THE SIDES TO ALLOW FREE DRAINAGE TO THE SIDE SLOPES. EACH LAYER OF FILL SHALL BE COMPACTED BY ROLLING WITH COMPACTION EQUIPMENT WHICH IS BEST SUITED FOR THE TYPES OF SOIL ENCOUNTERED. FILL ADJACENT TO PIPE CONDUIT AND ANTISEEP COLLARS SHALL BE COMPACTED BY HAND. EACH LAYER OF FILL SHALL BE COMPACTED TO NOT LESS THAN 95% MAXIMUM DRY DENSITY (STANDARD PROCTOR) AT OPTIMUM MOISTURE CONTENT. WETTING OR DRYING OF THE MATERIAL AND MANIPULATION TO SECURE UNIFORM MOISTURE CONTENT THROUGHOUT EACH LAYER SHALL BE REQUIRED. DENSITY TESTS WILL BE PERFORMED AT A FREQUENCY AS SPECIFIED BY THE SOILS ENGINEER. AS A MINIMUM, TESTS WILL BE PERFORMED ON EVERY THIRD LIFT OR EVERY 1000 CUBIC YARDS WHICHEVER COMES FIRST. ALSO DENSITY TEST WILL BE PERFORMED WHENEVER FILL MATERIAL CHARACTERISTICS CHANGE.

B. OUTLET DEVICE

1. OUTLET DEVICE COMPONENTS ARE TO FABRICATED AS SHOWN ON THE PLANS.
2. CONTRACTOR TO SUBMIT DESIGNED SHOP DRAWINGS TO THE CIVIL ENGINEER FOR APPROVAL PRIOR TO CONSTRUCTION TO THE OUTLET DEVICE. SHOP DRAWINGS SHOULD INCLUDE PRECAST BOX DESIGN, TRACH RACK, GRATED COVER, ALUMINUM STEPS, AND ALL DRAIN/ORIFICE PIPING REQUIRED.

C. CONCRETE

1. ALL CONCRETE SHALL CONFORM TO THE STANDARD SPECIFICATIONS FOR READY MIXED CONCRETE, ASTM C 94. AN AIR-ENTRAINING ADMIXTURE SHALL BE ADDED. THE CONCRETE SHALL BE PROPORTIONED TO MEET THE FOLLOWING REQUIREMENTS:

COMPRESSIVE STRENGTH:	MINIMUM 3600 PSI
WATER-CEMENT RATIO:	0.40 – 0.50
SLUMP:	MINIMUM 3", MAXIMUM 5"
AIR CONTENT:	MINIMUM 5%, MAXIMUM 8%
COARSE AGGREGATE:	1" – 1 1/2"

D. GRASSING

1. GRASS ALL AREAS DISTURBED BY CONSTRUCTION PER SPECIFICATION OF EROSION CONTROL DETAIL SHEET.

E. PLANTING

1. WETLAND PLANTINGS SHALL BE ADDED AS REQUIRED BY STORMWATER BEST MANAGEMENT PRACTICES. PLANTING SHALL BE BASED ON AVAILABILITY OF PLANTS LISTED IN TABLE 2.2 OF NCDENR BEST MANAGEMENT PRACTICES DESIGN GUIDELINES.

WATER QUALITY BASIN INFORMATION

BASIN NUMBER	1
BASIN TYPE	Wetland
TOTAL DRAINAGE AREA (AC)	8.50
OFFSITE DRAINAGE (AC)	BYPASSED
DESIGN IMPERVIOUS PERCENTAGE (%)	37.18
DEEP POOL AREA (FOREBAY)	10%
DEEP POOL AREA (MAIN POND)	5–10%
SHALLOW WATER AREA	40%
SHALLOW LAND AREA	30–40%

OUTLET STORM DRAINAGE DESIGN DATA:

UPSTREAM STRUCTURE	DOWNSTREAM STRUCTURE	UPSTREAM INVERT	DOWNSTREAM INVERT	LENGTH (FT)	SIZE (IN)	MIN SLOPE (FT/FT)
OS	RIPRAP APRON	572.50	572.00	±82	15	0.005

ALL PIPE TO BE CLASS III RCP, UNLESS NOTED OTHERWISE.

* THE CONTRACTOR MAY ADJUST THE LAYOUT OF THE STORMWATER WETLAND AS LONG AS THE MINIMUM AREA REQUIREMENT IS MET. IT IS THE CONTRACTOR'S RESPONSIBILITY TO ASSURE POSITIVE FLOW IS MET IN THE INSTALLATION OF THE STORMWATER WETLAND

* THE ENGINEER OF RECORD SHALL PROVIDE THE TOWN OF WAXHAW INSPECTION RECORDS AND REPORTS VERIFYING THE SAND FILTER BED HAS BEEN INSTALLED PROPERLY AND ACCORDING TO THE APPROVED PLAN, MEETS THE MINIMUM AREA REQUIREMENT, AND MEETS ALL OTHER ASPECTS OF THE DESIGN. REPORT SHALL ALSO VERIFY ALL ASPECTS OF THE DESIGN HAVE BEEN SUCCESSFULLY INSTALLED ACCORDING TO THE APPROVED PLAN AND SHALL BE SIGNED AND SEALED BY THE ENGINEER OF RECORD.

NORTH CAROLINA WATERSHEDS

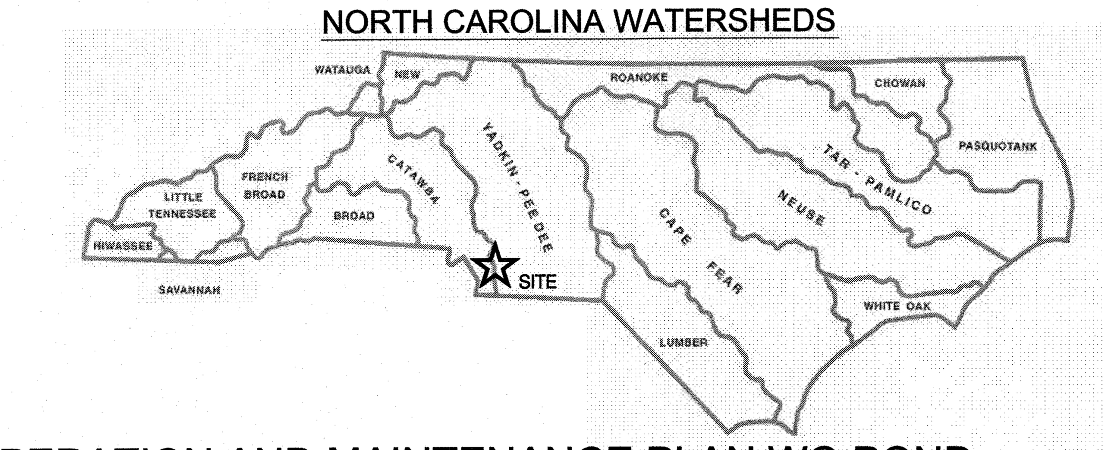

OPERATION AND MAINTENANCE PLAN WQ POND:

A. INSPECT MONTHLY, OR AFTER EVERY RUNOFF-PRODUCING RAINFALL EVENT, WHICHEVER COMES FIRST REMOVE DEBRIS FROM THE TRASH RACK.

1. CHECK AND CLEAR THE ORIFICE OF ANY OBSTRUCTIONS. IF A PUMP IS USED AS A DRAW DOWN MECHANISM, CHECK FOR PUMP OPERATION.
2. CHECK THE POND SIDE SLOPES, REMOVE TRASH, REPAIR ERODED AREAS BEFORE THE NEXT RAINFALL EVENT.
3. IF THE POND IS OPERATED WITH A VEGETATED FILTER, CHECK THE FILTER FOR SEDIMENT ACCUMULATION, EROSION AND PROPER ORIENTATION OF THE FLOW SPREADER MECHANISM. REPAIR AS NECESSARY.

B. QUARTERLY

1. INSPECT THE COLLECTION SYSTEM (IE: CATCH BASINS, PIPING, GRASSED SWALES) FOR PROPER FUNCTIONING. CLEAR ACCUMULATED TRASH FROM BASIN GRATES, BASIN BOTTOMS, AND CHECK PIPING FOR OBSTRUCTIONS.
2. CHECK POND INLET PIPES FOR UNDERCUTTING, REPLACE RIPRAP, AND REPAIR BROKEN PIPES.
3. RESEED GRASSED SWALES, INCLUDING THE VEGETATED FILTER IF APPLICABLE. TWICE A YEAR AS NECESSARY. REPAIR ERODED AREAS IMMEDIATELY.

C. EVERY SIX MONTHS

1. REMOVE ACCUMULATED SEDIMENT FROM THE BOTTOM OF THE OUTLET STRUCTURE.
2. CHECK THE POND DEPTH AT VARIOUS POINTS IN THE POND. IF DEPTH IS REDUCED TO 75% OF ORIGINAL DESIGN DEPTH, SEDIMENT WILL BE REMOVED TO AT LEAST ORIGINAL DESIGN DEPTH.

D. GENERAL

3. MOW THE SIDE SLOPES, NOT INCLUDING NORMALLY SUBMERGED VEGETATED SHELF, ACCORDING TO THE SEASON. MAXIMUM GRASS HEIGHT WILL BE 6".
4. REMOVE WOODY VEGATATION ALONG THE DAM EMBANKMENT.
5. THE ORIFICE IS DESIGNED TO DRAW DOWN THE POND IN 2-5 DAYS. IF DRAW DOWN IS NOT ACCOMPLISHED IN THAT TIME, THE SYSTEM MAY BE CLOGGED. THE SOURCE OF CLOGGING MUST BE FOUND AND ELIMINATED.
6. ALL COMPONENTS OF THE DETENTION POND SYSTEM MUST BE KEPT IN GOOD WORKING ORDER.
7. OWNER SHALL MAINTAIN RECORDS OF ALL INSPECTION REPORTS.

GENERAL NOTES:

1. POND MAINTENANCE TO BE AS INDICATED IN THE NCDENR STORMWATER BEST MANAGEMENT PRACTICES DESIGN GUIDELINES. REFER TO WATER QUALITY LEGEND FOR PLANTING REQUIREMENTS. POND MAINTENANCE INFORMATION MUST BE PERMANENTLY POSTED ON-SITE. PERMANENT EASEMENT IS NOT SET TO A UNIFROM OFFSET FROM THE WATER QUALITY POND, BUT ADJUSTED TO PROVIDE OPTIMAL ACCESS FOR ACCESSIBILITY AND MAINTENANCE.
2. FOR THIS WETLAND UTILIZING AN EXISTING CLAY LINED UNDESIGNATED POND ON-SITE, AT LEAST FOUR (4) INCHES OF QUALITY TOP SOIL SHALL BE ADDED TO THE TOP OF THE LINER TO SUPPORT PLANT GROWTH. IMPORTED OR IN-SITU SOILS MAY BE AMENDED WITH ORGANIC MATERIAL, DEPENDING ON SOIL ANALYSIS RESULTS, TO ENHANCE SUITABILITY OF PLANT MEDIA

811 Know what's **below.** **Call** before you dig.

1. Contractor is fully responsible for contacting appropriate parties and assuring that existing utilities are located prior to beginning construction.

2. Contractor is responsible for placing barricades, using flag men, etc. As necessary to ensure the safety of the public.

3. All pavement cuts, asphalt or concrete, are to be placed according to standards of the North Carolina Department of Transportation and local government specifications.

4. Shoring will be according to OSHA Trenching Standards Part 1926, Subpart P, or as amended.

WATER QUALITY LEGEND/PLANTING:

SYMBOL	DESCRIPTION	SYMBOL	DESCRIPTION
(rip rap)	RIP RAP APRON	(dots)	DEEP POOL 18"–36"
(hatch)	SHALLOW WATER ZONE 3"–6" LOW MARSH AREA (*)	(crosshatch)	FOREBAY 18"–36"
(marsh symbols)	SHALLOW LAND ZONE <12" HIGH MARSH AREA (*)	(hexagons)	MICROPOOL 18"–36"

(*) REFER TO PLANTING LEGEND FOR REQUIRED PLANTING IN VARIOUS ZONE DEPTHS

WATER QUALITY BASIN A PLANT SCHEDULE:

ZONE	BOTANICAL NAME	COMMON NAME	SIZE	AREA (SF)	SPAC. OC	%	QUANT.	PATTERN
Shallow land	*Asclepias Incarnata*	Swamp Milkweed	min 4 cubic-inch container	3932	18"	20%	343	TRI
Shallow land	*Hibiscus Coccineus*	Scarlett Rose Mallow	min 4 cubic-inch container	3932	18"	20%	343	TRI
Shallow land	*Lobelia Elongata*	Longleaf Lobelia	min 4 cubic-inch container	3932	18"	20%	343	TRI
Shallow land	*Clethra Alnifolia*	Sweet Pepperbrush	min 1 gallon container	3932	36"	20%	201	TRI
Shallow land	*Ilex Glabra*	Inkberry	min 1 gallon container	3932	36"	20%	201	TRI
Shallow water	*alisma subcordatum*	Water Plantain	min 4 cubic-inch container	6264	18"	25%	693	TRI
Shallow water	*Irise Virginica*	Blue Flag Iris	min 4 cubic-inch container	6264	18"	25%	693	TRI
Shallow water	*Peltandra Virginica*	Arrow Arum	min 4 cubic-inch container	6264	18"	25%	693	TRI
Shallow water	*Saururus Cernuus*	Lizard's Tail	min 4 cubic-inch container	6264	18"	25%	693	TRI
Deep pool	*Nelumbo Lutea*	American Lotus	min 4 cubic-inch container	1570	36"	50%	74	TRI
Deep pool	*Elodea Canadensis*	Canadian Waterweed	min 4 cubic-inch container	1570	36"	50%	74	TRI

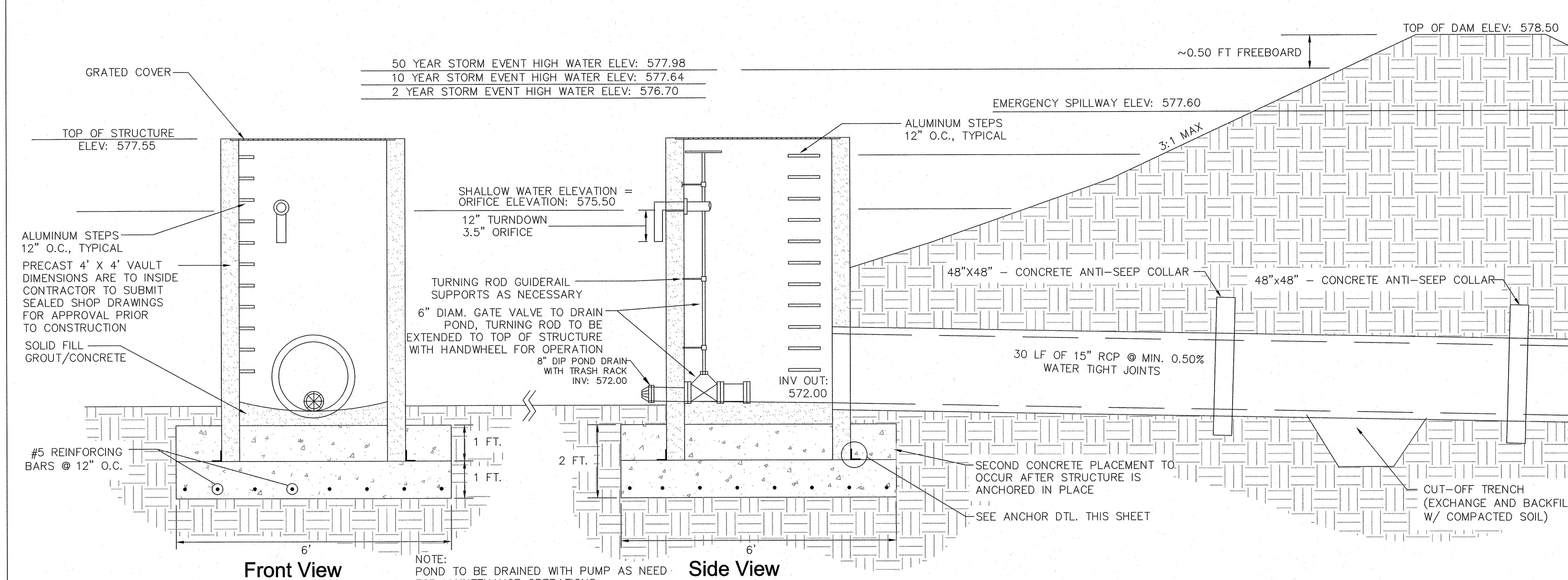

NOTES:

1. CONTRACTOR TO ENSURE THAT OUTLET BOX IS SET LEVEL AND FLUSH WITH SURFACE OF BASE FOOTING TO PROVIDE UNIFORM BEARING PRIOR TO PLACING SECOND BATCH OF CONCRETE. GROUT IF NECESSARY.
2. ALL ORIFICE AND PIPE OPENINGS INTO THE OUTLET STRUCTURE SHALL BE SEALED LEAK TIGHT. USE "LINKSEAL" MECHANICAL SEALS FOR ALL PIPES 24" AND SMALLER.
3. REFER TO SEPARATE DETAIL FOR OUTLET STRUCTURE GRATE AND INFORMATION.
4. REFER TO SEPARATE DETAIL FOR OUTLET STRUCTURE ANCHOR DEVICES.

OUTLET STRUCTURE AND DAM SECTION (1)

Q:\CHA\Projects\8007-00-Bell Property\Design\CDs\Civil\8007-C500-WaterQualit-R01.dwg

MERRICK® & COMPANY
1001 MOREHEAD SQUARE DRIVE, SUITE 530
CHARLOTTE, NC 28203 PHONE: 704.529.6500
NC ENGINEERING FIRM F-0908

THIS AND ANY OTHER ELECTRONIC MEDIA COUNTERPART IS AN INSTRUMENT OF SERVICE PREPARED BY MERRICK AND COMPANY FOR A DEFINED PROJECT. IT IS NOT INTENDED OR REPRESENTED TO BE SUITABLE FOR REUSE IN WHOLE OR IN PART ON EXTENSIONS OF THE PROJECT OR ON ANY OTHER PROJECT. REUSE OR MODIFICATION, OF ANY UTILIZATION IF NOT A FINISHED INSTRUMENT, WITHOUT THE PRIOR EXPRESS WRITTEN CONSENT OF MERRICK AND COMPANY SHALL BE AT THE SOLE RISK FOR THE UNAUTHORIZED USER WITHOUT LIABILITY OR LOSS EXPOSURE TO MERRICK AND COMPANY.

Shea Homes, LLC
8008 Corporate Center Dr.
Suite 300
Charlotte, NC 28226

REVISIONS:

REV	REVISION DESCRIPTION	DATE:	CHANGED BY:	CHECKED BY:	APPROVED BY:
1	Initial Agency Review	03.10.14	CIP	CIP	CIP

		DATE:
DESIGN BY:	SRT	11/18/13
DRAWN BY:	KML	11/18/13
CHECKED BY:	MJK	01/29/14
APPROVED BY:	CIP	01/29/14

Barrington 2
Waxhaw, Union County, NC

WQ Basin 2
Wetland

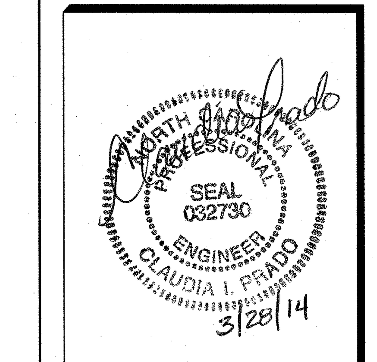

JOB NO: 65118007
DATE: 01/29/14
SHEET C503

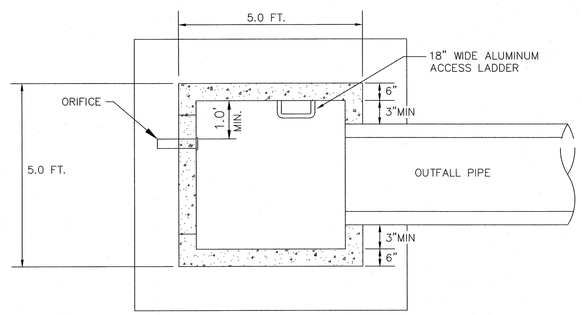

OUTLET STRUCTURE PLAN (7)

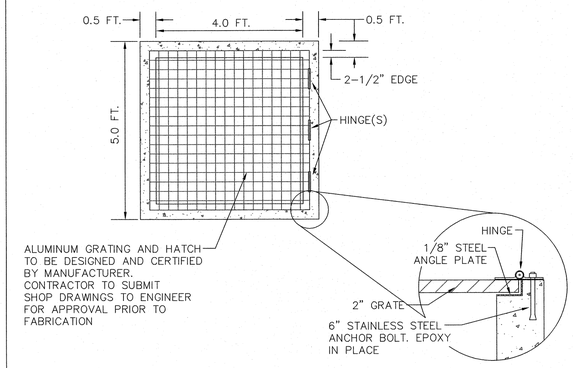

GRATING DETAIL (6)

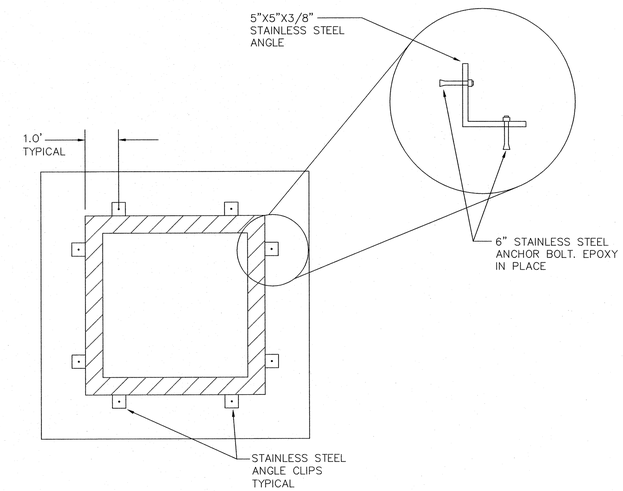

OUTLET STRUCTURE ANCHOR (5)

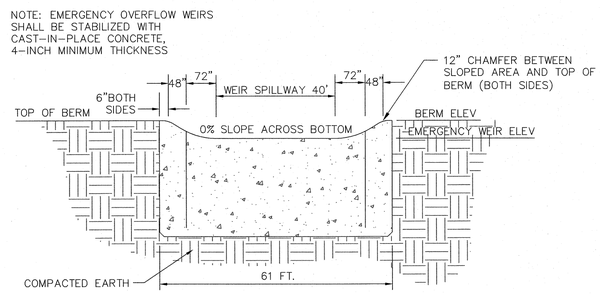

EMERGENCY SPILLWAY- SECTION A-A (4)

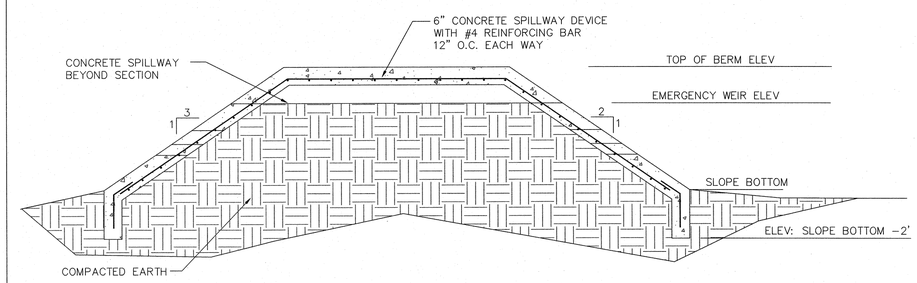

EMERGENCY SPILLWAY - SECTION B-B (3)

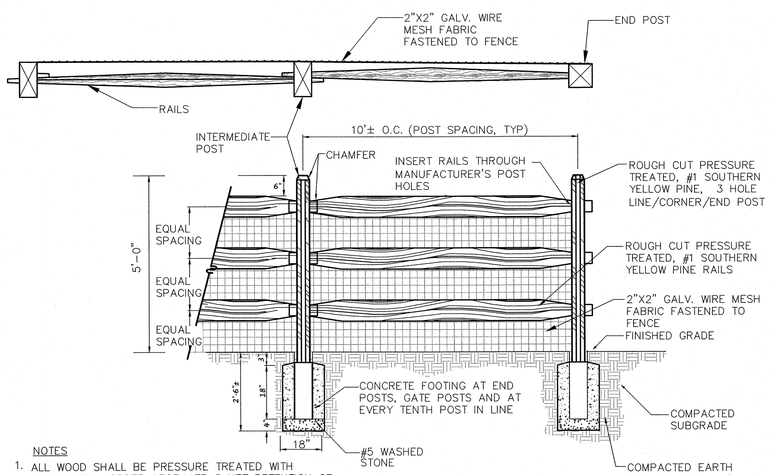

NOTES

1. ALL WOOD SHALL BE PRESSURE TREATED WITH CHROMATED COPPER ARSENATE @ NET RETENTION OF 0.40 LBS/C.F. WOOD SHALL BE DRIED AFTER TREATMENT.
2. BACKFILL ALL POSTS AND RESTORE GRADE AT POST BASE TO ORIGINAL CONDITION. REMOVE ANY EXCESS SOIL FROM POST BASE.

SPLIT RAIL FENCE WITH WIRE MESH (2)

MERRICK & COMPANY
11701 LAKEWOOD BLVD
CHARLOTTE, NC 28273
NC ENGINEERING FIRM F-0908
PHONE: 704.529.6500

THIS DOCUMENT IS THE PROPERTY OF MERRICK AND ASSOCIATES, BY WRONG, MERRICK AND COMPANY FOR A SPECIFIC PROJECT. IT IS NOT INTENDED FOR USE ON ANY OTHER PROJECT, EXTENSION TO THIS PROJECT, OR ON ANY OTHER PROJECT. ANY REUSE, IN WHOLE OR IN PART, WITHOUT WRITTEN CONSENT OF MERRICK AND COMPANY, IS PROHIBITED AND WITHOUT SUCH WRITTEN CONSENT, MERRICK AND COMPANY, WITHOUT THE PRIOR EXPRESS WRITTEN CONSENT OF MERRICK AND COMPANY, DISCLAIMS ANY RESPONSIBILITY FOR SUCH REUSE. THE REUSER AGREES TO LIABILITY OR LOSS EXPOSURE TO MERRICK AND COMPANY.

Shea Homes, LLC
8008 Corporate Center Dr.
Suite 300
Charlotte, NC 28226

REVISIONS:					
REV	REVISION DESCRIPTION	DATE:	DRAWN BY:	CHECKED BY:	APPROVED BY:
1	Initial Agency Review	03.10.14	CIP	CIP	CIP

		DATE:
DESIGN BY:	SRT	11/18/13
DRAWN BY:	KML	11/18/13
CHECKED BY:	MJK	01/29/14
APPROVED BY:	CIP	01/29/14

Barrington 2
Waxhaw, Union County, NC

WQ Basin 2
Stormwater Wetland

NORTH CAROLINA PROFESSIONAL SEAL 032730 ENGINEER CLAUDIA I. PRADO
3/28/14

JOB NO.: 65118007
DATE: 01/29/14
SHEET C504

Q:\CHA\Projects\8007-00-Ball Property\Design\CDs\Civil\8007-C500-WaterQuality-R01.dwg

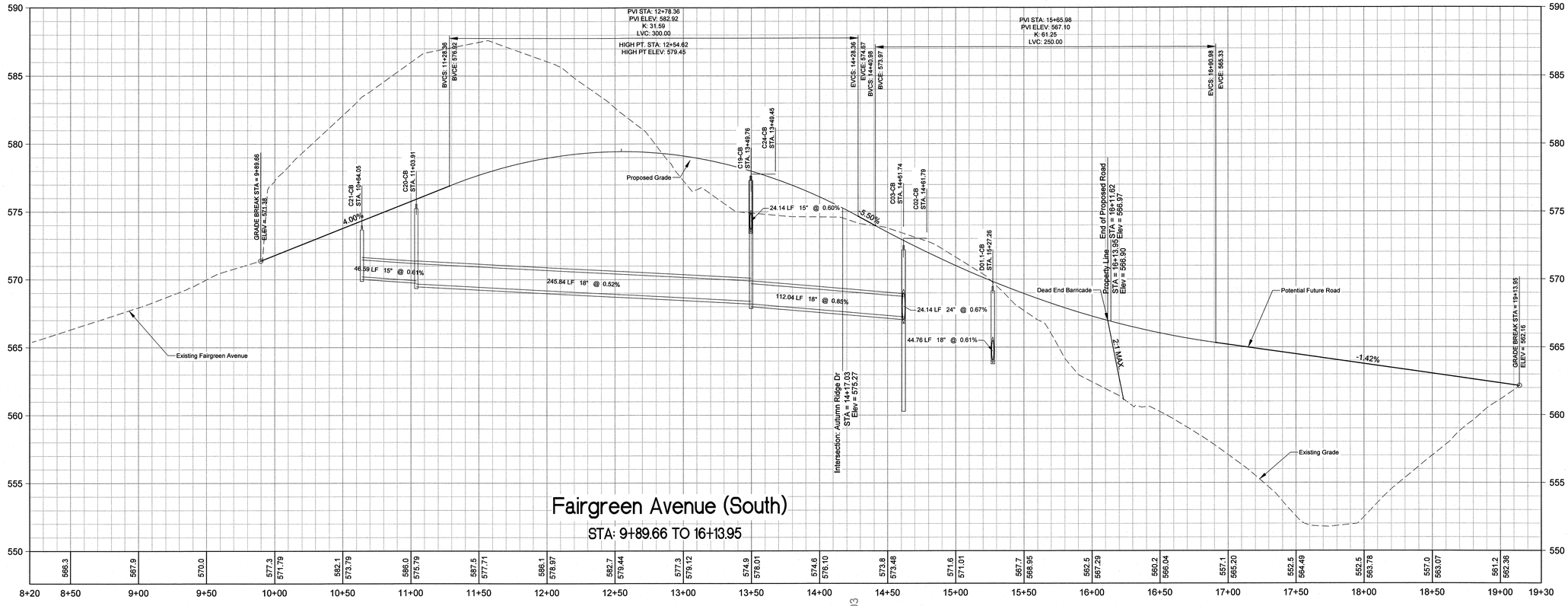

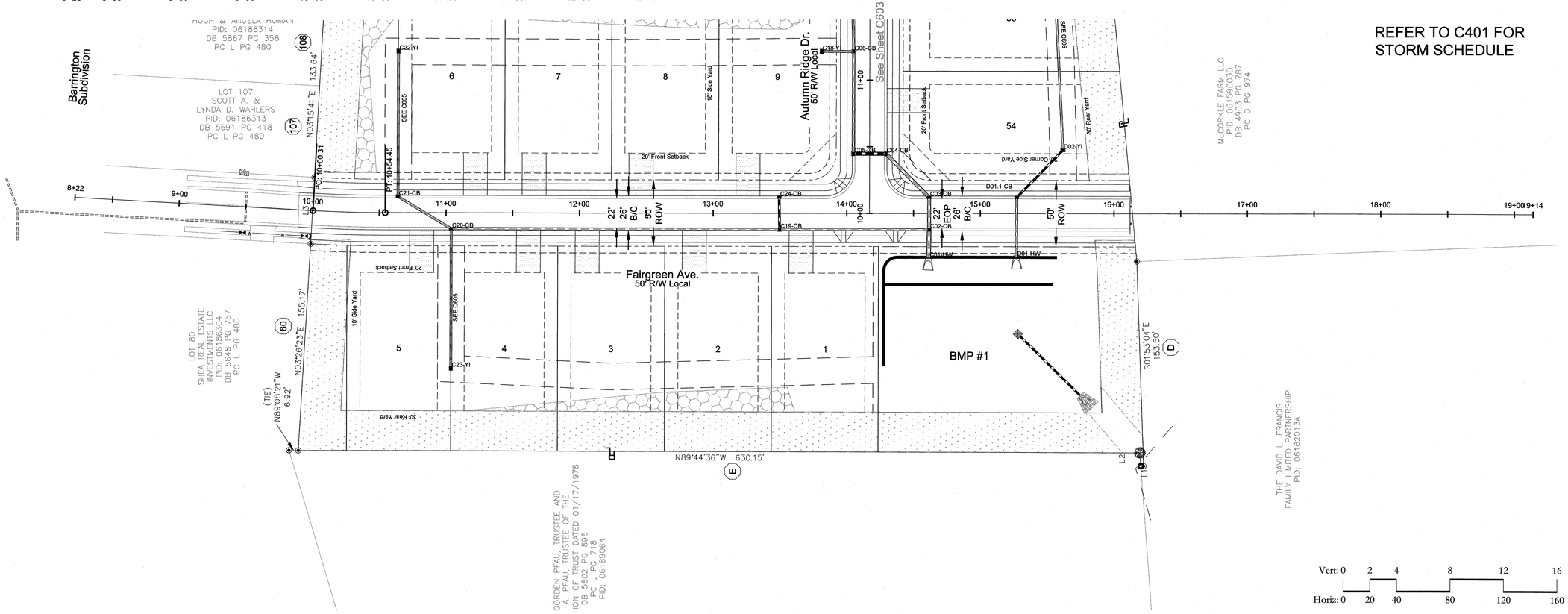

MERRICK & COMPANY
5001 MONHEAD SQUARE DRIVE, SUITE 530
CHARLOTTE, NC 28226
NC ENGINEERING FIRM F-0899 PHONE: 704.529.6500

THIS AND ANY OTHER ELECTRONIC MEDIA COUNTERPART IS AN INSTRUMENT OF SERVICE INSTRUMENT OF PROFESSIONAL SERVICE AND MUST NOT BE ALTERED IN ANY WAY. IT IS NOT INTENDED OR REPRESENTED TO BE SUITABLE FOR REUSE IN WHOLE OR IN PART, EXCEPT FOR THE PURPOSE FOR WHICH IT WAS PREPARED OR MADE AVAILABLE. ANY REUSE, OR MODIFICATION OF ANY UTILIZATION OF NOT A PROVEN, MOTHBALLED, OR A SUPERSEDED PROJECT WITHOUT WRITTEN AUTHORIZATION OF MERRICK & COMPANY IS AT THE RECIPIENT'S SOLE RISK AND WITHOUT LIABILITY OR LOSS EXPOSURE TO MERRICK AND COMPANY.

Shea Homes, LLC
8008 Corporate Center Dr.
Suite 300
Charlotte, NC 28226

REV	REVISION DESCRIPTION	DATE:	DRAWN BY:	CHECKED BY:	APPROVED BY:
1	InitiaI Agency Review	04.01.14	DP	CP	CP

REVISIONS:

		DATE:
DESIGN BY:	SKT	11/18/13
DRAWN BY:	KML	11/18/13
CHECKED BY:	MJK	01/29/14
APPROVED BY:	CP	01/29/14

Barrington 2
Waxhaw, Union County, NC

Roadway Profiles

NORTH CAROLINA PROFESSIONAL SEAL 032730 ENGINEER CLAUDIA I. PRADO
4/1/14

JOB NO: 65118007
DATE: 01/29/14
SHEET C601

\\merrick.com\CES\CHA\Projects\8007-00-Bell Property\Design\Cds\Civil\8007-C600-Profiles-R01.dwg

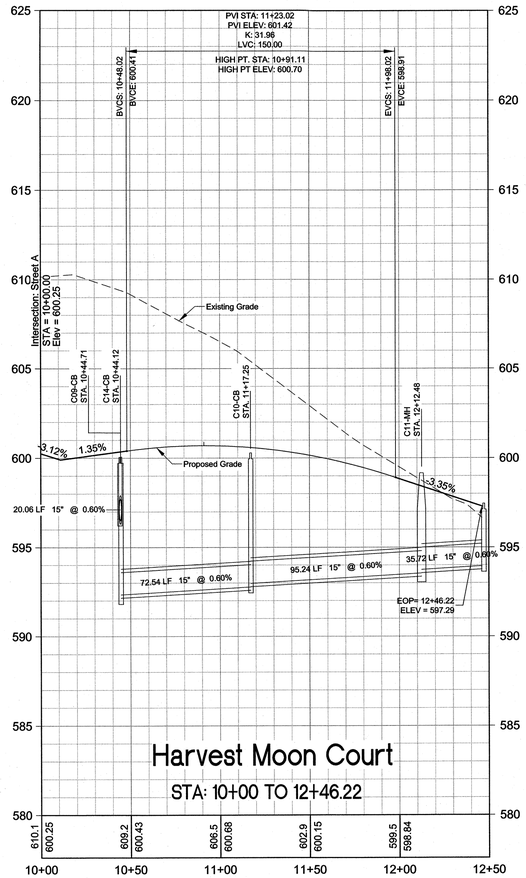

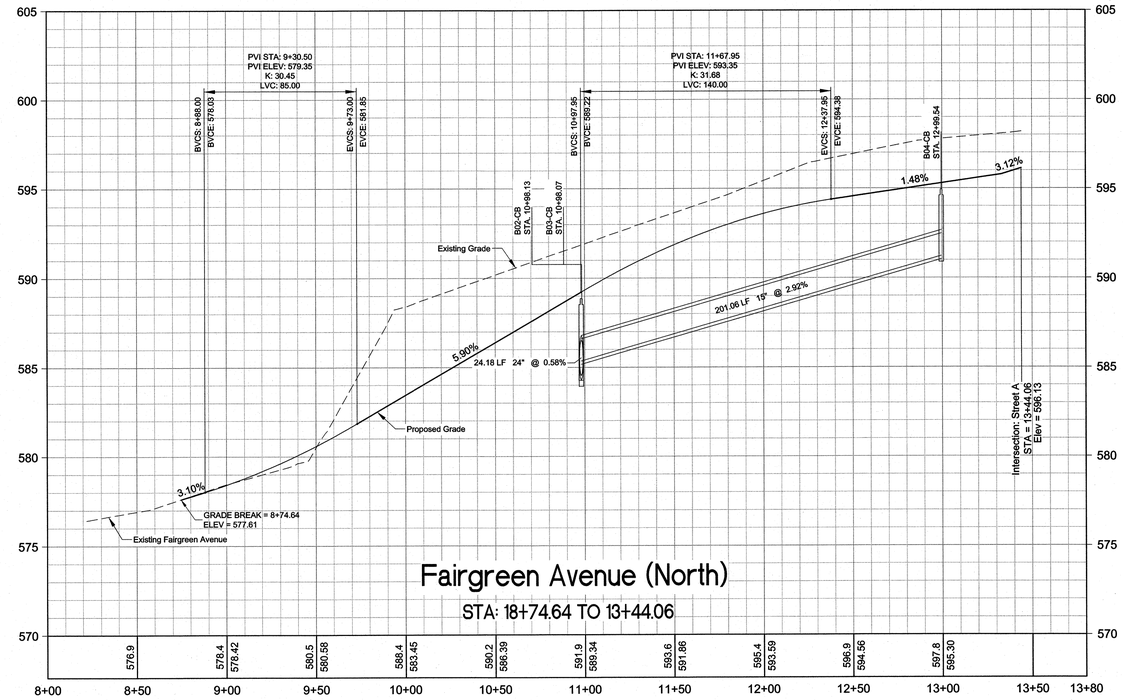

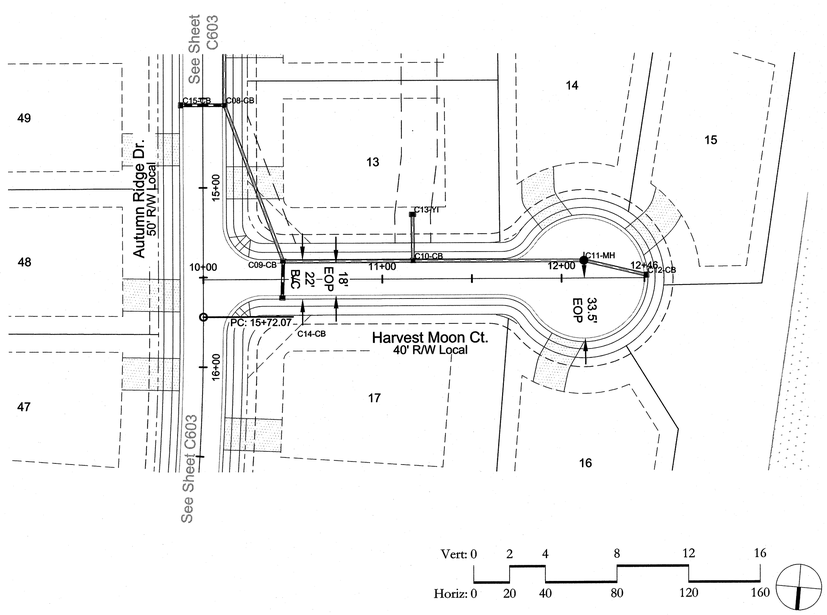

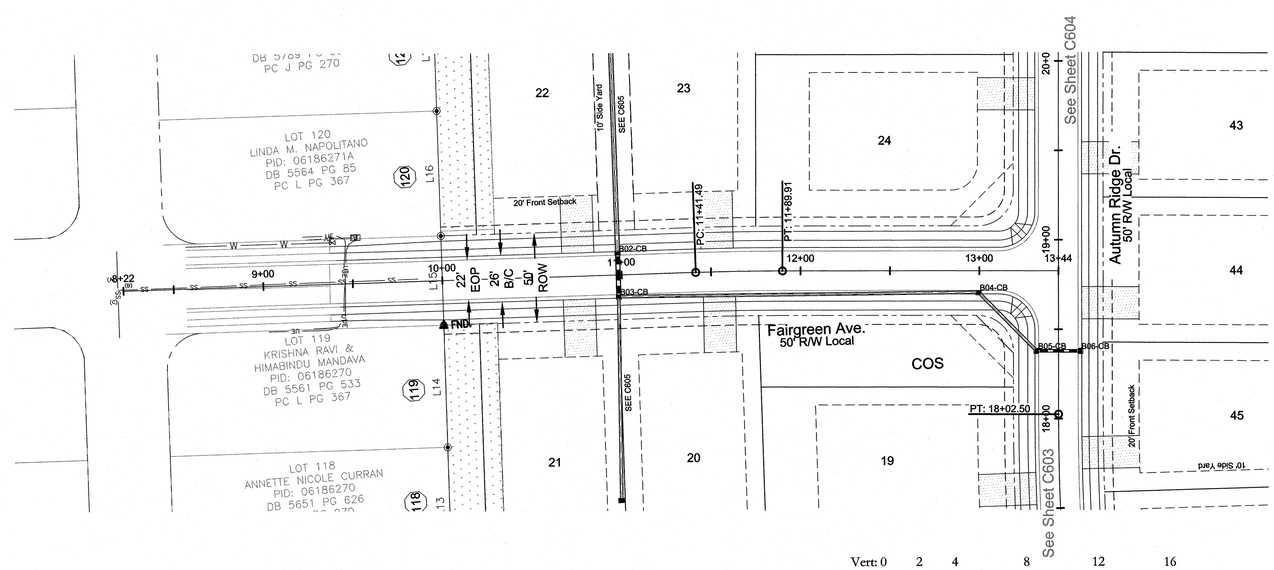

REFER TO C401 FOR STORM SCHEDULE

MERRICK & COMPANY
CHARLOTTE, NORTH CAROLINA
1001 MORHEAD SQUARE DRIVE, SUITE 530
NC ENGINEERING FIRM F-0908 PHONE: 704.529.6500

THIS AND ANY OTHER ELECTRONIC MEDIA COUNTERPART IS AN INSTRUMENT OF SERVICE OF MERRICK & COMPANY (MERRICK) AND MERRICK RETAINS OWNERSHIP. IT IS NOT INTENDED OR REPRESENTED TO BE SUITABLE FOR REUSE IN WHOLE OR IN PART, EXTENSION OR ADAPTATION BY ANY PERSON OTHER THAN MERRICK, NOR BY MERRICK FOR ANY PURPOSE OTHER THAN THE SPECIFIC PROJECT FOR WHICH IT WAS PREPARED. ANY REUSE, OR MODIFICATION, OR ANY UTILIZATION OF ANY PARTS NOT INTENDED OR REPRESENTED TO BE SUITABLE FOR REUSE BY MERRICK WITHOUT WRITTEN VERIFICATION OR ADAPTATION BY MERRICK FOR THE SPECIFIC PURPOSE INTENDED WILL BE AT THE USER'S SOLE RISK AND WITHOUT LIABILITY OR LOSS EXPOSURE TO MERRICK AND COMPANY.

Shea Homes, LLC
8008 Corporate Center Dr.
Suite 300
Charlotte, NC 28226

REVISIONS:

REV	REVISION DESCRIPTION	DATE:	DRAWN BY:	CHECKED BY:	APPROVED BY:
1	Initial Agency Review	03.10.14	CIP	CIP	CIP

		DATE:
DESIGN BY:	SRT	11/18/13
DRAWN BY:	KAM	11/18/13
CHECKED BY:	MJK	01/29/14
APPROVED BY:	CIP	01/29/14

Barrington 2
Waxhaw, Union County, NC

Roadway Profiles

SEAL 032730 ENGINEER CLAUDIA I. PRIGO
4.1.14

JOB NO: 65118007
DATE: 01/29/14
SHEET C602

Q:\CHA\Projects\8007-00-Bell Property\Design\CDs\Civil\8007-C600-Profiles-R01.dwg

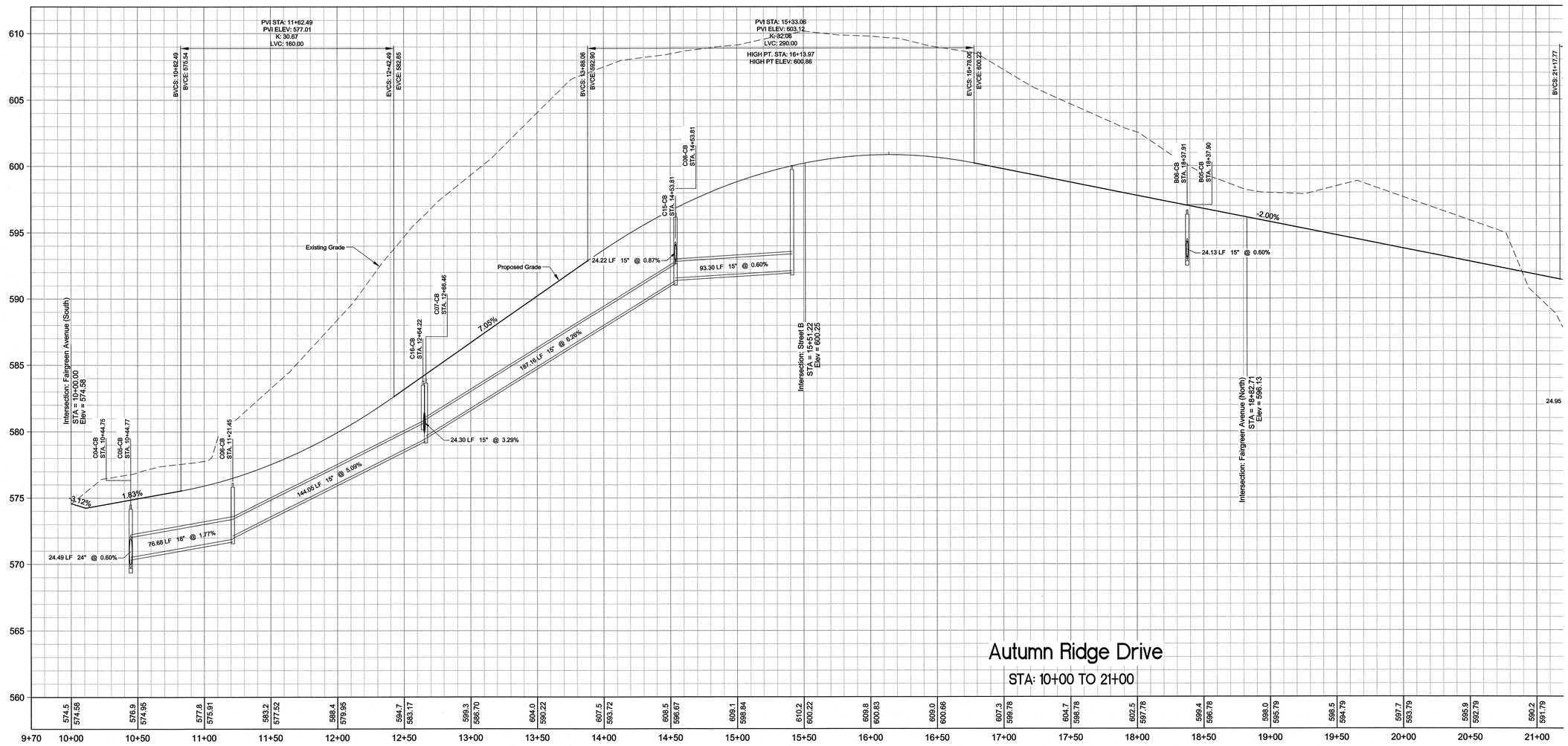

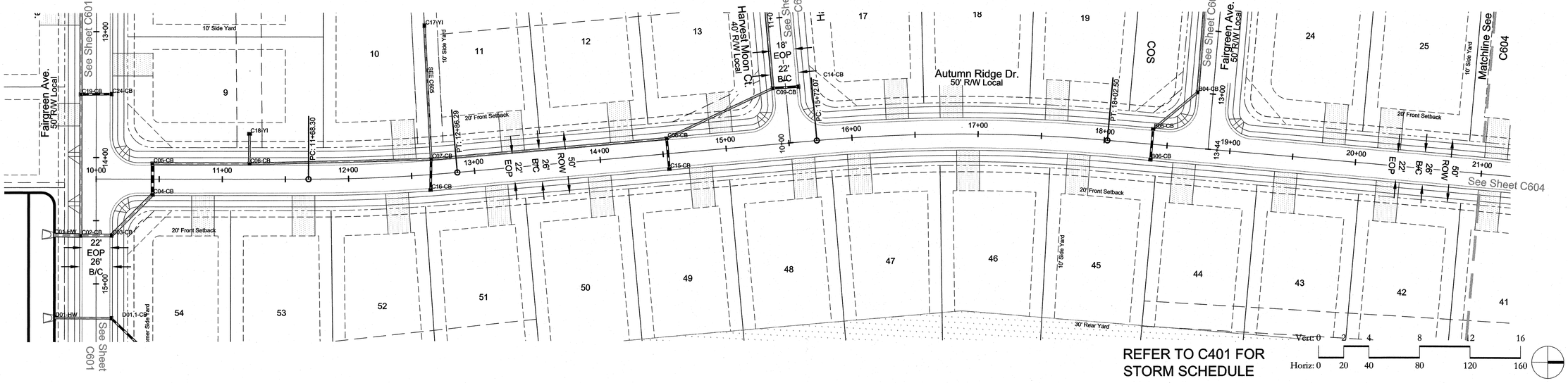

MERRICK & COMPANY
CIVIL ENGINEERS • SURVEYORS
10700 PROVIDENCE ROAD SUITE 530
CHARLOTTE, NC 28203
NC ENGINEERING FIRM F-0908 PHONE: 704.529.6500

© 2012 MERRICK & COMPANY
THIS DOCUMENT IS THE PROPERTY OF MERRICK AND COMPANY. IT IS PROVIDED AS A PROJECT PROGRESS DOCUMENT AND IS NOT TO BE USED FOR ANY OTHER PROJECT OR IN PART OR EXTENSION OF THIS PROJECT OR ON ANY OTHER PROJECT WITHOUT WRITTEN AUTHORIZATION BY MERRICK AND COMPANY. REPRODUCTION, IN WHOLE OR IN PART, WITHOUT THE PRIOR EXPRESS WRITTEN CONSENT OF MERRICK AND COMPANY, IS PROHIBITED. MERRICK AND COMPANY ASSUMES NO RESPONSIBILITY OR LIABILITY OR LOSS EXPOSURE TO MERRICK AND COMPANY.

Shea Homes, LLC
8008 Corporate Center Dr.
Suite 300
Charlotte, NC 28226

REVISIONS:						
REV	REVISION DESCRIPTION	DATE:	CHANGED BY:	CHECKED BY:	APPROVED BY:	
1	Initial Agency Review	03/10/14	CIP	CIP	CIP	

		DATE:
DESIGN BY:	SRT	11/18/13
DRAWN BY:	KML	11/18/13
CHECKED BY:	MJK	01/29/14
APPROVED BY:	CIP	01/29/14

Barrington 2
Waxhaw, Union County, NC

Roadway Profiles

SEAL 032730 NORTH CAROLINA PROFESSIONAL ENGINEER CLAUDIA I. PRADO
4/1/2

JOB NO: 65118007
DATE: 01/29/14
SHEET C603

Q:\CHA\Projects\8007-00-Bell Property\Design\CDs\Civil\8007-C600-Profiles-R01.dwg

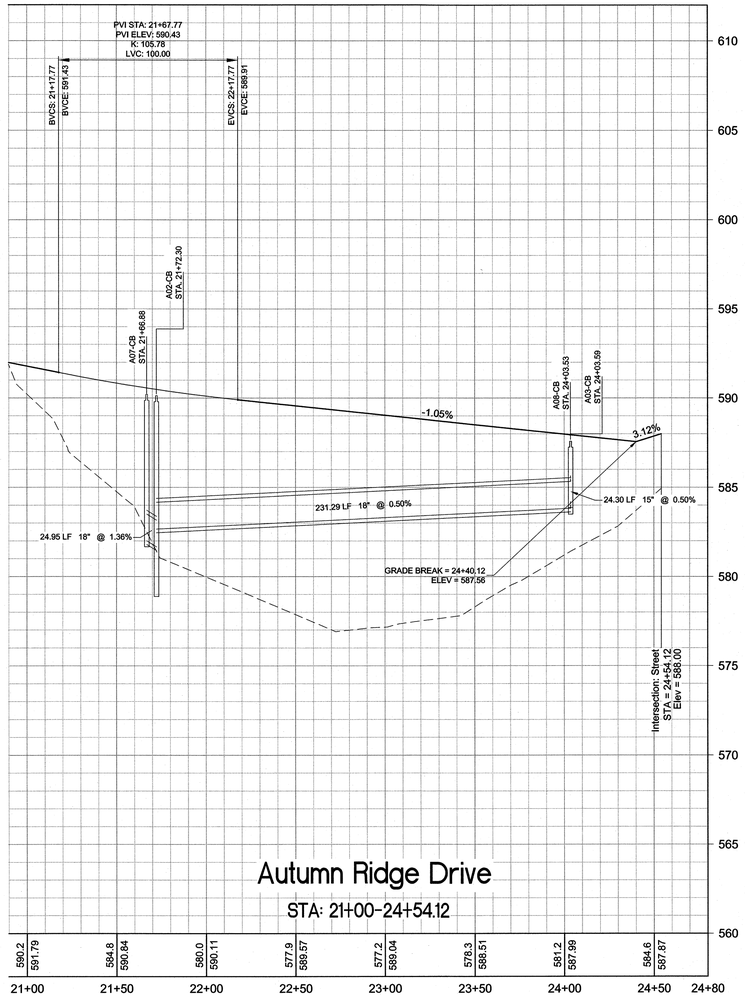

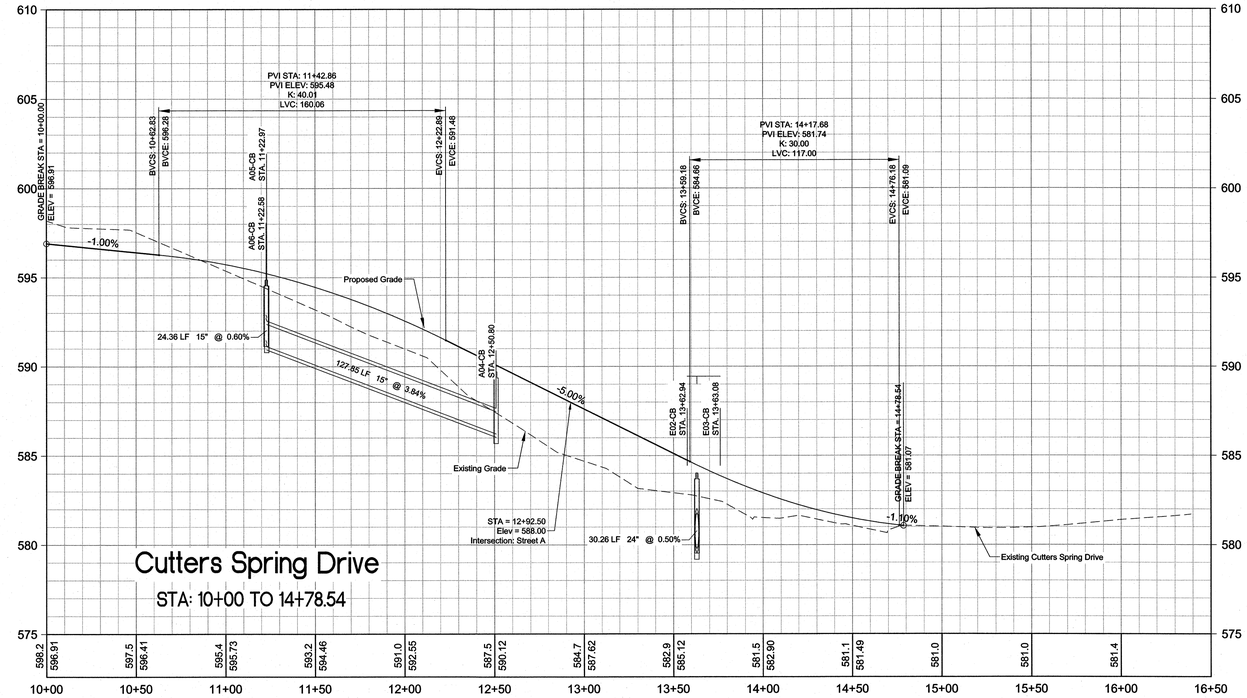

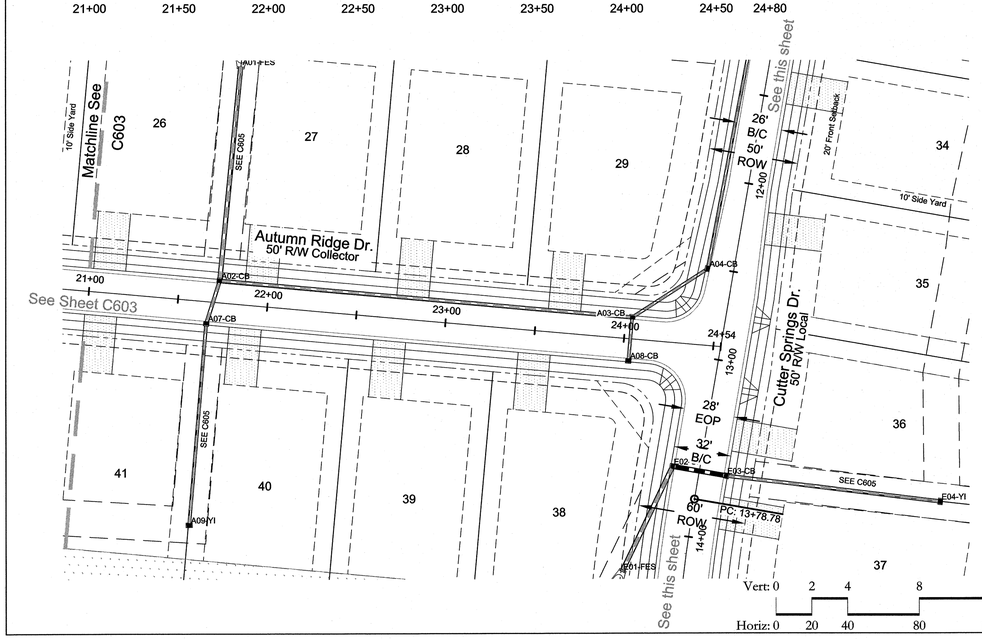

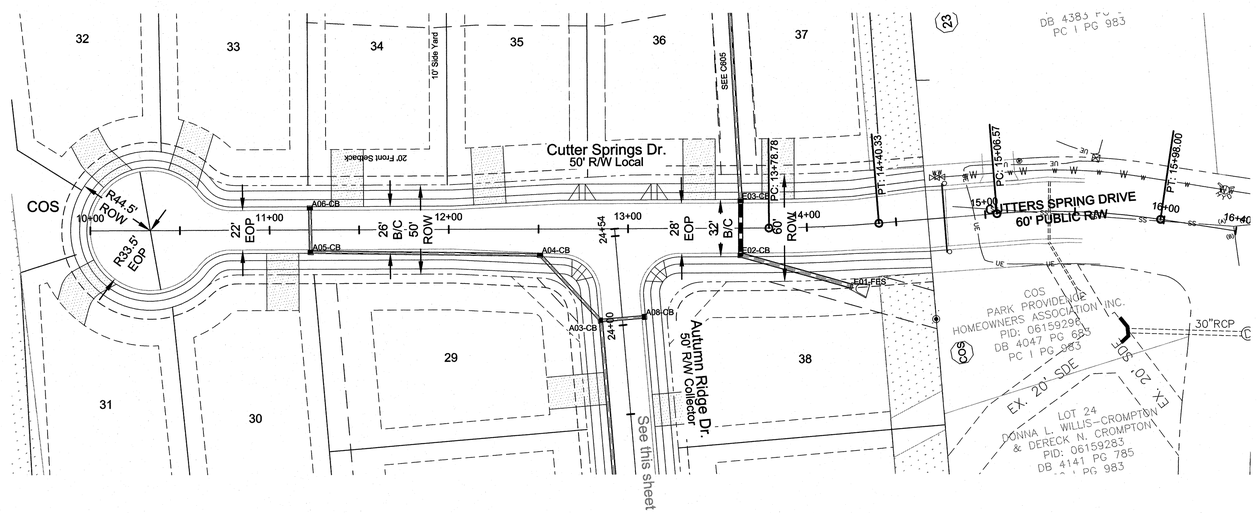

Q:\CHA\Projects\8007-00-Bell Property\Design\CDs\Civil\8007-C600-Profiles-R01.dwg

MERRICK & COMPANY
1001 NORTHEAST SQUARE DRIVE, SUITE 550
CHARLOTTE, NC 28205
NC ENGINEERING FIRM F-0908 PHONE: 704.529.6500

"THIS ARE ANY OTHER ELECTRONIC MEDIA COUNTERPART IS AN INSTRUMENT OF SERVICE OF MERRICK AND COMPANY. THE INFORMATION CONTAINED HEREIN IS PROPRIETARY AND CONFIDENTIAL. IT IS NOT TO BE DISCLOSED OR REPRODUCED, IN WHOLE OR IN PART, WITHOUT THE PRIOR EXPRESS WRITTEN CONSENT OF MERRICK AND COMPANY. ANY MODIFICATION OR ALTERATION TO THIS DOCUMENT WITHOUT WRITTEN CONSENT OF MERRICK AND COMPANY, MAKES IT A FALSE DOCUMENT AND ANY USE OF THE DOCUMENT MAY RESULT IN LIABILITY OR LOSS EXPOSURE TO MERRICK AND COMPANY."

Shea Homes, LLC
8008 Corporate Center Dr.
Suite 300
Charlotte, NC 28226

REVISIONS:

REV	REVISION DESCRIPTION	DATE:	DRAWN BY:	CHECKED BY:	APPROVED BY:
1	Initial Agency Review	02.10.14	CIP	CIP	CIP

		DATE:
DESIGN BY:	SRT	11/18/13
DRAWN BY:	KML	11/18/13
CHECKED BY:	MJK	01/29/14
APPROVED BY:	CIP	01/29/14

Barrington 2
Waxhaw, Union County, NC

Roadway Profiles

NORTH CAROLINA PROFESSIONAL ENGINEER SEAL 032730 CLAUDIA I. PRADO
4/1/14

JOB NO: 65118007
DATE: 01/29/14
SHEET C604

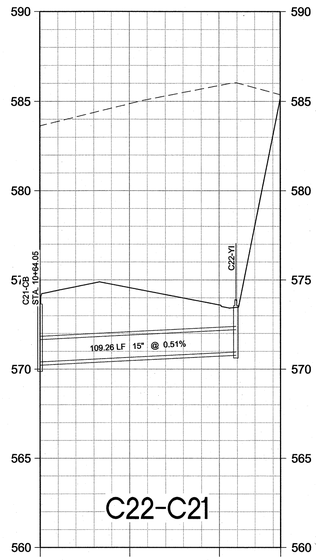

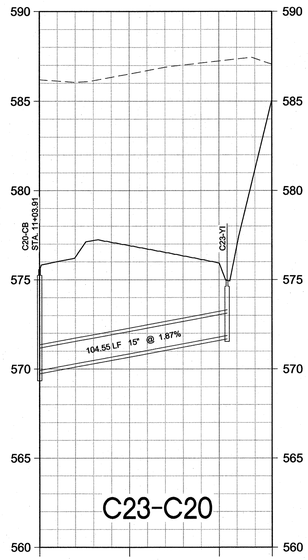

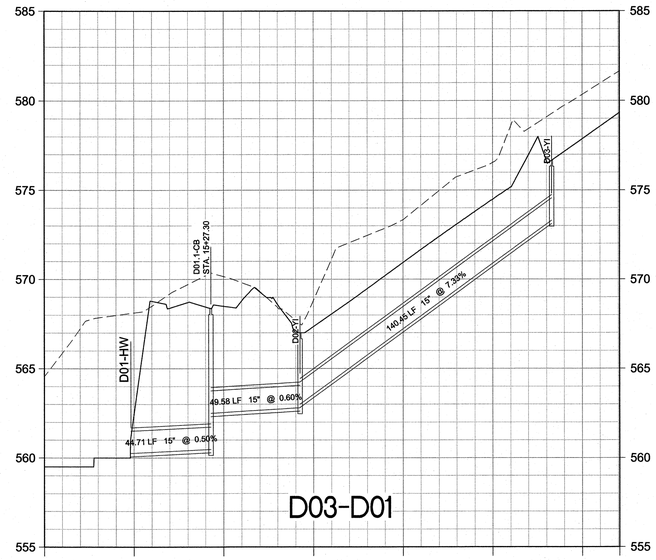

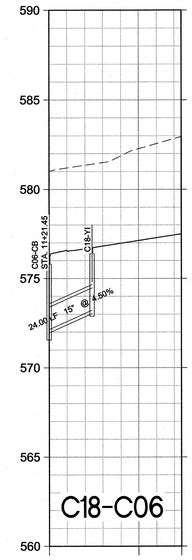

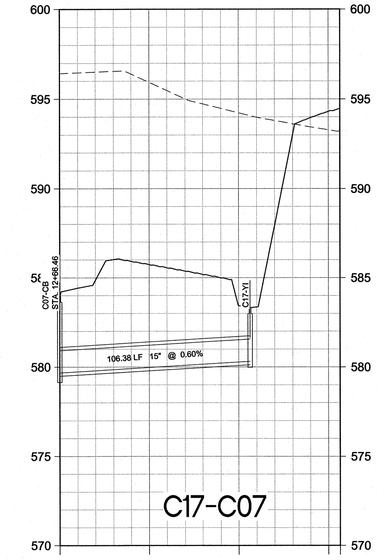

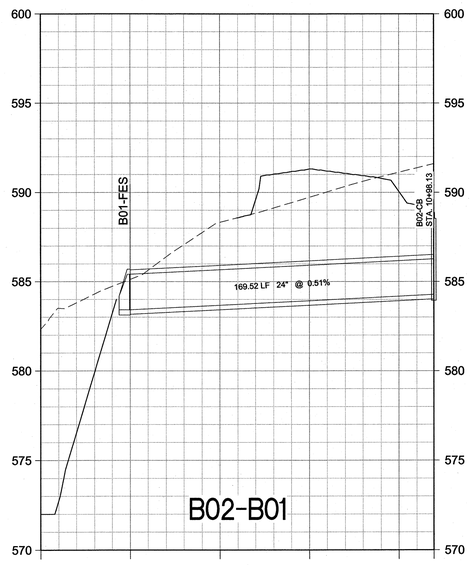

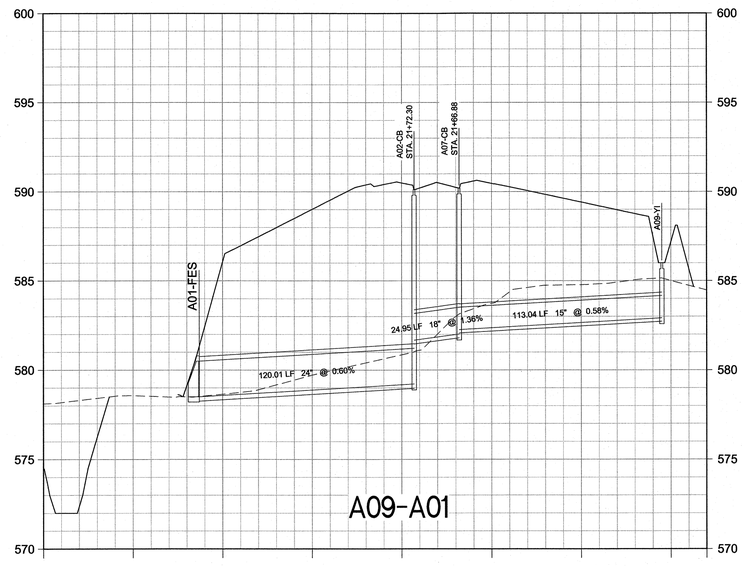

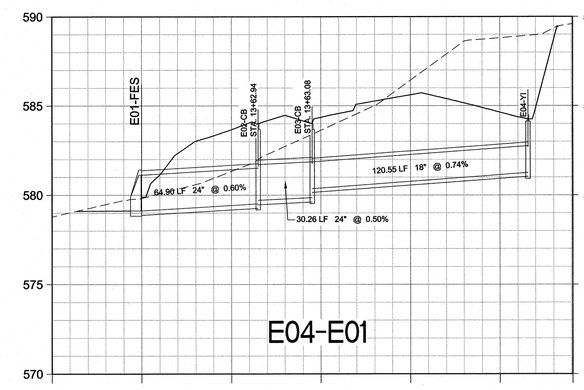

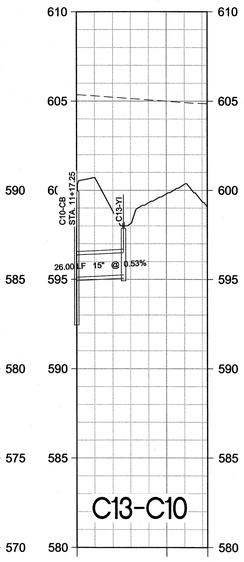

Vert: 0 2 4 8 12 16
Horiz: 0 20 40 80 120 160

Q:\CHA\Projects\8007-00-Bell Property\Design\CDs\Civil\8007-C600-Profiles-R01.dwg

MERRICK & COMPANY
5001 NORTHBROOK SQUARE DRIVE, SUITE 550
CHARLOTTE, NC 28269
NC ENGINEERING FIRM F-0908 PHONE: 704.529.6500

THE ARC ART STYLES EXTERNAL WORK COMPRISED IN THIS INSTRUMENT, WHETHER PLANS, SPECIFICATIONS, STUDIES OR OTHER DOCUMENTS, IS AND SHALL REMAIN THE PROPERTY OF MERRICK AND COMPANY, OR IS TO BE RETURNED UPON REQUEST. THE PROJECT OR ON ANY OTHER PROJECT. SUCH INSTRUMENTS SHALL NOT BE REPRODUCED, PUBLISHED OR USED IN WHOLE OR IN PART, WITHOUT THE PRIOR EXPRESS WRITTEN CONSENT OF MERRICK AND COMPANY. THE REUSE OF THESE DOCUMENTS BY OTHERS WITHOUT WRITTEN CONSENT OF MERRICK AND COMPANY, WITHOUT IS AT THEIR SOLE RISK AND WITHOUT LIABILITY OR LOSS EXPOSURE TO MERRICK AND COMPANY.

Shea Homes, LLC
8008 Corporate Center Dr.
Suite 300
Charlotte, NC 28226

REVISIONS:

REV	REVISION DESCRIPTION	DATE:	CHANGED BY:	CHECKED BY:	APPROVED BY:
1	Initial Agency Review	03.10.14	CIP	CIP	CIP

		DATE:
DESIGN BY:	SRT	11/18/13
DRAWN BY:	KML	11/18/13
CHECKED BY:	MJK	01/29/14
APPROVED BY:	CIP	01/29/14

Barrington 2
Waxhaw, Union County, NC

Roadway Profiles

NORTH CAROLINA PROFESSIONAL SEAL 032730 ENGINEER CLAUDIA I. PRADO
3/1/14

JOB NO.: 65118007
DATE: 01/29/14
SHEET C605

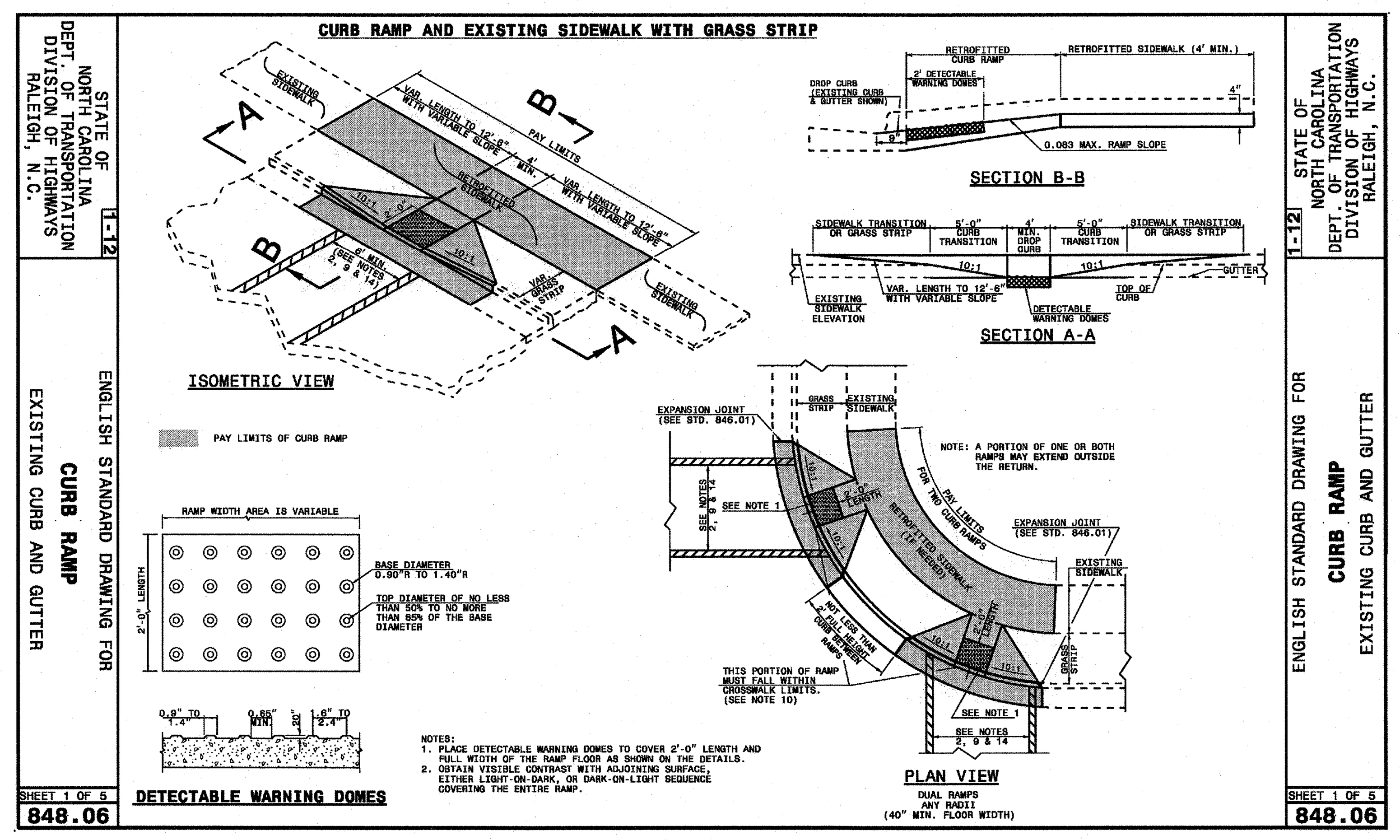

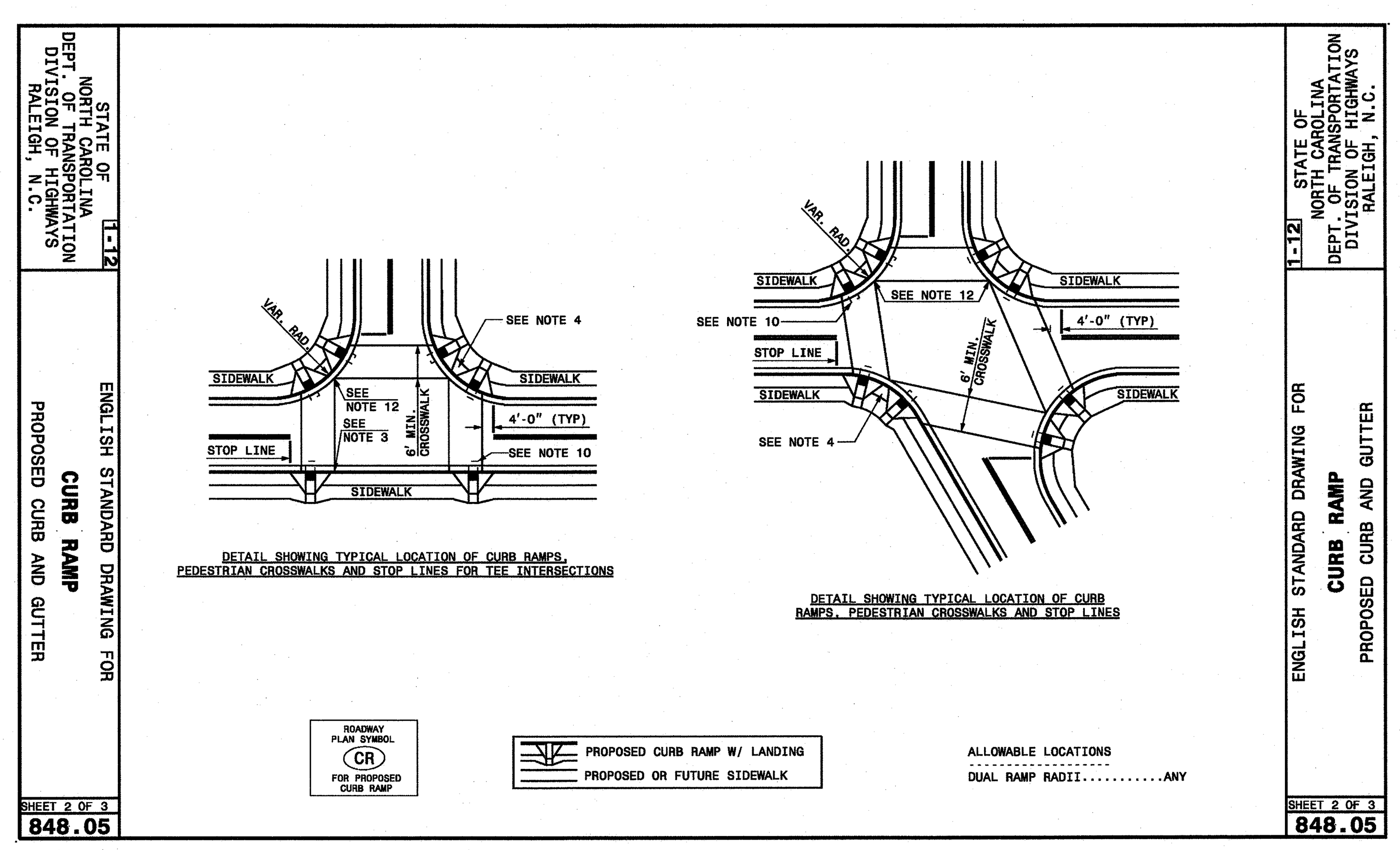

STATE OF NORTH CAROLINA DEPT. OF TRANSPORTATION DIVISION OF HIGHWAYS RALEIGH, N.C. — 1-12

ENGLISH STANDARD DRAWING FOR **CURB RAMPS** NOTES

NOTES:

1. CONSTRUCT THE RAMP SURFACE TO BE STABLE, FIRM, AND SLIP RESISTANT. CONSTRUCT THE CURB RAMP TYPE AS SHOWN IN THE PAVEMENT MARKING PLANS OR AS DIRECTED BY THE ENGINEER.
2. LOCATE CURB RAMPS AND PLACE PEDESTRIAN CROSSWALK MARKINGS AS SHOWN IN THE PAVEMENT MARKING PLANS. WHEN FIELD ADJUSTMENTS REQUIRE MOVING CURB RAMPS OR MARKINGS AS SHOWN, CONTACT THE SIGNING AND DELINEATION UNIT OR LOCATE AS DIRECTED BY THE ENGINEER.
3. COORDINATE THE CURB RAMP AND THE PEDESTRIAN CROSSWALK MARKINGS SO A 4'x4' CLEAR SPACE AT THE BASE OF THE CURB RAMP WILL FALL WITHIN THE PEDESTRIAN CROSSWALK LINES.
4. SET BACK DISTANCE FROM INSIDE CROSSWALK MARKING TO NEAREST EDGE OF TRAVEL LANE IS 4' MINIMUM.
5. REFER TO THE PAVEMENT MARKING PLANS FOR STOP BAR LOCATIONS AT SIGNALIZED INTERSECTIONS. IF A PAVEMENT MARKING PLAN IS NOT PROVIDED, CONTACT THE SIGNAL DESIGN SECTION FOR THE STOP BAR LOCATIONS OR LOCATE AS DIRECTED BY THE ENGINEER.
6. TERMINATE PARKING A MINIMUM OF 20' BACK OF A PEDESTRIAN CROSSWALK.
7. CONSTRUCT CURB RAMPS A MINIMUM OF 4' WIDE.
8. CONSTRUCT THE RUNNING SLOPE OF THE RAMP 8.33% MAXIMUM.
9. ALLOWABLE CROSS SLOPE ON SIDEWALKS AND CURB RAMPS WILL BE 2% MAXIMUM.
10. CONSTRUCT THE SIDE FLARE SLOPE A MAXIMUM OF 10% MEASURED ALONG THE CURB LINE.
11. CONSTRUCT THE COUNTER SLOPE OF THE GUTTER OR STREET AT THE BASE OF THE CURB RAMP A MAXIMUM OF 5% AND MAINTAIN A SMOOTH TRANSITION.
12. CONSTRUCT LANDINGS FOR SIDEWALK A MINIMUM OF 4'x4' WITH A MAXIMUM SLOPE OF 2% IN ANY DIRECTION. CONSTRUCT LANDINGS FOR MEDIAN ISLANDS A MINIMUM OF 5'x5' WITH A MAXIMUM SLOPE OF 2% IN ANY DIRECTION.
13. TO USE A MEDIAN ISLAND AS A PEDESTRIAN REFUGE AREA, MEDIAN ISLANDS WILL BE A MINIMUM OF 6' WIDE. CONSTRUCT MEDIAN ISLANDS TO PROVIDE PASSAGE OVER OR THROUGHT THE ISLAND.
14. SMALL CHANNELIZATION ISLANDS THAT CAN NOT PROVIDE A 5'X5' LANDING AT THE TOP OF A RAMPS, WILL BE CUT THROUGH LEVEL WITH THE SURFACE STREET.
15. CURB RAMPS WITH RETURNED CURBS MAY BE USED ONLY WHERE PEDESTRIANS WOULD NOT NORMALLY WALK ACROSS THE RAMP. THE ADJACENT SURFACE IS PLANTING OR OTHER NON-WALKING SURFACE OR THE SIDE APPROACH IS SUBSTANTIALLY OBSTRUCTED.
16. PLACE A ½" EXPANSION JOINT WHERE THE CONCRETE CURB RAMP JOINS THE CURB AS SHOWN IN ROADWAY STANDARD DRAWING 848.01
17. PLACE ALL PEDESTRIAN PUSH BUTTON ACTUATORS AND CROSSING SIGNALS AS SHOWN IN THE PLANS OR AS SHOWN IN THE MUTCD.
18. CURB RAMPS THROUGH MEDIAN ISLANDS, SINGLE RAMPS AT DUAL CROSSWALKS OR LIMITED R/W SITUATIONS, WILL BE HANDLED BY SPECIAL DETAILS. CONTACT THE CONTRACT STANDARDS AND DEVELOPMENT UNIT FOR THE DETAILS OR FOR A SPECIAL DESIGN.

SHEET 3 OF 3 — 848.05

NCDOT ACCESSIBLE RAMP DETAILS

Scale: NTS — 1/801

NOTES:

1. CURB AND GUTTER STREETS MAY USE VALLEY GUTTER OR STANDARD CURB AND GUTTER.
2. ALTERNATIVE CUL-DE-SAC DESIGNS, INCLUDING ISLANDS SHALL BE SUBMITTED TO TOWN ENGINEERING & PROPERTY MANAGEMENT AND NCDOT FOR REVIEW AND APPROVAL.
3. THE CROWN FOR PAVEMENT SHALL BE 1/4" PER FT FROM THE CENTER OF THE CUL-DE-SAC.
4. MAXIMUM CUL-DE-SAC LENGTH IS 1000'.
5. STREETS ACCESSING FEWER THAN TEN (10) LOTS OR LESS THAN 250 FEET IN LENGTH WILL ONLY BE REQUIRED TO HAVE SIDEWALK ON ONE SIDE OF THE STREET AND NOT ALONG THE CUL-DE-SAC "BULB".

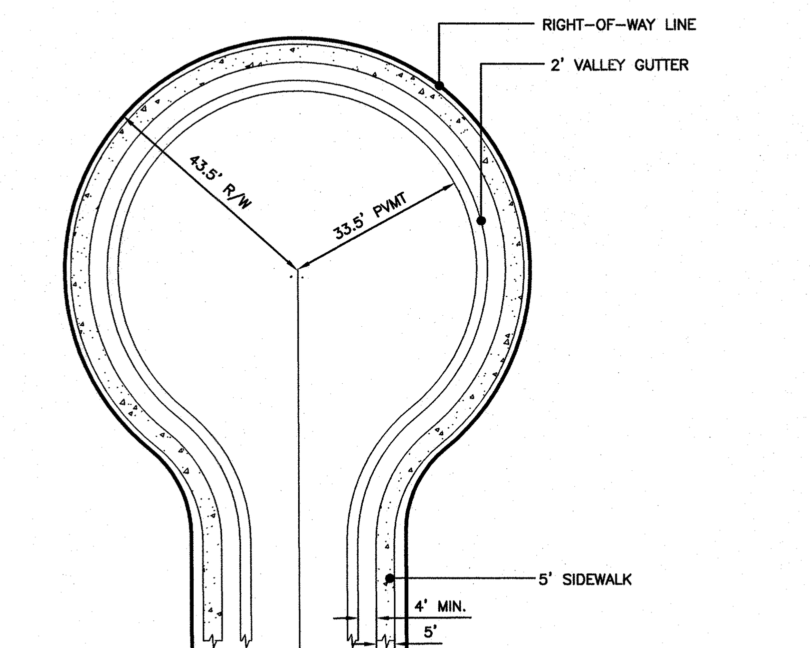

RESIDENTIAL CUL-DE-SAC DETAIL

Scale: NTS — 8/800

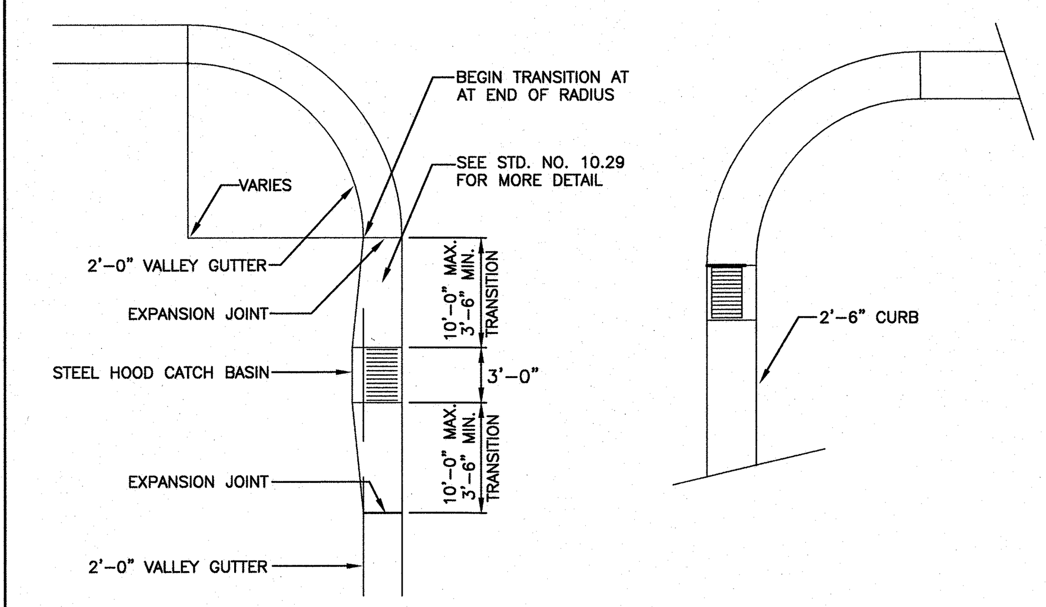

NOTES:

1. WHERE 2'-6" CURB AND GUTTER IS USED, CATCH BASINS MAY BE LOCATED AT END OF RADIUS.
2. RADIUS AT INTERSECTION MAY VARY.

CATCH BASIN PLACEMENT AT INTERSECTIONS

Scale: NTS — CLD STD. 10.30 — 6/800

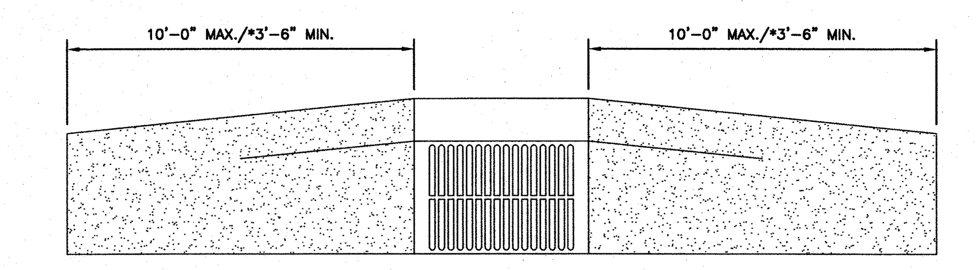

PLAN

NOTE:
* TRANSITION FROM 2'-6" STANDARD CURB AN GUTTER TO VALLEY CURB AT A DRAINAGE INLET ONLY.

SEE CHARLOTTE LAND DEVELOPMENT STANDARD DETAIL 10.19 FOR CROSS SECTION GEOMETRY.

CATCH BASIN FRAME IN VALLEY GUTTER

Scale: NTS — CLD STD. 10.29 — 3/800

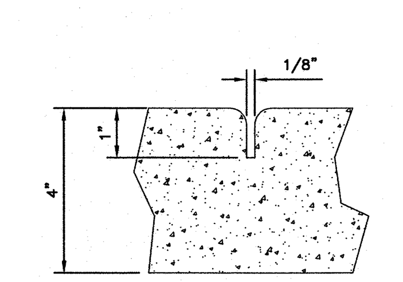

GROOVE JOINT IN SIDEWALK

GENERAL NOTES:

1. A GROOVE JOINT 1" DEEP WITH 1/8" RADII SHALL BE REQUIRED IN THE CONCRETE SIDEWALK AT 5' INTERVALS. ONE 1/2" EXPANSION JOINT WILL BE REQUIRED AT 45' INTERVALS NOT TO EXCEED 50' AND MATCHING EXPANSION/CONSTRUCTION JOINT IN ADJACENT CURB. A SEALED 1/2" EXPANSION JOINT WILL BE REQUIRED WHERE THE SIDEWALK JOINS ANY RIGID STRUCTURE.
2. SIDEWALK AT DRIVEWAY ENTRANCES TO BE 6" THICK.
3. WIDTH OF SIDEWALK ON THOROUGHFARE STREETS SHALL BE A MINIMUM OF 5'. WIDTH OF SIDEWALKS IN THE CENTRAL BUSINESS DISTRICT WILL BE DETERMINED BY BY CDOT.
4. WIDTH OF SIDEWALKS ON NON-THOROUGHFARE STREETS SHALL BE A MINIMUM OF 4'.
5. SIDEWALK TO BE POURED TO END OF RADIUS AT INTERSECTING STREETS.
6. CONCRETE COMPRESSIVE STRENGTH SHALL BE 3600 PSI. IN 28 DAYS.
7. ZONING CONDITIONS MAY REQUIRE ADDITIONAL WIDTH SIDEWALKS WHICH SHALL SUPERSEDE THESE STANDARD DIMENSIONS SHOWN.

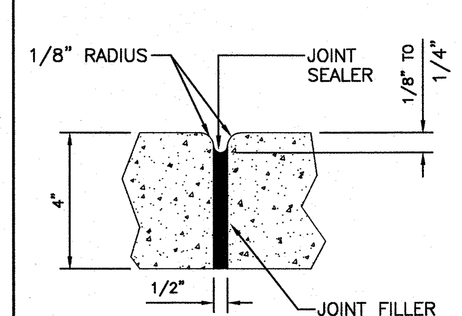

TRANSVERSE EXPANSION JOINT IN SIDEWALK

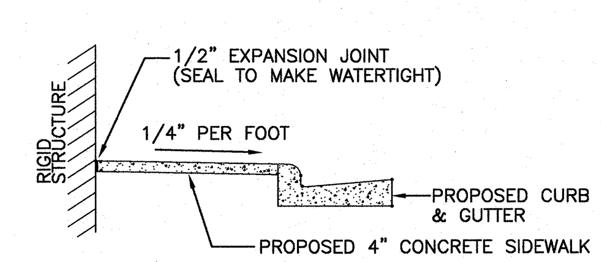

DETAILS SHOWING EXPANSION JOINTS IN CONCRETE SIDEWALK

CONCRETE SIDEWALKS

Scale: NTS — CLD STD. 10.22 — 4/800

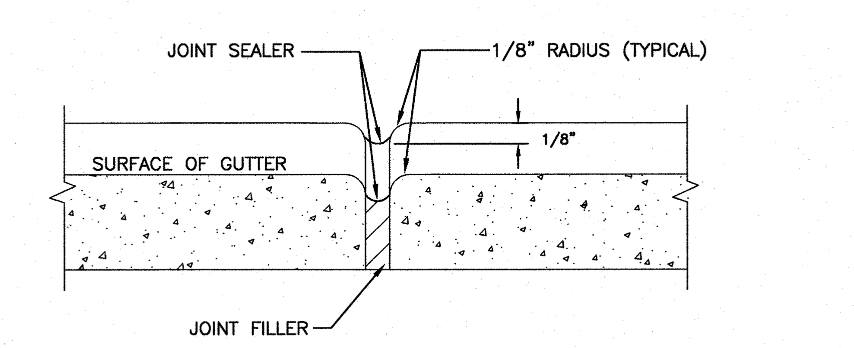

TRANSVERSE EXPANSION JOINT

NOTES:

1. CONTRACTION JOINTS SHALL BE SPACED AT 10-FOOT INTERVALS. FOR VALLEY GUTTER, A 15-FOOT SPACING MAY BE USED WHEN A MACHINE IS USED. JOINT SPACING MAY BE ALTERED BY THE ENGINEER TO PREVENT UNCONTROLLED CRACKING.
2. CONTRACTION JOINTS MAY BE INSTALLED BY THE USE OF TEMPLATES OR FORMED BY OTHER APPROVED METHODS. WHERE SUCH JOINTS ARE NOT FORMED BY TEMPLATES, A MINIMUM DEPTH OF 1 1/2" SHALL BE OBTAINED.
3. ALL EXPANSION JOINTS SHALL BE SPACED AT 90-FOOT INTERVALS, AND ADJACENT TO ALL RIGID OBJECTS. JOINTS SHALL MATCH LOCATIONS WITH JOINTS IN ABUTTING SIDEWALK.
4. CONCRETE COMPRESSIVE STRENGTH SHALL BE 3600 P.S.I. IN 28 DAYS.
5. CURB SHALL BE DEPRESSED AT INTERSECTIONS TO PROVIDE FOR FUTURE ACCESSIBLE RAMPS.
6. TOP 6" OF SUBGRADE BENEATH THE CURB AND GUTTER SHALL BE COMPACTED TO 100 STANDARD PROCTOR DENSITY.

CURB AND GUTTER

Scale: NTS — CLD STD. 10.17C — 3/800

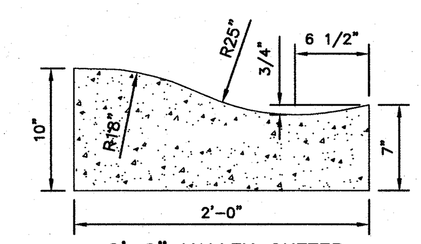

2'-0" VALLEY GUTTER

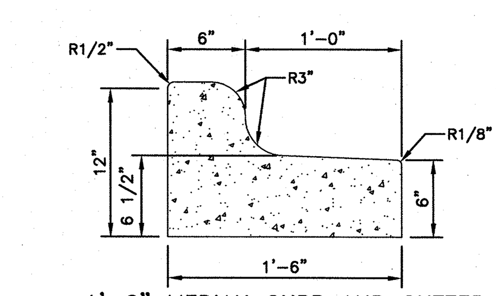

1'-6" MEDIAN CURB AND GUTTER
TO BE USED IN MEDIANS WHEN LANES ARE SLOPED FROM ISLAND OR AS SPECIFIED BY THE APPROPRIATE CITY/COUNTY ENGINEERING DEPT.

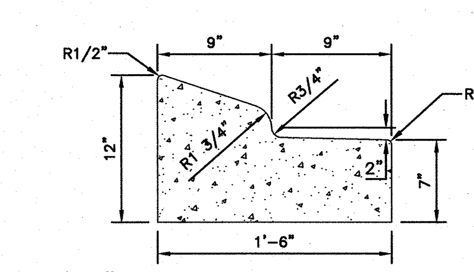

1'-6" MOUNTABLE CURB AND GUTTER
TO BE USED IN MEDIANS ONLY: WHEN SPECIFIED BY THE APPROPRIATE CITY/COUNTY ENGINEERING DEPT.

STANDARD CURB AND GUTTER

Scale: NTS — CLD STD. 10.17B — 2/800

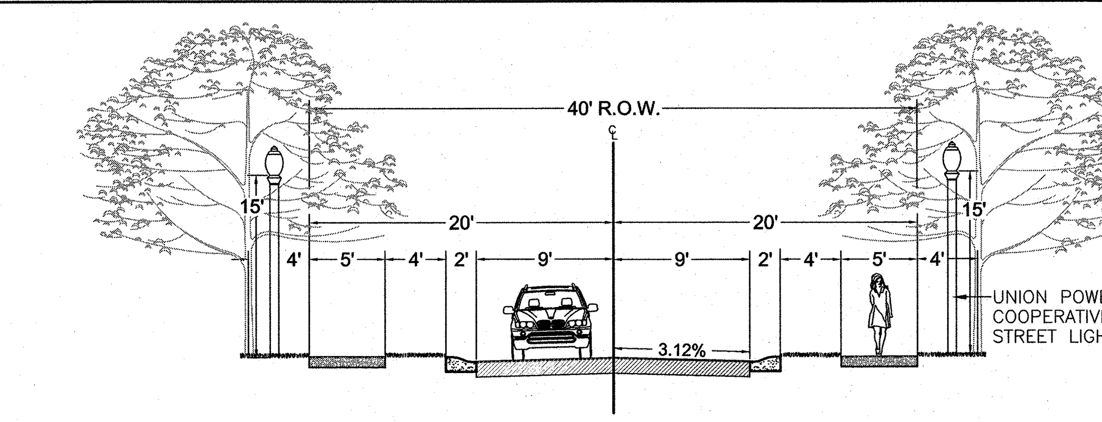

40' R.O.W. Cross Section

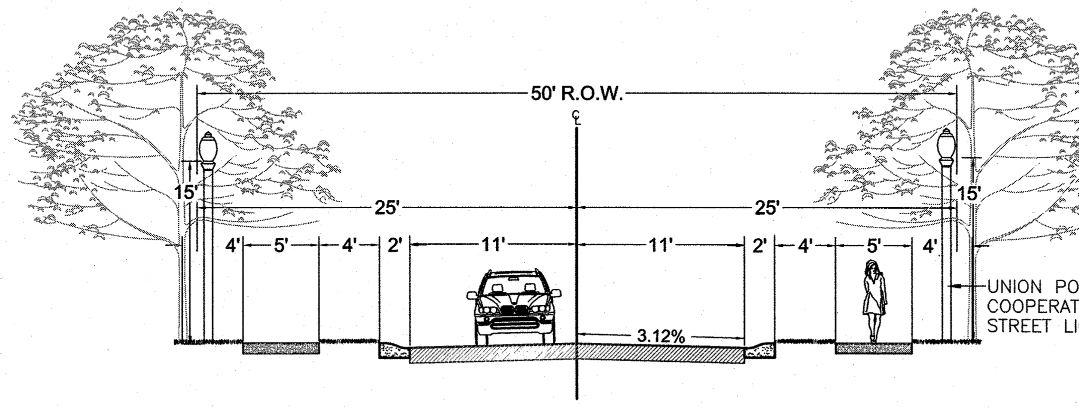

50' R.O.W. Cross Section

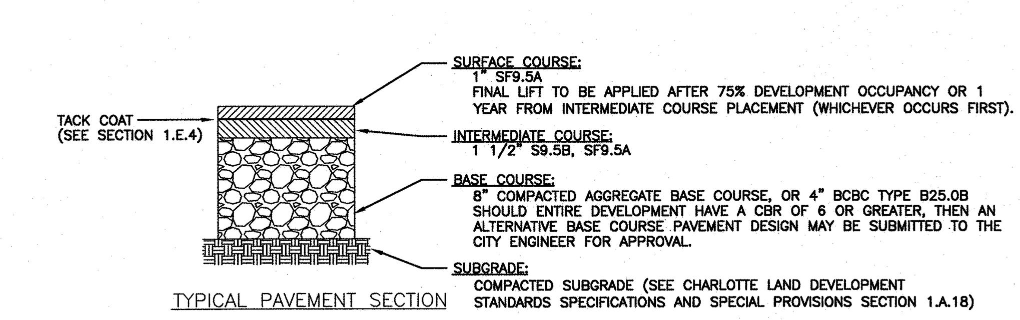

TYPICAL PAVEMENT SECTION

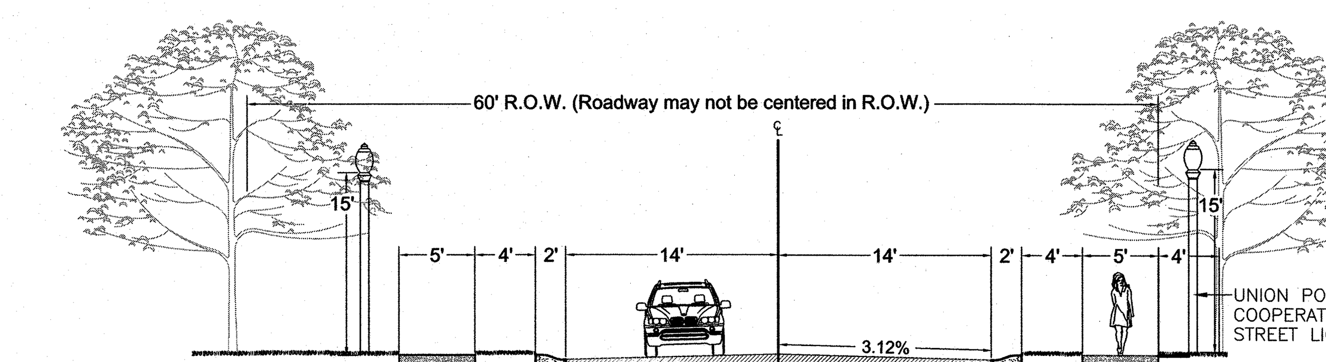

60' R.O.W. Cross Section

TYPICAL ROADWAY SECTIONS

Scale: NTS — 1/800

MERRICK® & COMPANY
1001 MOREHEAD SQUARE DRIVE, SUITE 530
CHARLOTTE, NC 28203
NC ENGINEERING FIRM F-0908 PHONE: 704.529.6500

THIS AND ANY OTHER ELECTRONIC MEDIA COUNTERPART IS AN INSTRUMENT OF SERVICE PREPARED BY MERRICK AND COMPANY FOR A DEFINED PROJECT. IT IS NOT INTENDED OR REPRESENTED TO BE SUITABLE FOR REUSE IN WHOLE OR IN PART ON EXTENSIONS OF THE PROJECT OR ON ANY OTHER PROJECT. REUSE OR MODIFICATION, OF ANY UTILIZATION IF NOT A FINISHED INSTRUMENT, WITHOUT THE PRIOR EXPRESS WRITTEN CONSENT OF MERRICK AND COMPANY SHALL BE AT THE SOLE RISK FOR THE UNAUTHORIZED USER WITHOUT LIABILITY OR LOSS EXPOSURE TO MERRICK AND COMPANY.

Shea Homes, LLC
8008 Corporate Center Dr.
Suite 300
Charlotte, NC 28226

REVISIONS:

REV	REVISION DESCRIPTION	DATE:	CHANGED BY:	CHECKED BY:	APPROVED BY:
1	Initial Agency Review	03.10.14	CIP	CIP	CIP

		DATE:
DESIGN BY:	SRT	11/18/13
DRAWN BY:	KML	11/18/13
CHECKED BY:	MJK	01/29/14
APPROVED BY:	CIP	01/29/14

Barrington 2
Waxhaw, Union County, NC
Civil Site Details

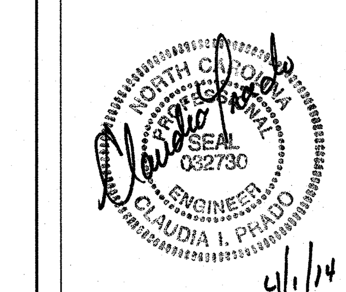

JOB NO: 65118007
DATE: 01/29/14
SHEET C800

Q:\CHA\Projects\8007-00-Bell Property\Design\CDs\Civil\8007-C800-Details-R01.dwg

Q:\CHA\Projects\8007-00-Bell Property\Design\CDs\Civil\8007-C800-Details-R01.dwg

STATE OF NORTH CAROLINA DEPT. OF TRANSPORTATION DIVISION OF HIGHWAYS RALEIGH, N.C. 1-02

ENGLISH STANDARD DRAWING FOR **FRAME, GRATES, AND HOOD** FOR USE ON STANDARD CATCH BASIN

SHEET 1 OF 2 **840.03**

NOTE: USE TYPE "E", "F" AND "G" GRATE UNLESS OTHERWISE NOTED.

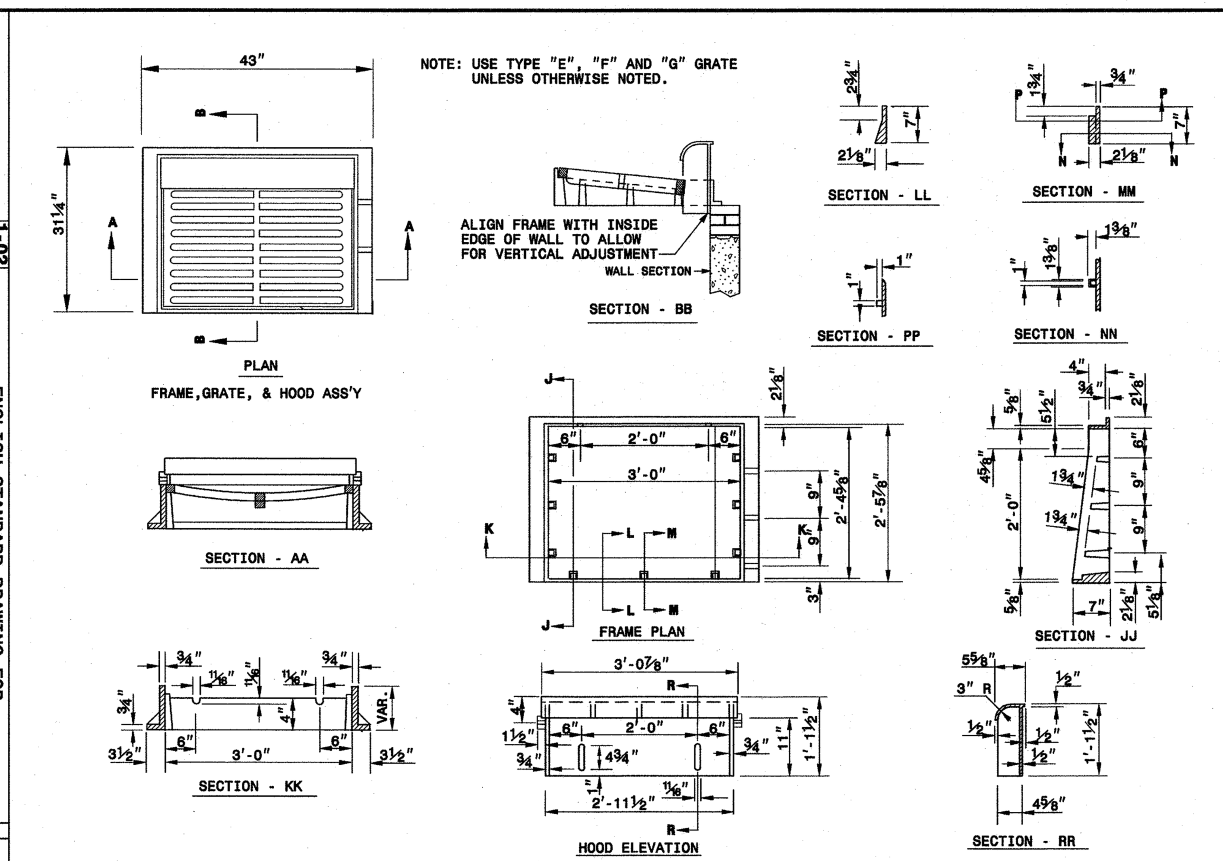

STATE OF NORTH CAROLINA DEPT. OF TRANSPORTATION DIVISION OF HIGHWAYS RALEIGH, N.C. 1-02 ENGLISH STANDARD DRAWING FOR FRAME, GRATES, AND HOOD FOR USE ON STANDARD CATCH BASIN SHEET 1 OF 2 840.03

STATE OF NORTH CAROLINA DEPT. OF TRANSPORTATION DIVISION OF HIGHWAYS RALEIGH, N.C. 1-02

ENGLISH STANDARD DRAWING FOR **BRICK CATCH BASIN WITH SINGLE AND MULTIPLE PIPES** 12" THRU 48" PIPE

SHEET 2 OF 2 **840.05**

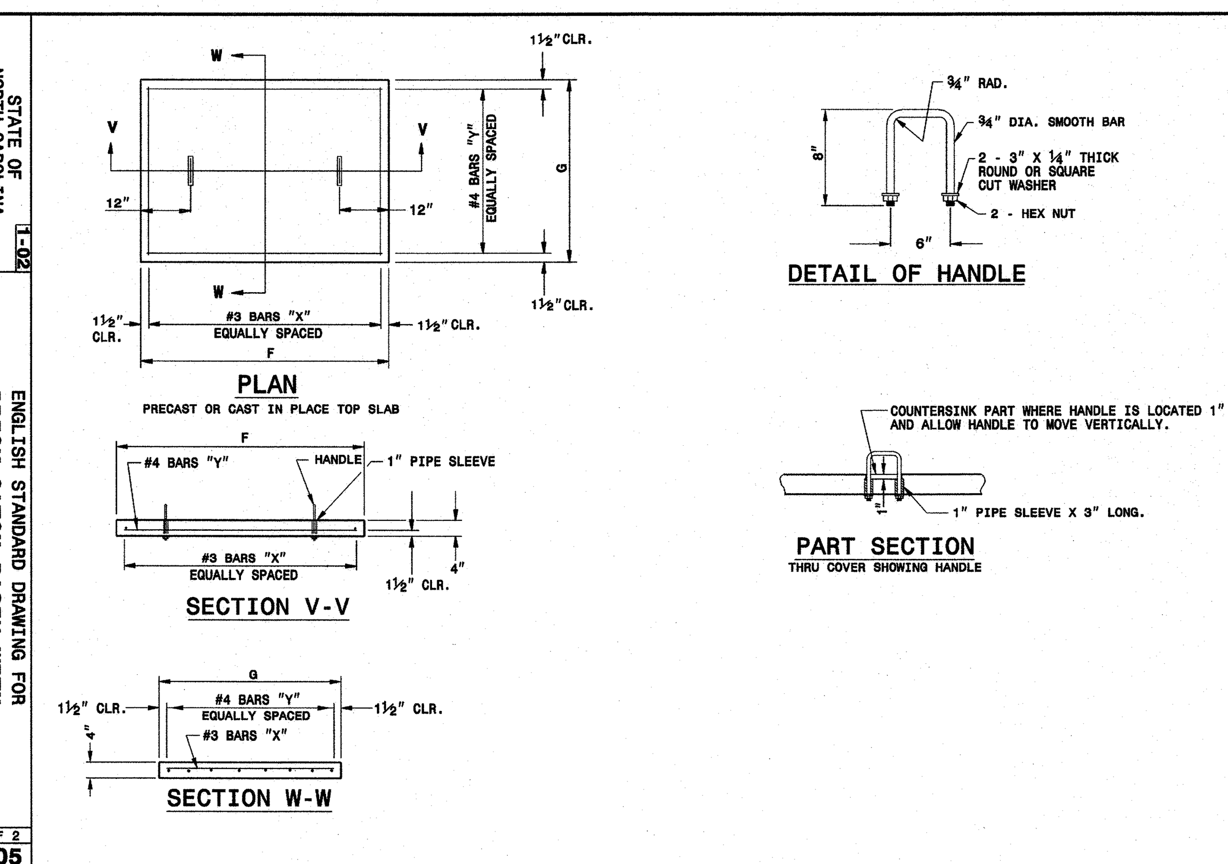

STATE OF NORTH CAROLINA DEPT. OF TRANSPORTATION DIVISION OF HIGHWAYS RALEIGH, N.C. 1-02 ENGLISH STANDARD DRAWING FOR BRICK CATCH BASIN WITH SINGLE AND MULTIPLE PIPES 12" THRU 48" PIPE SHEET 2 OF 2 840.05

STATE OF NORTH CAROLINA DEPT. OF TRANSPORTATION DIVISION OF HIGHWAYS RALEIGH, N.C. 1-02

ENGLISH STANDARD DRAWING FOR **FRAME, GRATES, AND HOOD** FOR USE ON STANDARD CATCH BASIN

SHEET 2 OF 2 **840.03**

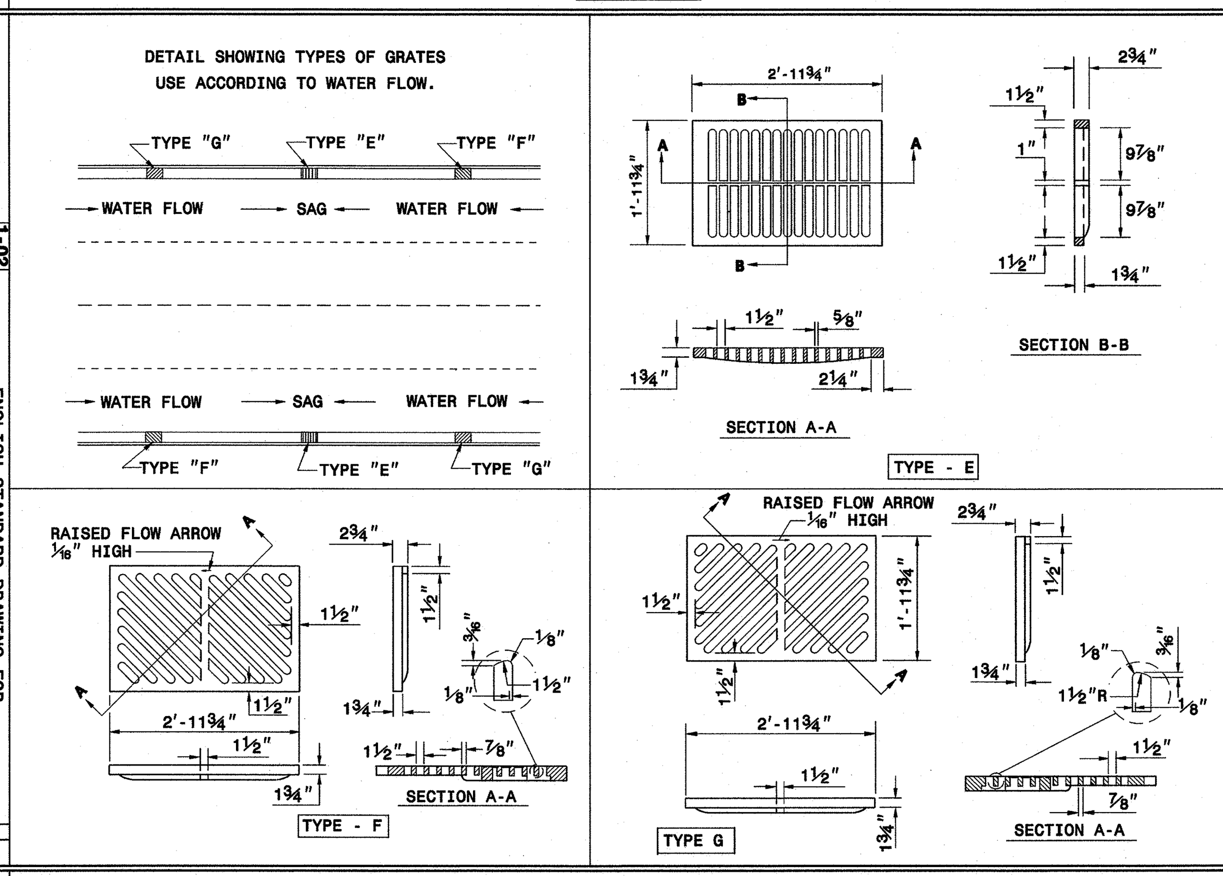

STATE OF NORTH CAROLINA DEPT. OF TRANSPORTATION DIVISION OF HIGHWAYS RALEIGH, N.C. 1-02 ENGLISH STANDARD DRAWING FOR FRAME, GRATES, AND HOOD FOR USE ON STANDARD CATCH BASIN SHEET 2 OF 2 840.03

STATE OF NORTH CAROLINA DEPT. OF TRANSPORTATION DIVISION OF HIGHWAYS RALEIGH, N.C. 7-06

ENGLISH STANDARD DRAWING FOR **BRICK OPEN THROAT CATCH BASIN** 12" THRU 48" PIPE

SHEET 1 OF 2 **840.05**

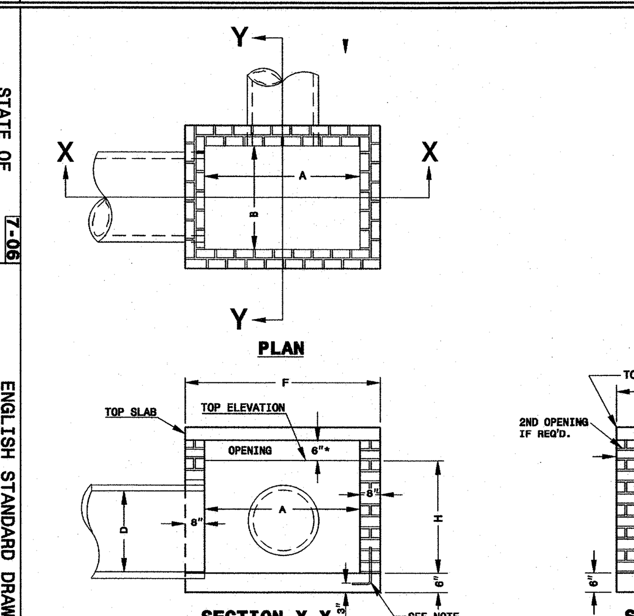

NOTES: MORTAR JOINTS ½" +/- ⅛" THICK.
USE CLASS "B" CONCRETE THROUGHOUT.
USE FORMS FOR CONSTRUCTION OF THE BOTTOM SLAB.
USE #4 BAR DOWELS AT 12" CENTERS.
DEDUCT FOR PIPE(S) FROM TOTAL CU. YDS. OF BRICK MASONRY.
PROVIDE ALL CATCH BASINS OVER 3'-6" IN DEPTH WITH STEPS 12" ON CENTER. USE STEPS WHICH COMPLY WITH STD. DRAWING 840.66.
CONCAVE TOOL ALL EXPOSED MORTAR JOINTS.
USE BRICK OR CONCRETE BLOCK WHICH COMPLIES WITH THE REQUIREMENTS OF SECTION 840 OF THE STANDARD SPECIFICATIONS.
IF REINFORCED CONCRETE PIPE IS SET IN BOTTOM SLAB OF BOX, ADD TO SLAB AS SHOWN ON STD. NO. 840.00.
FOR 8'-0" IN HEIGHT OR LESS USE 6" WALLS AND BOTTOM SLAB. OVER 8'-0" TO 16'-0" IN HEIGHT USE 8" WALLS AND BOTTOM SLAB. ADJUST QUANTITIES ACCORDINGLY.
CONSTRUCT WITH PIPE CROWNS MATCHING.
CHAMFER ALL EXPOSED CORNERS 1".
DRAWING NOT TO SCALE.
* INCREASE THE SIZE OF THE 6" OPENING TO 8" MAX., AS DIRECTED BY THE ENGINEER BY ADDING 2" TO THE WALL HIEGHT ABOVE THE TOP ELEVATION. ADJUST QUANTITIES ACCORDINGLY.

MIN. DIMENSIONS AND QUANTITIES FOR CATCH BASIN (BASED ON MIN. HEIGHT, H)

DIM'S OF BOX & PIPE				REINFORCING					SLAB DIMENSIONS		CU. YDS. CONC. IN BOX			TOTAL BRICK MASONRY		DEDUCTION ONE PIPE		DED. ONE 6" THROAT OPENING
PIPE	SPAN	WIDTH	HEIGHT	BARS - X		BARS - Y		TOTAL										
D	A	B	H	NO.	LENGTH	NO.	LENGTH	LBS	F	G	TOP SLAB	BOT. SLAB	TOTAL	PER FT. HT.	TOT. FOR H	C.S.	R.C.	CU.YDS.
12"	3'-6"	2'-3"	1'-10"	5	3'-4"	7	4'-7"	28	4'-10"	3'-7"	0.214	0.321	0.535	0.350	0.656	0.020	0.037	0.043
15"	3'-6"	2'-3"	2'-1"	5	3'-4"	7	4'-7"	28	4'-10"	3'-7"	0.214	0.321	0.535	0.350	0.744	0.031	0.059	0.043
18"	4'-0"	2'-8"	2'-4"	6	3'-9"	8	5'-1"	36	5'-4"	4'-0"	0.263	0.395	0.658	0.395	0.938	0.044	0.081	0.049
24"	4'-0"	2'-8"	2'-10"	6	3'-9"	8	5'-1"	36	5'-4"	4'-0"	0.263	0.395	0.658	0.395	1.136	0.078	0.134	0.049
30"	4'-0"	3'-6"	3'-4"	6	4'-7"	10	5'-1"	44	5'-4"	4'-10"	0.318	0.477	0.795	0.436	1.472	0.122	0.199	0.049
36"	4'-6"	4'-0"	3'-10"	6	5'-1"	11	5'-7"	52	5'-10"	5'-4"	0.384	0.576	0.960	0.485	1.879	0.176	0.278	0.056
42"	5'-0"	4'-6"	4'-4"	6	5'-7"	13	6'-1"	65	6'-4"	5'-10"	0.456	0.684	1.140	0.535	2.340	0.240	0.371	0.062
48"	5'-0"	5'-0"	4'-10"	6	6'-1"	14	6'-1"	71	6'-4"	6'-4"	0.495	0.743	1.238	0.559	2.725	0.313	0.476	0.062

STATE OF NORTH CAROLINA DEPT. OF TRANSPORTATION DIVISION OF HIGHWAYS RALEIGH, N.C. 7-06 ENGLISH STANDARD DRAWING FOR BRICK OPEN THROAT CATCH BASIN 12" THRU 48" PIPE SHEET 1 OF 2 840.05

STATE OF NORTH CAROLINA DEPT. OF TRANSPORTATION DIVISION OF HIGHWAYS RALEIGH, N.C. 7-06

ENGLISH STANDARD DRAWING FOR **DROP INLET FRAME AND GRATES** FOR USE WITH STD. DWG.S 840.14 AND 840.15

SHEET 1 OF 1 **840.16**

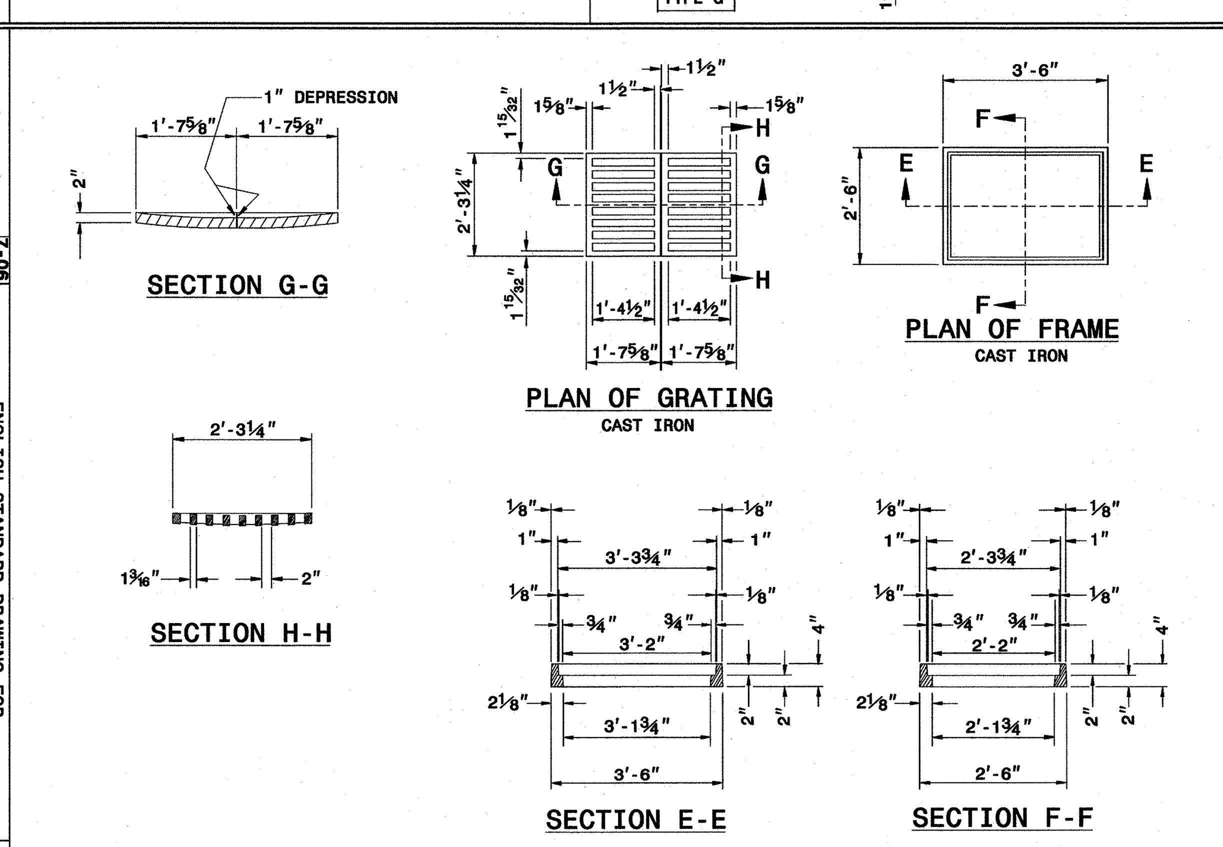

STATE OF NORTH CAROLINA DEPT. OF TRANSPORTATION DIVISION OF HIGHWAYS RALEIGH, N.C. 7-06 ENGLISH STANDARD DRAWING FOR DROP INLET FRAME AND GRATES FOR USE WITH STD. DWG.S 840.14 AND 840.15 SHEET 1 OF 1 840.16

STATE OF NORTH CAROLINA DEPT. OF TRANSPORTATION DIVISION OF HIGHWAYS RALEIGH, N.C. 1-02

ENGLISH STANDARD DRAWING FOR **BRICK CATCH BASIN** 12" THRU 54" PIPE

SHEET 2 OF 2 **840.01**

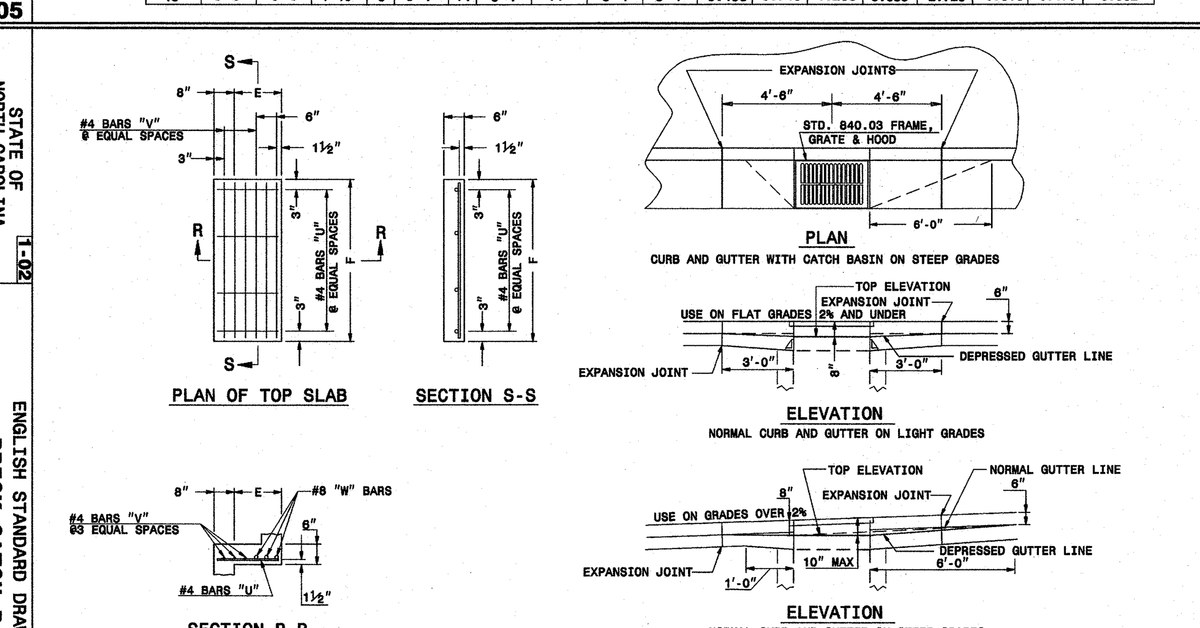

MINIMUM DIMENSIONS AND QUANTITIES FOR BRICK CATCH BASIN(BASED ON MIN. HEIGHT, H, WITH NO RISER)*

DIMENSIONS OF BOX AND PIPE						TOP SLAB DIMENSIONS		BARS-U		BARS-V		BARS-W		TOTAL	CU. YDS. CONC. IN BOX			BRICK MASONRY		DEDUCTIONS ONE PIPE	
PIPE	SPAN	WIDTH	WIDTH	SPAN	MIN. HEIGHT										TOP	BOTTOM	TOTAL	BRICK MSNR.	TOTAL		
D	A	B	C	G	H	E	F	NO.	LENGTH	NO.	LENGTH	NO.	LENGTH	LBS.	SLAB	SLAB	CONC.	IN WALLS	BRICK AND CONCRETE	C.M.	R.C.
12"	3'-0"	2'-2"	--	--	2'-9"	--	--	--	--	--	--	--	--	--	--	0.281	0.281	0.883	1.164	0.020	0.042
15"	3'-0"	2'-2"			3'-0"											0.281	0.281	0.963	1.244	0.031	0.047
18"	3'-0"	2'-2"			3'-3"											0.281	0.281	1.043	1.324	0.044	0.065
24"	3'-0"	2'-2"			3'-9"											0.281	0.281	1.204	1.485	0.078	0.121
30"	3'-0"	2'-2"	3'-4"		4'-3"	1'-2"	4'-4"	4	1'-6"	3	4'-1"	3	4'-1"	45	0.147	0.374	0.521	1.606	2.217	0.122	0.184
36"	3'-0"	2'-2"	3'-10"		4'-9"	1'-8"	4'-4"	4	2'-0"	4	4'-1"	3	4'-1"	49	0.187	0.415	0.602	1.914	2.516	0.176	0.261
42"	3'-0"	2'-2"		4'-5"	5'-3"	1'-5"	3'-6"	4	1'-9"	3	3'-3"	3	3'-3"	38	0.135	0.373	0.508	2.152	2.660	0.240	0.371
48"	3'-0"	2'-2"		5'-0"	5'-9"	2'-0"	3'-6"	4	2'-6"	4	3'-3"	3	3'-3"	41	0.173	0.410	0.583	2.415	2.998	0.313	0.477
54"	3'-0"	2'-2"		5'-7"	6'-3"	2'-7"	3'-6"	4	3'-0"	6	3'-3"	3	3'-3"	47	0.211	0.448	0.659	2.806	3.465	0.396	0.595

* RISER HAS .321 CUBIC YARDS OF BRICK MASONRY PER FOOT HEIGHT

STATE OF NORTH CAROLINA DEPT. OF TRANSPORTATION DIVISION OF HIGHWAYS RALEIGH, N.C. 1-02 ENGLISH STANDARD DRAWING FOR BRICK CATCH BASIN 12" THRU 54" PIPE SHEET 2 OF 2 840.01

STATE OF NORTH CAROLINA DEPT. OF TRANSPORTATION DIVISION OF HIGHWAYS RALEIGH, N.C. 1-02

ENGLISH STANDARD DRAWING FOR **DRAINAGE STRUCTURE STEPS**

SHEET 1 OF 1 **840.66**

NOTES:
INSTALL ALL STEPS PROTRUDING 4" FROM INSIDE FACE OF STRUCTURE WALL.
STEPS DIFFERING IN DIMENSIONS, CONFIGURATION, OR MATERIALS FROM THOSE SHOWN MAY ALSO BE USED PROVIDED THE CONTRACTOR HAS FURNISHED THE ENGINEER WITH DETAILS OF THE PROPOSED STEPS AND HAS RECEIVED WRITTEN APPROVAL FROM THE ENGINEER FOR THE USE OF SUCH STEPS.

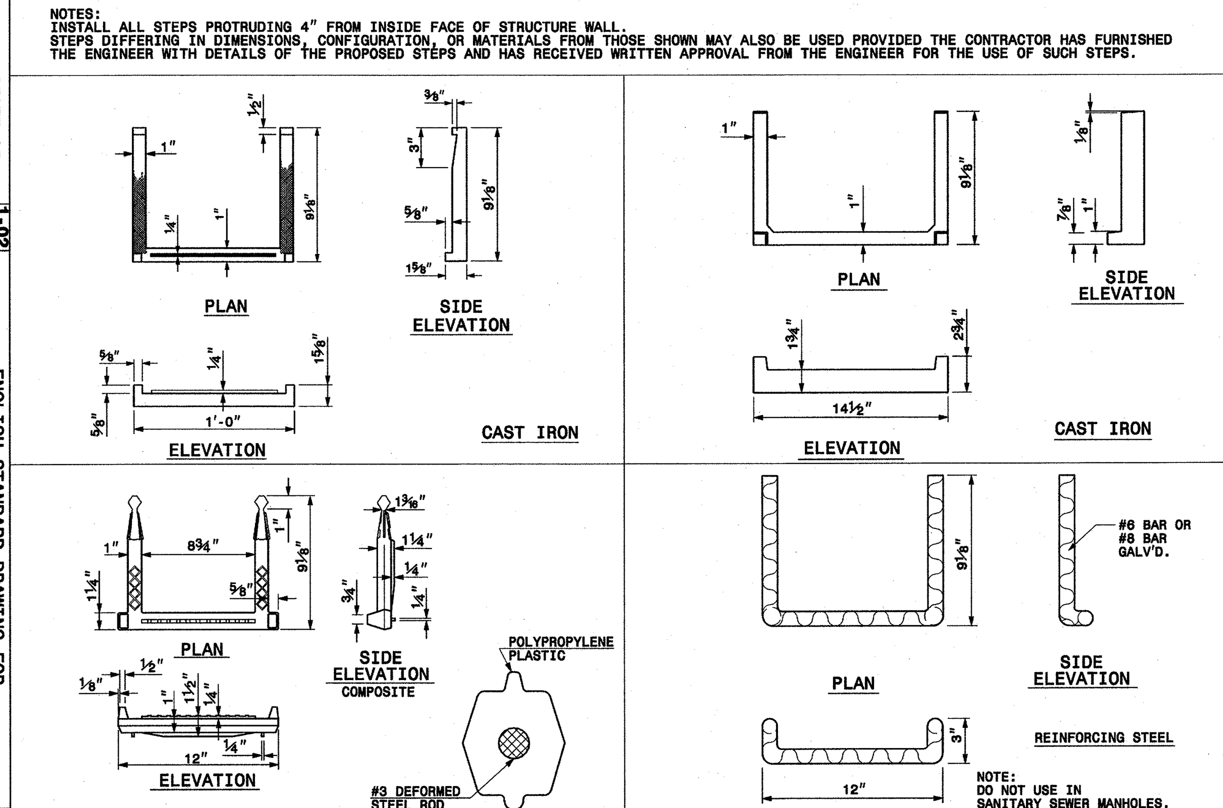

STATE OF NORTH CAROLINA DEPT. OF TRANSPORTATION DIVISION OF HIGHWAYS RALEIGH, N.C. 1-02 ENGLISH STANDARD DRAWING FOR DRAINAGE STRUCTURE STEPS SHEET 1 OF 1 840.66

STATE OF NORTH CAROLINA DEPT. OF TRANSPORTATION DIVISION OF HIGHWAYS RALEIGH, N.C. 7-06

ENGLISH STANDARD DRAWING FOR **BRICK CATCH BASIN** 12" THRU 54" PIPE

SHEET 1 OF 2 **840.01**

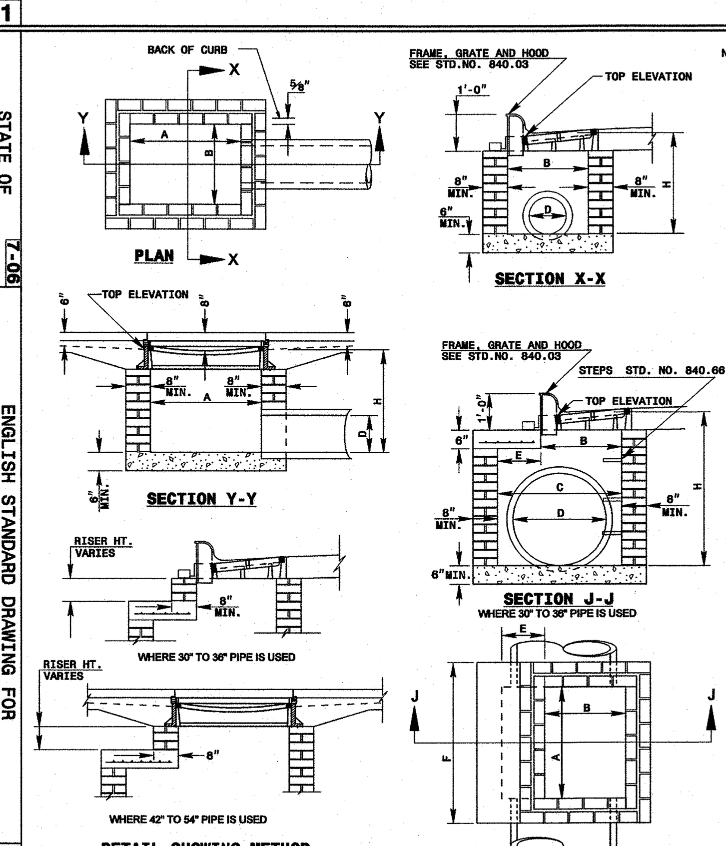

NOTES: MORTAR JOINTS ½" +/- ⅛" THICK.
USE CLASS "B" CONCRETE THROUGHOUT.
USE FORMS FOR CONSTRUCTION OF THE BOTTOM SLAB.
DEDUCT FOR PIPE(S) FROM TOTAL CU. YDS. OF BRICK MASONRY.
USE #4 BAR DOWELS AT 12" CENTERS.
PROVIDE ALL CATCH BASINS OVER 3'-6" IN DEPTH WITH STEPS 12" ON CENTER. USE STEPS WHICH COMPLY WITH STD. DRAWING 840.66.
USE TYPE "E", "F" AND "G" GRATES UNLESS OTHERWISE INDICATED.
USE BRICK OR CONCRETE BLOCK WHICH COMPLIES WITH THE REQUIREMENTS OF SECTION 840 OF THE STANDARD SPECIFICATIONS.
IF REINFORCED CONCRETE PIPE IS SET IN BOTTOM SLAB OF BOX, ADD TO SLAB AS SHOWN ON STD. NO. 840.00.
FOR 8'-0" IN HEIGHT OR LESS, USE 8" WALL. OVER 8'-0" IN HEIGHT, USE 12" WALL TO 8'-0" FROM TOP OF WALL AND 8" WALL FOR THE REMAINING 8'-0". QUANTITIES TO BE ADJUSTED ACCORDINGLY.
CONSTRUCT WITH PIPE CROWNS MATCHING.
CHAMFER ALL EXPOSED CORNERS 1".
DRAWING NOT TO SCALE.

STATE OF NORTH CAROLINA DEPT. OF TRANSPORTATION DIVISION OF HIGHWAYS RALEIGH, N.C. 7-06 ENGLISH STANDARD DRAWING FOR BRICK CATCH BASIN 12" THRU 54" PIPE SHEET 1 OF 2 840.01

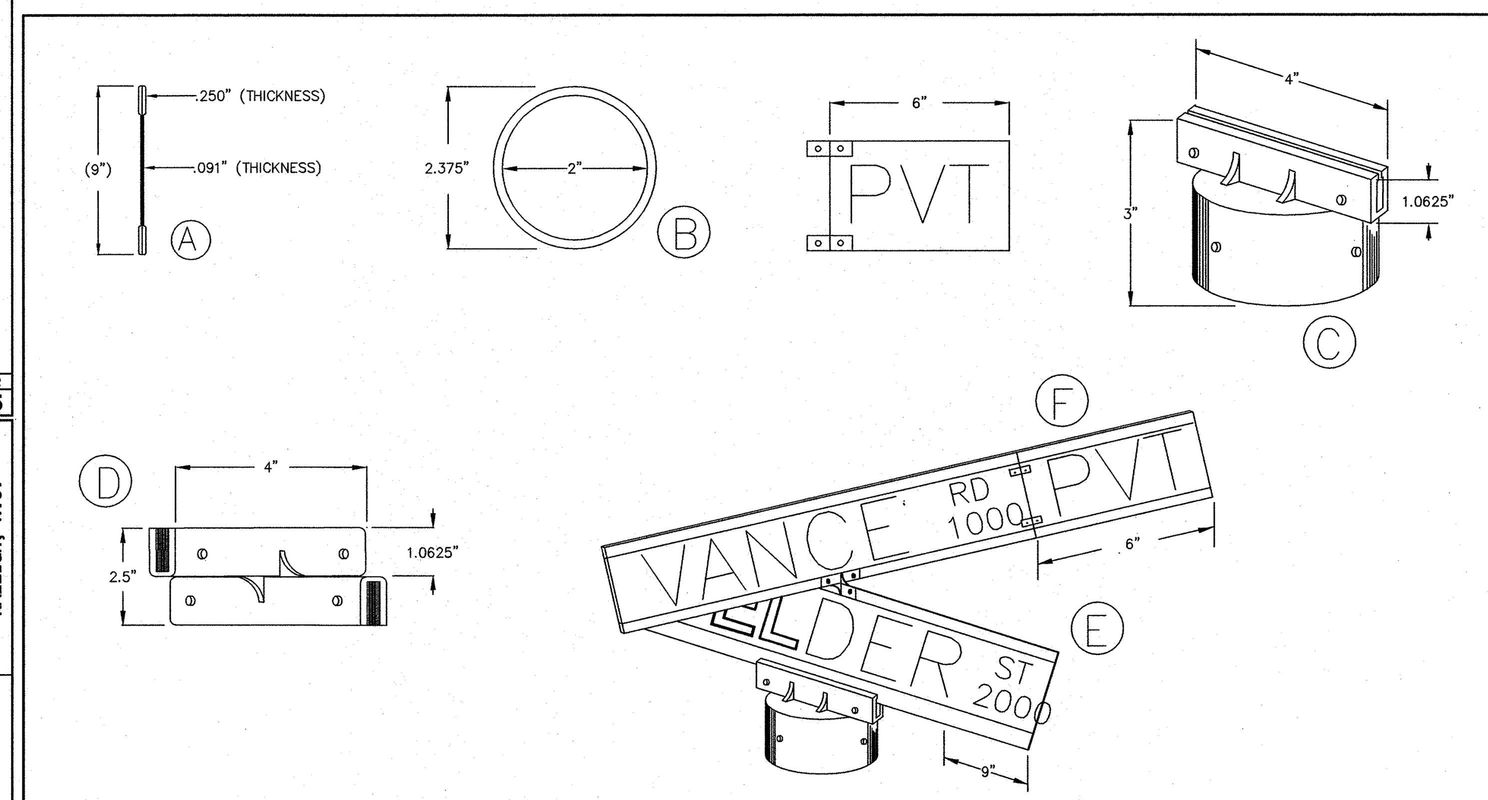

GENERAL NOTES:

1. BLADES SHALL BE EXTRUDED ALUMINUM 6063T5 OR 6063T6 ALLOY .080" THICK. POST SHALL BE 10'-0" IN LENGTH, TUBULAR 2.375 O.D. GLOSS GALVANIZED STEEL CONTINUOUS MILL DIPPED, WITH NO RAW ENDS; OR 40, 1540 WALL ALUMINUM (SEE DETAIL B).
2. CAP TO BE ALUMINUM #380 ALLOY OR EQUAL SLOTTED FOR .25" EXTRUDED BLADE; 2.375" I.D. BASE, DIE CAST AND POLISHED. CAP SHALL BE TAPPED TO RECEIVE AND INCLUDE 3 STAINLESS STEEL SET SCREWS FOR POST MOUNTING AND 2 STAINLESS STEEL SET SCREWS FOR BLADE MOUNTING. SET SCREWS TO HAVE ALLEN HEADS (SEE DETAIL C).
3. BLADE SPACER BRACKET SHALL MEET SAME SPECIFICATIONS AS THE CAP WITH 2 SCREWS TO EACH BLADE MOUNTING (SEE DETAIL D).
4. THE FACE OF ALL BLADES SHALL MEET COVERED WITH ENGINEERING GRADE SHEETING WITH #2290 WHITE DIE CUT LETTERS WITH REVERSED SCREENED #708 TRANSPARENT GREEN. THE PRIMARY LETTERS SHALL BE 5" HIGH UPPER CASE, FHWA SERIES B AND PREFIX/SUFFIX LETTERS SHALL BE 2-1/2" HIGH, UPPER CASE, FHWA SERIES C. BLOCK NUMBERS SHALL BE PLACED IN THE LOWER RIGHT CORNER AND SHALL BE 2-1/2" HIGH, FHWA SERIES C. ALL MATERIALS TO BE VACUUM AND HEAT APPLIED TO A PREPARED ALLUMINUM BLADE, WHICH HAS BEEN CLEANED AND ALL FOREIGN MATERIAL REMOVED (SEE DETAIL E).
5. LETTERS, NUMBERS AND SPACING SHALL CONFORM TO THE STANDARD ALPHABETS FOR HIGHWAY SIGNS, 1966 EDITION, REPRINT MAY, 1972 BY THE U.S. DEPARTMENT OF TRANSPORTATION, FEDERAL HIGHWAY ADMINISTRATION, OFFICE OF TRAFFIC OPERATION.
6. ALL STREET NAME SIGNS ARE SUBJECT TO APPROVAL BY THE CITY/COUNTY ENGINEER. BLOCK NUMBERS SHALL BE PROVIDED ON SIGNS AND CORRESPOND TO OFFICIALLY APPROVED ADDRESSES.
7. IF THE STREET IS INTENDED TO BE PRIVATE, A SUPPLEMENTAL PLATE IS REQUIRED. THE SUPPLEMENTAL PLATE MAY BE EITHER ATTACHED TO THE SIGN OR AN EXTENDED BLADE WITH BLACK ON YELLOW SHEETING MAY BE USED. THE SIGN SHALL HAVE BLACK LETTERS THAT SHOW PVT TO STAND FOR PRIVATE. THE LETTERS SHALL BE 2-1\2" HIGH, UPPER CASE, FHWA SERIES C, ON ON A BACKGROUND OF YELLOW ENGINEERING GRADE SHEETING. (SEE DETAIL F).

STREET NAME SIGN

Scale: NTS 2/801

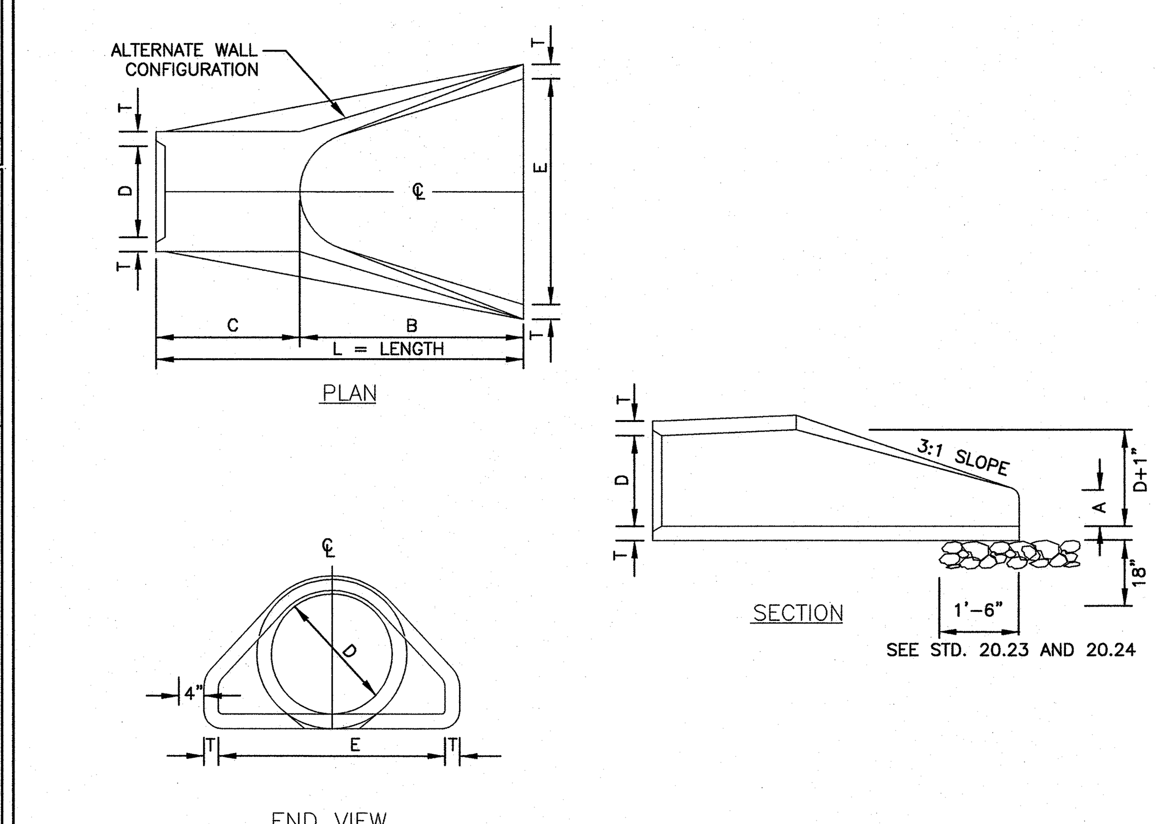

TABLE OF DIMENSIONS							
D	T	A	B	C	E	L	WT.
12"	2-1/4"	4"	2'-0"	4'-1"	2'-0"	6'-1"	730
15"	2-1/4"	6"	2'-3"	3'-10"	2'-0"	6'-1"	730
18"	2-1/2"	9"	2'-3"	3'-10"	3'-0"	6'-1"	1190
24"	3"	10"	3'-8"	2'-6"	4'-0"	6'-2"	1770
30"	3-1/2"	1'-0"	4'-6"	1'-8"	5'-0"	6'-2"	2380
36"	4"	1'-3"	5'-3"	2'-11"	6'-0"	8'-2"	5320
42"	4-1/2"	1'-9"	5'-3"	2'-11"	6'-6"	8'-2"	5920
48"	5"	2'-0"	6'-0"	2'-2"	7'-0"	8'-2"	7470
54"	5-1/2"	2'-3"	5'-6"	2'-10"	7'-6"	8'-4"	8810
60"	6"	2'-6"	5'-0"	3'-3"	8'-0"	8'-3"	11180
66"	6-1/2"	3'-0"	6'-0"	2'-3"	8'-6"	8'-3"	12530
72"	7"	3'-0"	6'-6"	1'-9"	9'-0"	8'-3"	13980

GENERAL NOTES:

1. SEE FORMER NCDOT STANDARD 310.01 FOR DETAILS.
2. REINFORCEMENT SHALL CONFORM TO THE REQUIREMENTS OF REINFORCED CONCRETE PIPE OF LIKE DIAMETER PER AASHTO M170, TABLE 2, WALL B.
3. ALL CONCRETE TO BE 3600 P.S.I COMPRESSIVE STRENGTH.
4. PROVIDE TONGUE OR SPIGOT JOINT AT INLET END SECTION.
5. PROVIDE GROOVE OR BELL JOINT AT OUTLET END SECTION.
6. THE DIMENSIONS FOR END SECTIONS SHALL SUBSTANTIALLY AGREE WITH THE TABLE. MINOR VARIATIONS WILL BE PERMITTED BASED ON THE MANUFACTURER'S STANDARD FORMS AND TEMPLATES.
7. NOT TO BE USED IN NCDOT MAINTAINED RIGHT OF WAY.

FLARED END SECTION
12" THRU 72" PIPE

Scale: NTS 1/801
CLD STD. 20.22

MERRICK® & COMPANY
1001 MOREHEAD SQUARE DRIVE, SUITE 530
CHARLOTTE, NC 28203
NC ENGINEERING FIRM F-0908 PHONE: 704.529.6500

THIS AND ANY OTHER ELECTRONIC MEDIA COUNTERPART IS AN INSTRUMENT OF SERVICE PREPARED BY MERRICK AND COMPANY FOR A DEFINED PROJECT. IT IS NOT INTENDED OR REPRESENTED TO BE SUITABLE FOR REUSE IN WHOLE OR IN PART ON EXTENSIONS OF THE PROJECT OR ON ANY OTHER PROJECT. REUSE OR MODIFICATION, OF ANY UTILIZATION IF NOT A FINISHED INSTRUMENT, WITHOUT THE PRIOR EXPRESS WRITTEN CONSENT OF MERRICK AND COMPANY SHALL BE AT THE SOLE RISK FOR THE UNAUTHORIZED USER WITHOUT LIABILITY OR LOSS EXPOSURE TO MERRICK AND COMPANY.

Shea Homes, LLC
8008 Corporate Center Dr.
Suite 300
Charlotte, NC 28226

REVISIONS:

REV	REVISION DESCRIPTION	DATE:	CHANGED BY:	CHECKED BY:	APPROVED BY:
1	Initial Agency Review	03.10.14	CIP	CIP	CIP

		DATE:
DESIGN BY:	SRT	11/18/13
DRAWN BY:	KML	11/18/13
CHECKED BY:	MJK	01/29/14
APPROVED BY:	CIP	01/29/14

Barrington 2
Waxhaw, Union County, NC

Civil Site Details

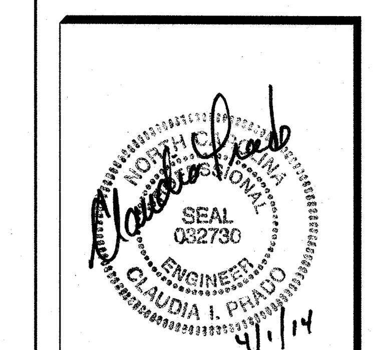

JOB NO: 65118007
DATE: 01/29/14
SHEET C801

STATE OF NORTH CAROLINA
DEPT. OF TRANSPORTATION
DIVISION OF HIGHWAYS
RALEIGH, N.C.

7-08

ENGLISH STANDARD DRAWING FOR
PRECAST MANHOLE 4', 5' AND 6' DIAMETER
12" THRU 48" PIPE

SHEET 1 OF 1
840.52

GENERAL NOTES

USE 4000 PSI MINIMUM COMPRESSIVE STRENGTH CONCRETE.

FABRICATE, ASSEMBLE AND DESIGN PRECAST MANHOLE COMPONENTS ACCORDANCE WITH AASHTO M199.

ASSEMBLE RISER AND GRADE RINGS WITH THE STEPS SPACED 12" FROM THE TOP TO THE BOTTOM OF THE MANHOLE.

WHERE THE MANHOLE IS EXPOSED TO ROAD TRAFFIC, CONSTRUCT THE TOP OF THE MANHOLE FLUSH WITH THE GROUND AND A MINIMUM OF 9" ABOVE THE GROUND AT OTHER LOCATIONS.

LIMIT DEPTH OF FILL TO 30'-0" FROM FINISH GRADE TO TOP OF BOTTOM SLAB.

THE MIN. SLAB THICKNESS 'T' IS THE DIMENSION OF THE THINNEST PORTION OF THE TOP/BOTTOM SLAB.

* TOP MAT OF REINFORCEMENT MAY BE NEGLECTED IF TOP SLAB HAS A DISTINGUISHABLE TOP AND BOTTOM.

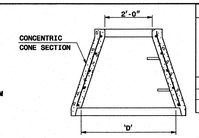

ALTERNATE CONE SECTION

D	W	T	As
INTERNAL DIAMETER (FT.)	MIN. WALL THICKNESS (IN.)	MIN. TOP/BOTTOM SLAB THICKNESS (IN.)	MIN. CIRCUMFERENTIAL AREA OF STEEL PER VERTICAL FT. (SQ. IN.)
4	4	6	0.12
5	5	8	0.15
6	6	8	0.18

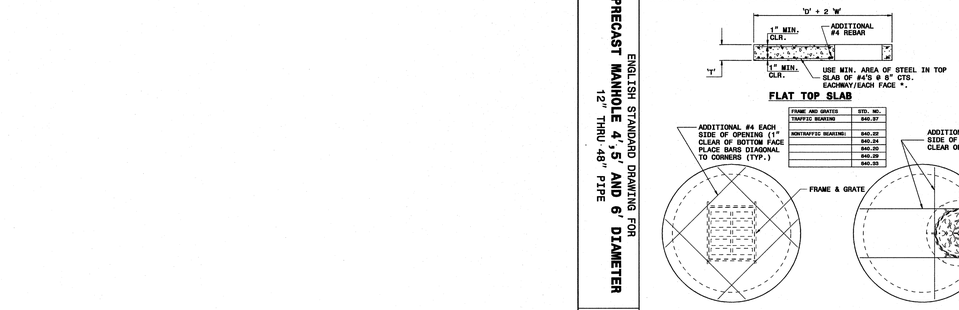

FLAT TOP SLAB

FRAME AND GRATES	STD. NO.
TRAFFIC BEARING	840.37
NONTRAFFIC BEARING:	840.22
	840.24
	840.30
	840.29
	840.33

GRATED INLET OPTION **MANHOLE OPTION** **TYPICAL MANHOLE SECTION**

STATE OF NORTH CAROLINA
DEPT. OF TRANSPORTATION
DIVISION OF HIGHWAYS
RALEIGH, N.C.

7-08

ENGLISH STANDARD DRAWING FOR
PRECAST MANHOLE 4', 5' AND 6' DIAMETER
12" THRU 48" PIPE

SHEET 1 OF 1
840.52

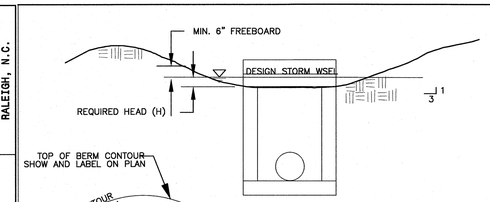

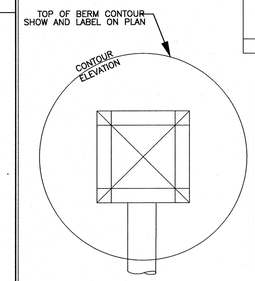

YARD INLET	AREA(AC)	CFS	HEAD H(FT)	NO. 6" OPENINGS
DI-A9	0.58	4.3	0.25	4 SIDES
DI-C13	0.1	1.0	0.15	2 SIDES A & B SPAN
DI-C17	0.58	4.3	0.25	4 SIDES
DI-C22	0.58	4.3	0.4	2 SIDES A & B SPAN
DI-C23	0.15	0.86	0.10	4 SIDES
DI-D02	0.25	1.9	0.38	1 SIDES A SPAN
DI-D03	0.42	3.1	0.20	4 SIDES
DI-E04	3.0	11.5	0.44	4 SIDES

YARD INLETS PER NCDOT OPEN THROAT CATCH BASIN STD DETAIL 840.04

GRADING AT YARD INLET

Scale: NTS

3
802

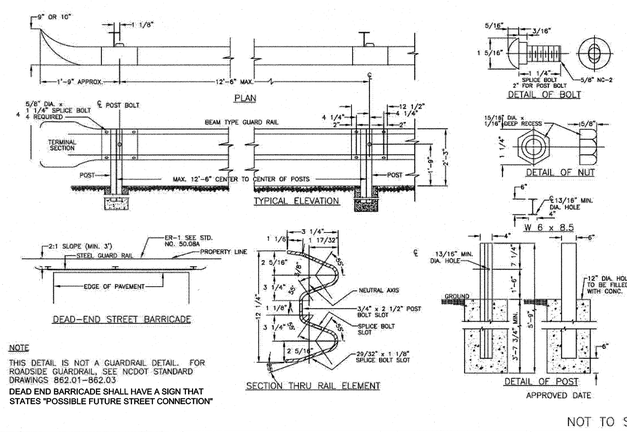

NOTE

THIS DETAIL IS NOT A GUARDRAIL DETAIL. FOR ROADSIDE GUARDRAIL, SEE NCDOT STANDARD DRAWINGS 862.01–862.03

DEAD END BARRICADE SHALL HAVE A SIGN THAT STATES "POSSIBLE FUTURE STREET CONNECTION"

APPROVED DATE

NOT TO SCALE

DEAD END STREET BARRICADE

Scale: NTS

2
802

GENERAL NOTES:

1. STEEL BEAM TYPE GUARD RAILS SHALL BE INSTALLED AT THE END OF ALL DEAD-END STREETS, EXCEPT CUL-DE-SAC STREETS WHICH HAVE BEEN IMPROVED WITH A PERMANENT TURN-AROUND.
2. FOR STREETS 26' IN WIDTH THE GUARD RAIL SHALL CONSIST OF TWO(2) 12'-6" SECTIONS OR ONE(1) 25' SECTION, THREE (3) STEEL POSTS, AND TWO (2) TERMINAL SECTIONS. FOR STREETS GREATER THAN 25' IN WIDTH THE GUARD RAIL SHALL SPAN THE ENTIRE WIDTH OF THE STREET.
3. GUARD RAIL SHALL CONSIST OF RAIL ELEMENTS FABRICATED TO DEVELOP CONTINUOUS BEAM STRENGTH AND INSTALLED AS SHOWN.
4. MINIMUM THICKNESS OF GUARD RAIL SHALL BE 12 GAGE U.S. STANDARD. THE RAIL ELEMENT INCLUDING SPLICES, SHALL HAVE A MINIMUM ULTIMATE TENSILE STRENGTH OF 80,000 LBS. GUARD RAIL PARTS FURNISHED SHALL BE INTERCHANGEABLE WITH SIMILAR PARTS REGARDLESS OF THE SOURCE OF MANUFACTURER. THE HOLES FOR CONNECTING BOLTS SHALL BE PUNCHED OF DRILLED, BURNING WILL NOT BE PERMITTED.
5. THE GUARD, BOLTS, NUTS, STEEL POSTS. AND ALL OTHER METAL PARTS SHALL BE GALVANIZED TO CONFORM TO THE REQUIREMENTS FOR THE COATING CLASS, (2.50 OUNCES PER SQUARE FOOT) OF THE CURRENT SPECIFICATIONS FOR ZINC-COATED (GALVANIZED) IRON, AND STEEL SHEETS, COILS, AND CUT LENGTHS, IN ACCORDANCE WITH ASTM 123A.
6. IF THE AVERAGE SPELTER COATING AS DETERMINED FROM THE REQUIRED SAMPLES IS LESS THAN TWO (2) OUNCES OF SPELTER PER SQUARE FOOT, OR IF ANY ONE SPECIMEN HAS LESS THAN 1.8 ONCES OF SPELTER PER SQUARE FOOT OF DOUBLE EXPOSED SURFACE, THE LOT SAMPLED SHALL BE REJECTED, THE FINISHED SHEETS SHALL BE OF FIRST CLASS COMMERCIAL QUALITY, FREE FROM INJURIOUS DEFECTS, SUCH AS BLISTERS, FLUX, AND UNCOATED SPOTS.
7. THE GUARD RAIL SHALL BE INSPECTED TO DETERMINE THAT THE MATERIAL, DIMENSIONS, AND WORKMANSHIP ARE IN ACCORDANCE WITH THIS PLAN.
8. WHERE A DEAD-END STREET REQUIRES GUARD RAIL, END OF ROADWAY MARKER SIGNS SHALL ALSO BE REQUIRED. (SEE STD. 50.08A & 50.08B) (ER-1).

NOT TO SCALE

DEAD END STREET BARRICADE
GENERAL NOTES

Scale: NTS

1
802

MERRICK® & COMPANY
10715 MONROE ROAD, SUITE 200
CHARLOTTE, NC 28209
NC ENGINEERING FIRM F-0908 PHONE: 704-529-6500

OF A WRITTEN AGREEMENT BETWEEN MERRICK AND COMPANY FOR A DEFINED PROJECT, OR IF PRIOR WRITTEN CONSENT IS OBTAINED FROM MERRICK AND COMPANY, THIS DOCUMENT IS NOT TO BE USED FOR ANY PURPOSE OR IN ANY OTHER PROJECT OR IN ANY OTHER LOCATION FOR ANY OTHER PROJECT. ALTERATIONS TO THIS DOCUMENT ARE PROHIBITED WITHOUT THE PRIOR EXPRESS WRITTEN CONSENT OF MERRICK AND COMPANY, AND ARE ALSO PROHIBITED FROM BEARING THE SEAL OF MERRICK AND COMPANY, WITHOUT LIABILITY OR LOSS EXPOSURE TO MERRICK AND COMPANY.

Shea Homes, LLC
8008 Corporate Center Dr.
Suite 300
Charlotte, NC 28226

REVISIONS:

REV	REVISION DESCRIPTION	DATE:	DRAWN BY:	CHECKED BY:	APPROVED BY:
1	Initial Agency Review	03.10.14	CP	CP	CP

		DATE:
DESIGN BY:	SRT	11/18/13
DRAWN BY:	KML	11/18/13
CHECKED BY:	MJK	01/29/14
APPROVED BY:	CP	01/29/14

Barrington 2
Waxhaw, Union County, NC

Civil Site Details

NORTH CAROLINA PROFESSIONAL SEAL 032730 ENGINEER CLAUDIA I. PRADO
4/1/14

JOB NO: 65118007
DATE: 01/29/14
SHEET C802

Q:\CHA\Projects\8007-00-Bell Property\Design\CDs\Civil\8007-C800-Details-R01.dwg

SEEDING SPECIFICATIONS

3:1 SLOPES OR FLATTER:

1. APPLY AGRICULTURAL LIME AT THE RATE OF 90 lbs/1000 SF.
2. APPLY 10-10-10 COMMERCIAL FERTILIZER AT THE RATE OF 20 lbs/1000 SF.
3. SEED IN ACCORDANCE TO THE FOLLOWING SCHEDULE AND APPLICATION RATES:

DATE:	TYPE:	PLANTING RATE:
AUG 15 - NOV 1	TALL FESCUE	300 lbs/ac OR 7 lbs/1000 SF
NOV 1 - MAR 1*	TALL FESCUE AND ABRUZZI RYE	300 lbs/ac OR 7 lbs/1000 SF 25 lbs/ac OR 1/2 lb/1000 SF
MAR 1 - APR 15	TALL FESCUE	300 lbs/ac OR 7 lbs/1000 SF
APR 15 - JUL 30	MULLED COMMON BERMUDA GRASS	30 lbs/ac OR 1/2 lb/1000 SF
JUL 15 - AUG 15	TALL FESCUE AND BROWN TOP MILLET OR SORGHUM SUDAN HYBRIDS	300 lbs/ac OR 7 lbs/1000 SF 35 lbs/ac OR 3/4 lb/1000 SF 30 lbs/ac OR 3/4 lb/1000 SF

4. MULCH WITH STRAW APPLIED AT THE RATE OF 75-100 lbs/1000 SF.
   * HEAVILY MULCHED DURING JANUARY TO MARCH PERIOD.

SLOPES GREATER THAN 3:1 TO 2:1 SLOPES:

1. APPLY AGRICULTURAL LIME AT THE RATE OF 90 lbs/1000 SF.
2. APPLY 10-10-10 COMMERCIAL FERTILIZER AT THE RATE OF 20 lbs/1000 SF.
3. SEED IN ACCORDANCE TO THE FOLLOWING SCHEDULE AND APPLICATION RATES:

DATE:	TYPE:	PLANTING RATE:
MAR - JUN 1	SERICEA LESPEDEZA (SCARIFIED) AND	50 lbs/ac OR 1 1/2 lbs/1000 SF
MAR - APR 1	ADD TALL FESCUE OR	150 lbs/ac OR 3 1/2 lbs/1000 SF
MAR - JUN	ADD WEEPING LOVEGRASS	5 lbs/ac OR 1/8 lb/1000 SF
JUN - SEPT 1***	TALL FESCUE AND BROWN TOP MILLET OR SORGHUM SUDAN HYBRIDS	60 lbs/ac OR 1 1/2 lbs/1000 SF 35 lbs/ac OR 3/4 lb/1000 SF 30 lbs/ac OR 3/4 lb/1000 SF
SEP - MAR 1	SERICEA LESPEDEZA (UNHULLED - UNSCARIFIED) TALL FESCUE MILLET OR SUDAN	70 lbs/ac OR 1 3/4 lbs/1000 SF 150 lbs/ac OR 3 1/2 lbs/1000 SF 20 lbs/ac OR 1/2 lb/1000 SF

SLOPES GREATER THAN 3:1 TO 2:1 SLOPES CONT:

4. MULCH WITH 6" STRAW APPLIED AT THE RATE OF 60-70 lbs/1000 SF AND ANCHOR WITH ASPHALT EMULSION TACK COAT APPLIED AT THE RATE OF 14-28 GAL/1000 SF OR 800-1200 GAL/ac.

*** TEMPORARY RESEED SEPT. 1 AT RECOMMENDED RATES.

SEEDBED PREPARATION NOTES:

1. SURFACE WATER CONTROL MEASURES TO BE INSTALLED ACCORDING TO PLAN.
2. AREAS TO BE SEEDED SHALL BE RIPPED AND SPREAD WITH AVAILABLE TOPSOIL 3" DEEP. TOTAL SEEDBED PREPARED DEPTH SHALL BE 4" TO 6" DEEP.
3. LOOSE ROCKS AND OTHER OBSTRUCTIONS SHALL BE REMOVED FROM THE SURFACE SO THAT THEY WILL NOT INTERFERE WITH THE ESTABLISHMENT AND MAINTENANCE OF VEGETATION. SURFACE FOR FINAL SEEDBED PREPARATION, AT FINSH GRADES SHOWN, SHALL BE RESONABLY SMOOTH AND UNIFORM.
4. IF NO SOIL TEST IS TAKEN, FERTILIZER AND LIME TO BE ACCORDING TO SEEDING SPECIFICATIONS LISTED HERE. IN ADDITION, PROVIDE 15 lbs/1000 SF OF SUPERPHOSPHATE.
5. IF SOIL TEST IS TAKEN, PROVIDE LIME AND FERTILIZER ACCORDING TO SOIL TEST REPORT.
6. LIME AND FERTILIZER SHALL BE APPLIED UNIFORMLY AND MIXED WITH THE SOIL DURING SEEDBED PREPARATION.
7. ADDITIONAL EROSION CONTROL MEASURES MAY BE REQUIRED DEPENDING ON FIELD CONDITION.
8. MULCH TO BE TACKED OR MECHANICALLY TIED DOWN WITHIN TWO DAYS AFTER THE MULCH IS SPREAD.

SEEDING SPECIFICATION

Scale: NTS 6 / 803

GENERAL NOTES:
1. INLET PROTECTION MUST REMAIN IN PLACE WITHIN THE WORK AREA UNTIL ALL AREAS OF THE PROJECT ARE STABILIZED.
2. INSPECT INLETS AT LEAST ONCE WEEKLY AND AFTER EACH SIGNIFICANT (1/2" OR GREATER) RAINFALL EVENT.
3. CLEAR THE MESH WIRE OF ANY DEBRIS OR OTHER OBJECTS TO PROVIDE ADEQUATE FLOW FOR THE SUBSEQUENT RAINS.
4. TAKE CARE NOT TO DAMAGE OR UNDERCUT THE WIRE MESH DURING SEDIMENT REMOVAL.
5. REPLACE STONE AS NEEDED.
6. INLET PROTECTION MUST REMAIN IN PLACE WITHIN THE WORK AREA UNTIL ALL AREAS OF THE PROJECT ARE STABILIZED.

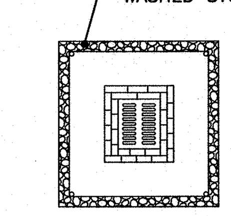

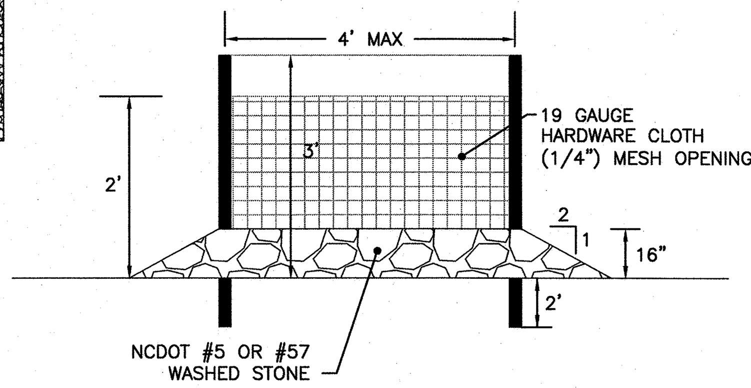

HARDWARE CLOTH & GRAVEL INLET PROTECTION

Scale: NTS 3 / 803
NCDENR 6.51

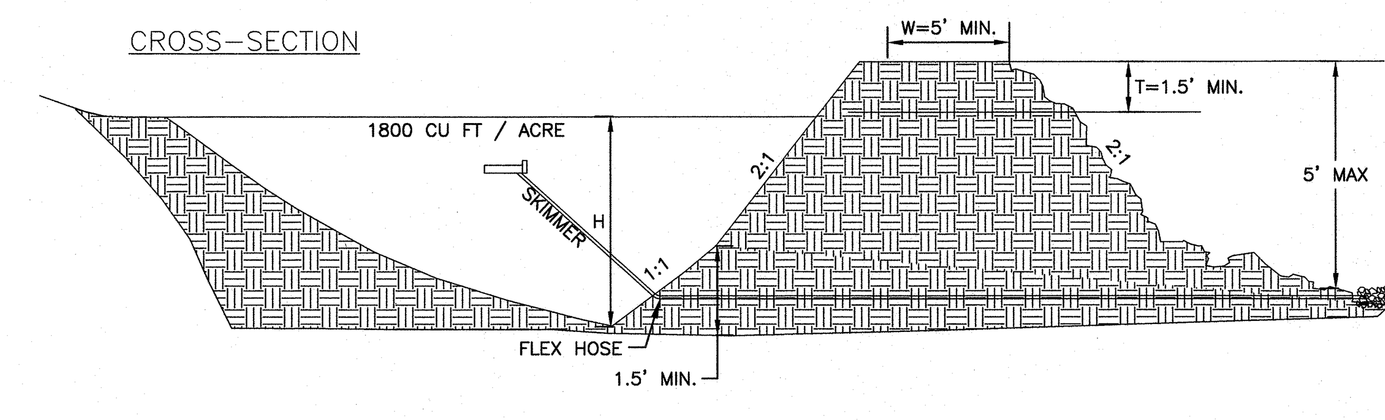

TEMPORARY SKIMMER BASIN DESIGN CRITERIA	
DRAINAGE AREA (ACRES)	< 10 AC.
MIN. LENGTH TO WIDTH RATIO	2:1
MIN. VOLUME REQUIRED	1800 (CU. FT. PER AC. DISTURBED)
SURFACE AREA REQUIRED	325 (SQ. FT. PER CFS Q10)

NOTE:
1. PLEASE REFER TO NCESCPDM SECTION #6.64 FOR ADDITIONAL DESIGN SPECIFICATIONS REGARDING TEMPORARY SKIMMER BASIN.
2. SEED AND PLACE MATTING FOR EROSION CONTROL ON INTERIOR AND EXTERIOR SIDESLOPES IMMEDIATELY AFTER INSTALLATION.
3. INSTALL A MINIMUM OF 3 COIR FIBER BAFFLES IN ACCORDANCE WITH PRACTICE STD. 6.65.

SKIMMER BASIN DATA:

BASIN	DRAINAGE AREA (ACRES)	DENUDED AREA (ACRES)	Q10	BASIN VOLUME REQUIRED (CUBIC FT.)	BASIN VOLUME PROVIDED (CUBIC FT.)	BASIN SURFACE AREA REQUIRED (SQ FT.)	BASIN SURFACE AREA PROVIDED (SQ FT.)	CLEANOUT DEPTH (FT.) H/2	H (FEET)	T (FEET)	W (FEET)
2	1.4	1.4	4.4	2520	2669	1439	1674	1.5	3.5	1.5'	5.0
3	2.6	2.6	8.2	4680	6651	2673	2853	1.5	3.5	1.5'	5.0
4–PRE	3	2.7	9.5	7920	39686	4524	16761	1.5	3.5	1.5'	5.0
4–POST	4.4	4.1	13.9	7920	14934	4524	7005	1.5	3.5	1.5'	5.0
5–PRE	3.4	3.4	10.7	6120	59038	3496	23048	1.5	3.5	1.5'	5.0
5–POST	3.3	3.3	10.7	6120	10135	3496	5002	1.5	3.5	1.5'	5.0

TEMPORARY SKIMMER BASIN

Scale: NTS 5 / 803
NCDENR 6.64.5

GENERAL NOTES:
1. INLET PROTECTION MUST REMAIN IN PLACE WITHIN THE WORK AREA UNTIL ALL AREAS OF THE PROJECT ARE STABILIZED.
2. INSPECT ROCK DOUGHNUT INLET PROTECTION AT LEAST WEEKLY AND AFTER EACH SIGNIFICANT (1/2" OR GREATER RAINFALL EVENT AND REPAIR IMMEDIATELY.
3. REMOVE SEDIMENT FROM SEDIMENT POOL AREA WHEN THE VOLUME IS DECREASED BY HALF. STABILIZE EXCAVATED MATERIAL APPROPRIATELY.
4. REMOVE DEBRIS FROM THE INLET AND REPLACE STONE AS NEEDED. IF THE INLET WAS COVERED WITH WIRE MESH THE MESH SHOULD BE CLEANED OF DEBRIS.
5. WHEN THE CONTRIBUTING DRAINAGE AREA HAS BEEN ADEQUATELY STABILIZED, REMOVE ALL MATERIALS AND DISPOSE OF SEDIMENT PROPERLY. BRING THE DISTURBED AREA TO THE GRADE OF THE DROP INLET. SMOOTH AND COMPACT IT AS NEEDED.
6. APPROPRIATELY STABILIZE ALL BARE AREAS AROUND THE INLET WITH GROUND COVER.

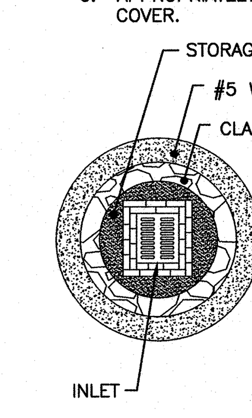

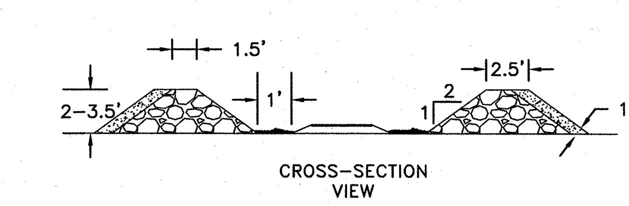

ROCK DOUGHNUT INLET PROTECTION

Scale: NTS 2 / 803
NCDENR 6.54

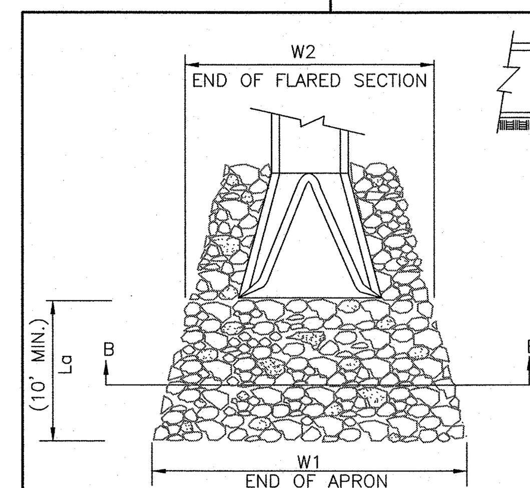

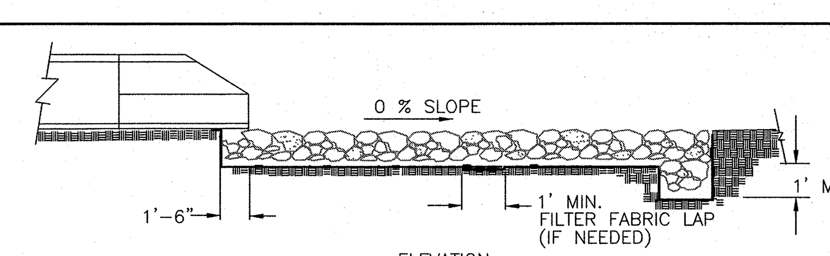

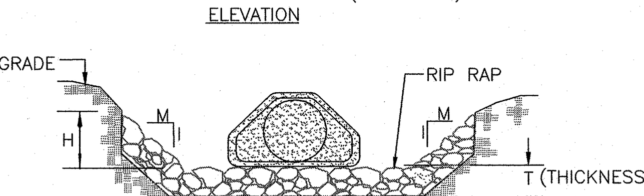

OUTLET ID	Q (cfs)	V (fps)	Do (ft)	Do (in)	La (ft)	W (ft)	d50 (ft)	dmax (ft)	H (ft)
Sed Bas 1	10.4	5	1.5	18	10	11.5	0.3	0.45	1.00
Skmr Bas 2	4.4	5	1	12	10	11	0.3	0.45	0.67
Skmr Bas 3	8.2	5	1	12	10	11	0.3	0.45	0.67
Skmr Bas 4	13.9	5	1	12	10	11	0.5	0.75	0.67
Skmr Bas 5	23	5	1	12	10	11	0.3	0.45	0.67
Outlet D1	3.6	4.4	1.25	15	10	11.25	0.3	0.45	0.83
Outlet E1	7.6	5.3	2	24	14	16	0.4	0.6	1.33
Outlet C1	18.5	6.4	2.5	30	16	18.5	0.5	0.75	1.67
Outlet B1	8	5.2	2	24	12	14	0.4	0.6	1.33
Outlet A1	12.5	6.3	2	24	14	16	0.5	0.75	1.33

NOTES:
1. CLASS OR MEDIAN SIZE OF RIP RAP AND LENGTH, WIDTH AND DEPTH OF APRON TO BE DESIGNED BY THE ENGINEER.
2. REFER TO THE CHARLOTTE MECKLENBURG STORM WATER DESIGN MANUAL FOR RIP RAP APRON DESIGN STANDARDS.
3. RIP RAP SHOULD EXTEND UP BOTH SIDES OF THE APRON AND AROUND THE END OF THE PIPE OR CULVERT AT THE DISCHARGE OUTLET AT A MAXIMUM SLOPE OF 2:1 AND A HEIGHT NOT LESS THAN TWO THIRDS THE PIPE DIAMETER OR CULVERT HEIGHT.
4. THERE SHALL BE NO OVERFLOW FROM THE END OF THE APRON TO THE SURFACE OF THE RECEIVING CHANNEL. THE AREA TO BE PAVED OR RIP RAPPED SHALL BE UNDERCUT SO THAT THE INVERT OF THE APRON SHALL BE AT THE SAME GRADE (FLUSH) WITH THE SURFACE OF THE RECEIVING CHANNEL. THE APRON SHALL HAVE A CUTOFF OR TOE WALL AT THE DOWNSTREAM END.
5. THE WIDTH OF THE END OF THE APRON SHALL BE EQUAL TO THE BOTTOM WIDTH OF THE RECEIVING CHANNEL. MAXIMUM TAPER TO RECEIVING CHANNEL 5:1
6. ALL SUBGRADE FOR STRUCTURE TO BE COMPACTED TO 95% OR GREATER.
7. THE PLACING OF FILL, EITHER LOOSE OR COMPACTED IN THE RECEIVING CHANNEL SHALL NOT BE ALLOWED.
8. NO BENDS OR CURVES IN THE HORIZONTAL ALIGNMENT OF THE APRON WILL BE PERMITTED.
9. FILTER FABRIC SHALL BE INSTALLED ON COMPACTED SUBGRADE PRIOR TO PLACEMENT OF RIP RAP.
10. ANY DISTURBED AREA FROM END OF APRON TO RECEIVING CHANNEL MUST BE STABILIZED.

USE USDA NOMOGRAPH FROM NC SEDIMENT AND EROSION CONTROL MANUAL OR CHARLOTTE MECKLENBURG STORM WATER DESIGN MANUAL FOR DESIGN DATA.

d50 (see fig 8.06 a&b "NC SEDIMENT AND EROSION CONTROL MANUAL"
dmax = 1.5 x d50
T = 1.5 X dmax.

RIP-RAP APRON AT PIPE OUTFALLS

Scale: NTS 4 / 803

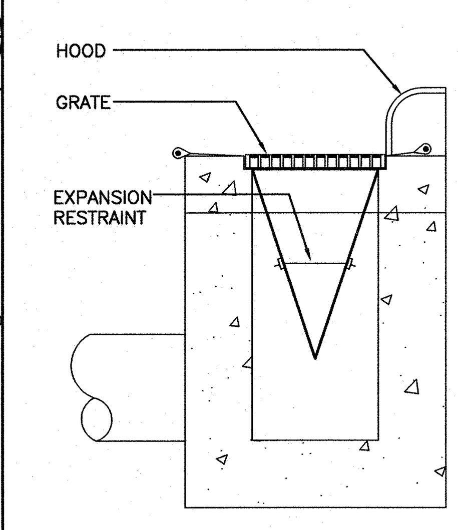

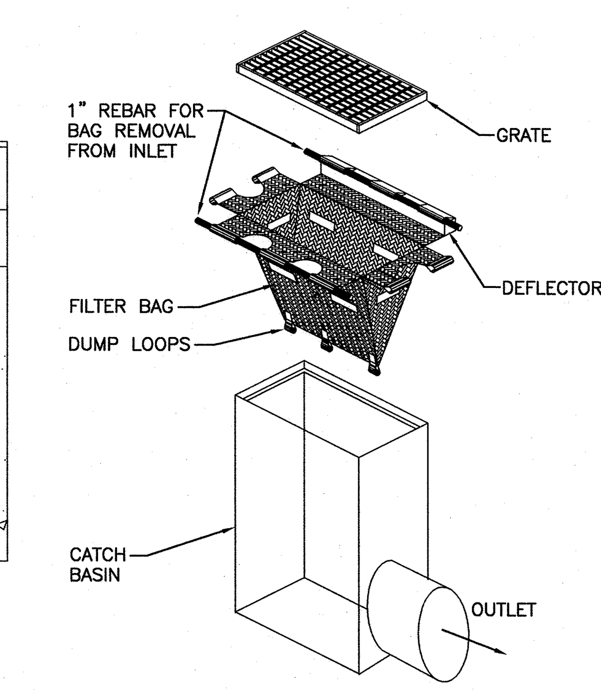

NOTES:
1. INLET MAINTENANCE SHALL BE DOCUMENTED IN PROJECT LOG BOOK.
2. FILTER TYPES SHALL BE APPROVED BY THE CITY INSPECTOR PRIOR TO INSTALLATION.
3. FILTER BAGS MAY BE REMOVED WHEN SITE IS STABILIZED AT THE DIRECTION OF THE ENGINEER.
4. FILTER BAGS SHALL BE REMOVED PRIOR TO STREET ACCEPTANCE.
5. FILTER BAGS SHALL BE CLEANED OR REPLACED ON A REGULAR BASIS (NOT BE MORE THAN HALF FULL AT ANY TIME).
6. FILTER BAGS SHALL NOT BE ALLOWED IN EXISTING CITY OR NCDOT ROADS.

CATCH BASIN PROTECTION SILT SACK

Scale: NTS 1 / 803

MERRICK® & COMPANY
1001 MOREHEAD SQUARE DRIVE, SUITE 530
CHARLOTTE, NC 28203
NC ENGINEERING FIRM F-0908 PHONE: 704.529.6500

THIS AND ANY OTHER ELECTRONIC MEDIA COUNTERPART IS AN INSTRUMENT OF SERVICE PREPARED BY MERRICK AND COMPANY FOR A DEFINED PROJECT. IT IS NOT INTENDED OR REPRESENTED TO BE SUITABLE FOR REUSE IN WHOLE OR IN PART ON EXTENSIONS OF THE PROJECT OR ON ANY OTHER PROJECT. REUSE OR MODIFICATION, OR ANY UTILIZATION IF NOT A FINISHED INSTRUMENT, WITHOUT THE PRIOR EXPRESS WRITTEN CONSENT OF MERRICK AND COMPANY SHALL BE AT THE SOLE RISK FOR THE UNAUTHORIZED USER WITHOUT LIABILITY OR LOSS EXPOSURE TO MERRICK AND COMPANY.

Shea Homes, LLC
8008 Corporate Center Dr.
Suite 300
Charlotte, NC 28226

REVISIONS:					
REV	REVISION DESCRIPTION	DATE:	CHANGED BY:	CHECKED BY:	APPROVED BY:
1	Initial Agency Review	03.10.14	CIP	CIP	CIP

		DATE:
DESIGN BY:	SRT	11/18/13
DRAWN BY:	KML	11/18/13
CHECKED BY:	MJK	01/29/14
APPROVED BY:	CIP	01/29/14

Barrington 2
Waxhaw, Union County, NC
Civil Site Details

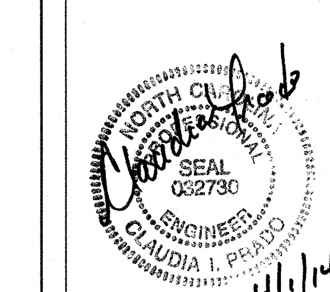

JOB NO: 65118007
DATE: 01/29/14
SHEET C803

Q:\CHA\Projects\8007-00-Bell Property\Design\CDs\Civil\8007-C800-Details-R01.dwg

GENERAL NOTES:
1. CONSTRUCT THE SEDIMENT BARRIER OF STANDARD STRENGTH OR EXTRA STRENGTH SYNTHETIC FILTER FABRICS.
2. ENSURE THAT THE HEIGHT OF THE SEDIMENT FENCE DOES NOT EXCEED 24 INCHES ABOVE THE GROUND SURFACE.
3. CONSTRUCT THE FILTER FABRIC FROM A CONTINUOUS ROLL CUT TO THE LENGTH OF THE BARRIER TO AVOID JOINTS. WHEN JOINTS ARE NECESSARY, SECURELY FASTEN THE FILTER CLOTH ONLY AT A SUPPORT POST WITH 4 FEET MINIMUM OVERLAP TO THE NEXT POST.
4. SUPPORT STANDARD STRENGTH FILTER FABRIC BY WIRE MESH FASTENED SECURELY TO THE UPSLOPE SIDE OF THE POSTS. EXTEND THE WIRE MESH SUPPORT TO THE BOTTOM OF THE TRENCH. FASTEN THE WIRE REINFORCEMENT, THEN FABRIC ON THE UPSLOPE SIDE OF THE FENCE POST. WIRE OR PLASTIC ZIP TIES SHOULD HAVE MINIMUM 50 POUND TENSILE STRENGTH.
5. ORANGE SAFETY FENCE IS REQUIRED AT BACK OF SILT FENCE WHEN GRADING IS ADJACENT TO SWIM BUFFERS, STREAMS OR WETLANDS (REFER TO SWIM BUFFER GUIDELINES). THE COLOR ORANGE IS RESERVED FOR VISUAL IDENTIFICATION OF ENVIRONMENTALLY SENSITIVE AREAS.
6. DRAINAGE AREA CAN NOT BE GREATER THAN 1/4 ACRE PER 100FT OF FENCE.
7. SLOPE LENGTHS CAN NOT EXCEED CRITERIA SHOWN IN TABLE 6.62A NORTH CAROLINA EROSION AND SEDIMENT CONTROL PLANNING AND DESIGN MANUAL.
8. DO NOT INSTALL SEDIMENT FENCE ACROSS STREAMS, DITCHES, WATERWAYS OR OTHER AREAS OF CONCENTRATED FLOW.

MAINTENANCE NOTES:
1. INSPECT SEDIMENT FENCES AT LEAST ONCE A WEEK AND AFTER EACH RAINFALL. MAKE ANY REQUIRED REPAIRS IMMEDIATELY.
2. SHOULD FABRIC OF A SEDIMENT FENCE COLLAPSE, TEAR, DECOMPOSE OR BECOME INEFFECTIVE, REPLACE IT PROMPTLY.
3. REMOVE SEDIMENT DEPOSITS AS NECESSARY TO PROVIDE ADEQUATE STORAGE VOLUME FOR THE NEXT RAIN AND TO REDUCE PRESSURE ON THE FENCE. TAKE CARE TO AVOID UNDERMINING THE FENCE DURING CLEANOUT.
4. REMOVE ALL FENCING MATERIAL AND UNSTABLE SEDIMENT DEPOSITS AND BRING AREA TO GRADE AND STABILIZE IT AFTER THE CONTRIBUTING DRAINAGE AREA HAS BEEN PROPERLY STABILIZED.

MAINTENANCE NOTES CONT.:
5. STONE OUTLETS SHOULD BE PLACED IN THE LOW-LYING AREAS OF SILT FENCING. STONE OUTLETS IN SILT FENCING SHOULD HAVE HARDWARE CLOTH TIED INTO THE STEEL POSTS TO PREVENT TRANSPORT OF WASHED STONE. IT SHOULD NOT BE NECESSARY TO PLACE STONE DOWNSTREAM OF THE HARDWARE CLOTH. A DEPTH OF 12-16 INCHES OF WASHED STONE IS RECOMMENDED.

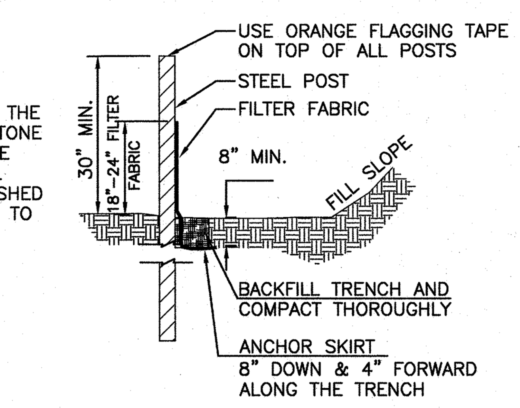

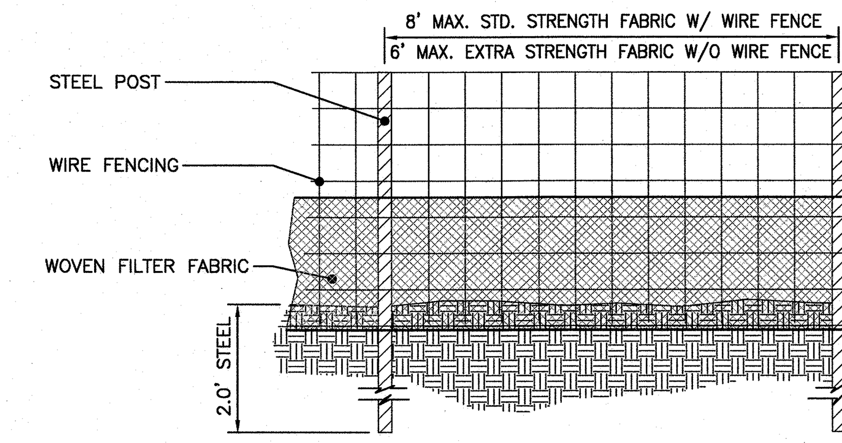

TEMPORARY SILT FENCE

Scale: NTS 7 / 804

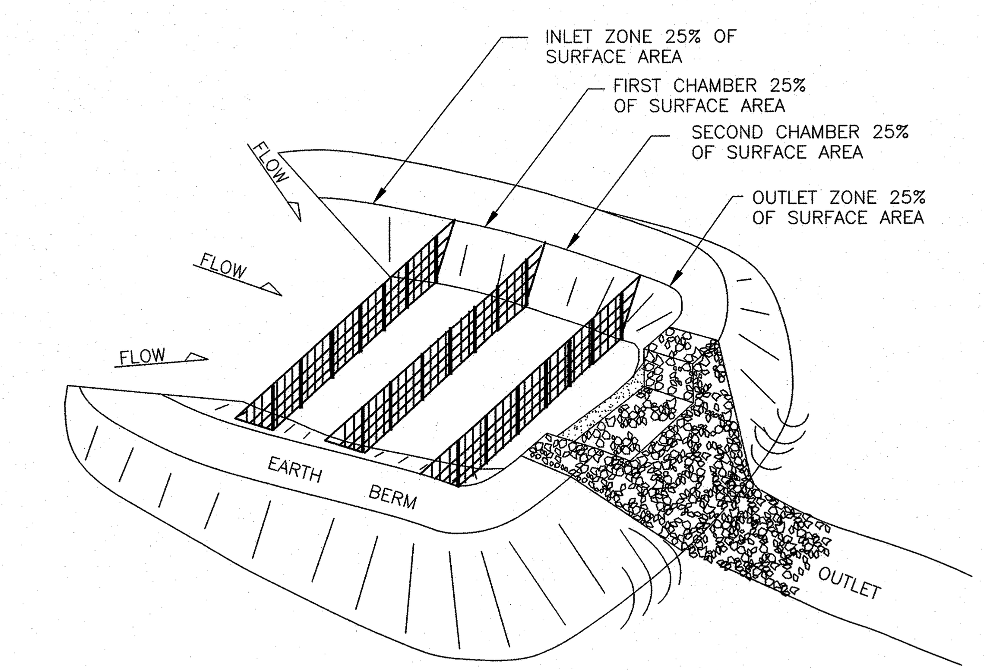

GENERAL NOTES:
1. THE BAFFLE MATERIAL NEEDS TO BE SECURED AT THE BOTTOM AND SIDES USING STAPLES.
2. MOST OF THE SEDIMENT WILL ACCUMULATE IN THE FIRST BAY, SO THIS SHOULD BE READILY ACCESSIBLE FOR MAINTENANCE.
3. INSPECT BAFFLES AT LEAST ONCE A WEEK AND AFTER EACH RAINFALL. MAKE ANY REQUIRED REPAIRS IMMEDIATELY
4. MAINTAIN ACCESS TO THE BAFFLES. SHOULD THE BAFFLE MATERIAL COLLAPSE, TEAR, DECOMPOSE, OR BECOME INEFFECTIVE, REPLACE IT PROMPTLY.
5. REMOVE SEDIMENT DEPOSITS WHEN IT REACHES HALF FULL TO PROVIDE ADEQUATE STORAGE VOLUME FOR THE NEXT RAIN AND TO REDUCE PRESSURE ON THE BAFFLES. DO NOT DAMAGE BAFFLES DURING CLEANOUT. SEDIMENT DEPTH SHOULD NEVER EXCEED HALF THE DESIGNED STORAGE DEPTH.
6. AFTER CONTRIBUTING DRAINAGE AREA HAS BEEN PROPERLY STABILIZED, REMOVE ALL BAFFLE MATERIALS AND UNSTABLE SEDIMENT DEPOSITS, BRING THE AREA TO GRADE, AND STABILIZE IT.
7. BAFFLE MATERIAL SHOULD BE 700 g/m^2 COIR EROSION BLANKET

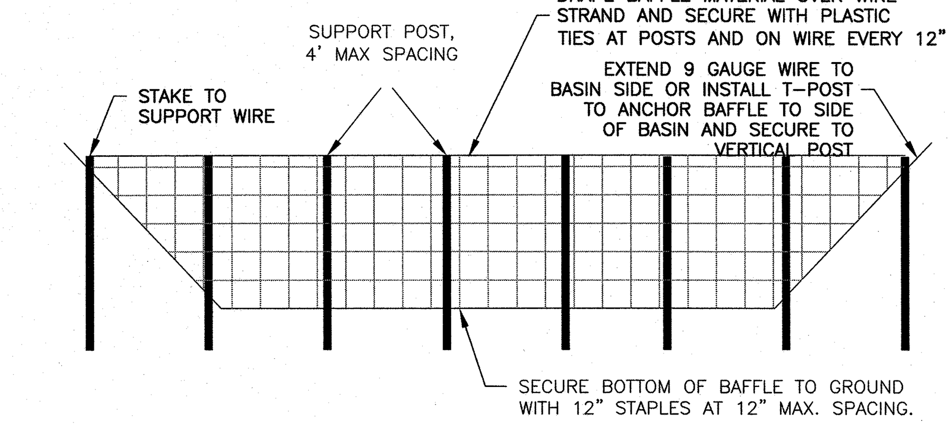

CROSS SECTION OF POROUS BAFFLE IN A SEDIMENT BASIN

POROUS BAFFLE INSTALLATION

Scale: NTS 3 / NCDENR 6.65 804

NOTES:
1. REMOVE ALL BARRIERS UPON COMPLETION OF PROJECT.
2. LANDSCAPING PLANS SHALL SHOW THE LOCATIONS OF ALL TREE PROTECTION FENCES.

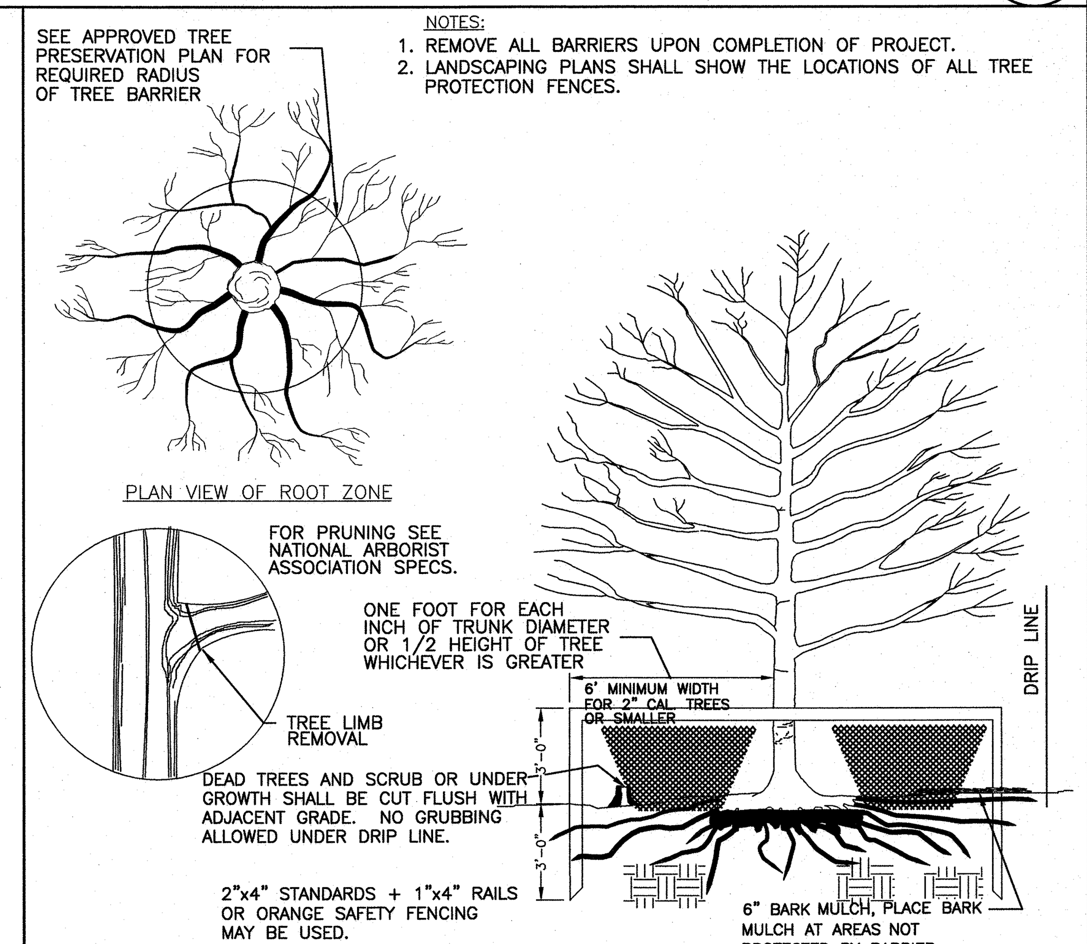

TREE PROTECTION DETAIL

Scale: NTS 6 / 804

GENERAL NOTES:
1. RIP RAP SIZE TO BE DESIGNED BY ENGINEER.
2. CHECK DAMS MAY BE USED IN SLOPING DITCHES OR CHANNELS TO SLOW VELOCITY OR TO CREATE SEDIMENT TRAPS.
3. ENSURE THAT MAXIMUM SPACING BETWEEN DAMS PLACES THE TOE OF THE UPSTREAM DAM AT THE SAME ELEVATION AS THE DOWNSTREAM DAM (SEE DIAGRAM BELOW).

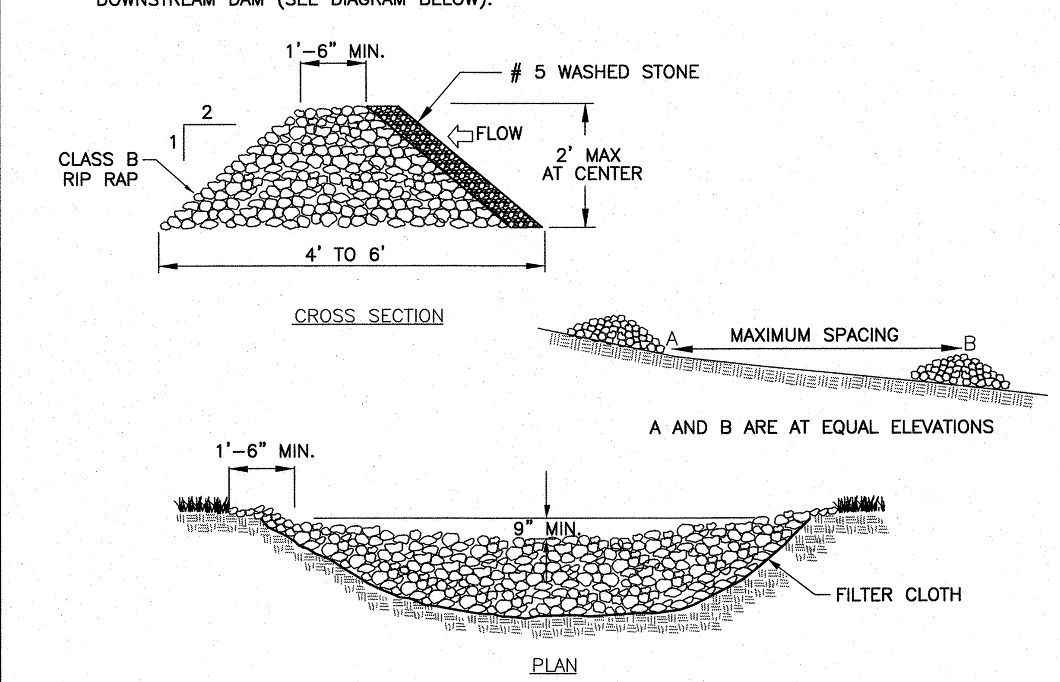

TEMPORARY ROCK CHECK DAM

Scale: NTS 5 / 804

NOTE:
1. REMOVE AND PROPERLY DISPOSE OF ALL TREES, BRUSH, STUMPS, AND OTHER OBJECTIONAL MATERIAL.
2. ENSURE THAT THE MINIMUM CONSTRUCTED CROSS SECTION MEETS ALL DESIGN REQUIREMENTS.
3. ENSURE THAT THE TOP OF THE DIKE IS NOT LOWER AT ANY POINT THAN THE DESIGN ELEVATION PLUS THE SPECIFIED SETTLEMENT.
4. PROVIDE SUFFICIENT ROOM AROUND DIVERSIONS TO PERMIT MACHINE REGRADING AND CLEANOUT.
5. VEGETATE THE RIDGE IMMEDIATELY AFTER CONSTRUCTION, UNLESS IT WILL REMAIN IN PLACE LESS THAN 30 WORKING DAYS.
6. DITCH SHOULD HAVE A MINIMUM LONGITUDINAL SLOPE OF 1%.
7. SILT FENCE MAY BE REQUIRED BEHIND BERM.
8. REFER TO DETAIL 6.20 OF NORTH CAROLINA EROSION AND SEDIMENT CONTROL PLANNING & DESIGN MANUAL FOR ADDITIONAL INFORMATION.

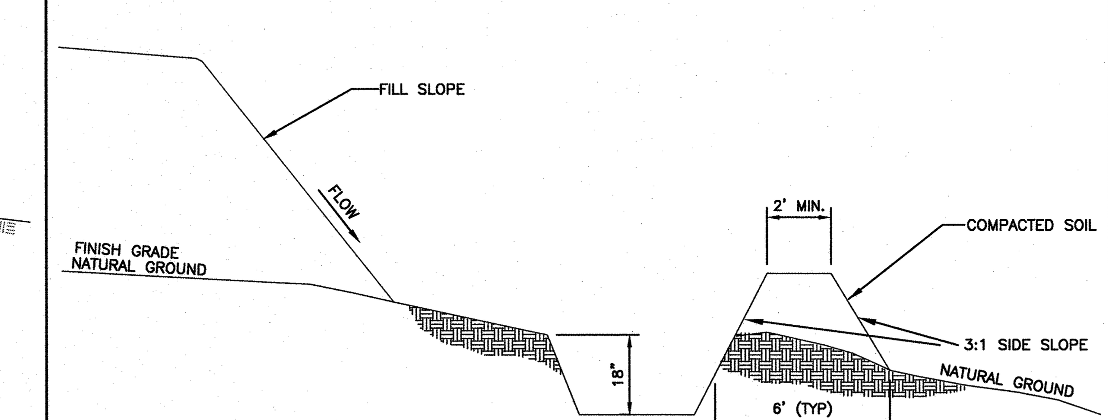

TEMPORARY DIVERSION DITCH

Scale: NTS 2 / 804

GENERAL NOTES:
1. AREA UNDER EMBANKMENT SHALL BE CLEARED, GRUBBED, AND STRIPPED OF ANY VEGETATION AND ROOT MAT, THE POOL AREA SHALL BE CLEARED.
2. THE FILL MATERIAL FOR THE EMBANKMENT SHALL BE FREE OF ROOTS OR OTHER WOODY VEGETATION AS WELL AS OVERSIZED STONES, ROCKS, ORGANIC MATERIAL OR OTHER OBJECTIONABLE MATERIAL. THE EMBANKMENT SHALL BE COMPACTED BY TRAVERSING WITH EQUIPMENT WHILE BEING CONSTRUCTED. SPILLWAYS SHOULD NOT BE CONSTRUCTED THROUGH FILL SECTIONS. ALL SPILLWAYS SHOULD BE LINED AND/OR RIPRAPPED.
3. SEDIMENT SHALL BE REMOVED AND TRAP RESTORED TO ITS ORIGINAL DIMENSIONS WHEN THE SEDIMENT HAS ACCUMULATED TO ONE-HALF THE DESIGN DEPTH OF THE TRAP. REMOVED SEDIMENT SHALL BE DEPOSITED IN A SUITABLE AREA IN SUCH A MANNER THAT IT WILL NOT ERODE.
4. THE TRAP SHALL BE INSPECTED AFTER EACH RAIN AND REPAIRS MADE AS NECESSARY.
5. CONSTRUCTION OPERATION SHALL BE CARRIED OUT IN SUCH A MANNER THAT EROSION AND WATER POLLUTION IS MINIMIZED.
6. ALL CUT AND FILL SLOPES SHALL BE 2:1 OR FLATTER, UNLESS CERTIFIED BY REGISTERED GEOTECHNICAL ENGINEER.
7. SEDIMENT BASIN EMBANKMENTS SHOULD BE PROVIDED WITH EROSION CONTROL AND STABILIZATION.
8. STORAGE AREA IS SHOWN AS RECTANGULAR FOR ILLUSTRATIVE PURPOSES ONLY, AND MAY BE CONSTRUCTED IN ANY SHAPE PROVIDED THE MINIMUM STORAGE VOLUME REQUIREMENT IS MET. THE BASIN SHOULD ALSO BE ORIENTED SUCH THAT THE FILTER AND THE MAIN FLOW OF WATER AND SEDIMENT ARE ON OPPOSITE ENDS ON THE LONGER BASIN DIMENSIONS.
9. REQUIRED STORAGE IS 1800 CUBIC FEET OF STORAGE VOLUME PER ACRES OF DRAINAGE AREA. IF CLEAR WATER FROM UNDISTURBED AREAS IN DRAINAGE BASIN ARE TAKEN AROUND OR THROUGH THE DENUDED AREA BY NON EROSIVE MEASURES THEN BASINS MAY BE SIZED BY DENUDED ACRES. RECOMMENDED STORAGE IS 1800 CUBIC FEET OF STORAGE PER ACRE OF DRAINAGE AREA.
10. THE LENGTH OF THE STONE OUTLET (SPILLWAY) IS TO BE BASED ON A 10 YEAR STORM.
11. WHENEVER TOPOGRAPHY ALLOWS, THE BASIN LENGTH SHOULD BE TWICE (2X) THE BASIN WIDTH, TO ALLOW FOR SETTLING, BAFFLES SHOULD BE PROVIDED IN THE BASIN WHERE THE LENGTH IS LESS THAN TWICE THE WIDTH.
12. CLEANOUT STAKES SHALL BE PLACED IN ALL SEDIMENT BASINS AT THE LOW POINT IN THE BASIN. THE STAKES SHALL BE MARKED SHOWING THE HALF FULL, CLEANOUT POINT, OF THE BASIN.
13. SAFETY FENCING 3' HIGH SHOULD BE PLACED AROUND ALL SEDIMENT BASINS.
14. FOR DESIGN OF RISER TYPE SEDIMENT BASINS, REFER TO THE NORTH CAROLINA DEPARTMENT OF ENVIRONMENT AND NATURAL RESOURCES EROSION AND SEDIMENT CONTROL PLANNING AND DESIGN MANUAL.
15. FOR SLOPES GREATER THAN 10' IN LENGTH AND PROTECTED BY SILT FENCE AT THE TOE OF THE SLOPE, SLOPE TERRACING WILL BE REQUIRED.
16. THE BERM ON SEDIMENT BASINS SHALL BE SEEDED ONCE FINAL GRADE HAS BEEN REACHED. THE SILT FENCE MAY BE REMOVED IF PERMISSION HAS BEEN GRANTED BY THE CITY/COUNTY LAND DEVELOPMENT INSPECTOR AFTER THE GRASS HAS GERMINATED AND STABLE GROUND HAS BEEN ESTABLISHED.
17. WASHED STONE AND WIRE BACKING SHALL BE USED WITH SILT FENCE WHENEVER SILT FENCE IS PLACED AT THE TOE OF A SLOPE >10' VERTICAL OR ALONG ANY CHANNEL OR WATER COURSE WHERE 50' OF BUFFER IS NOT PROVIDED.

SEDIMENT BASIN NOTES

Scale: NTS 8 / NCDENR 804

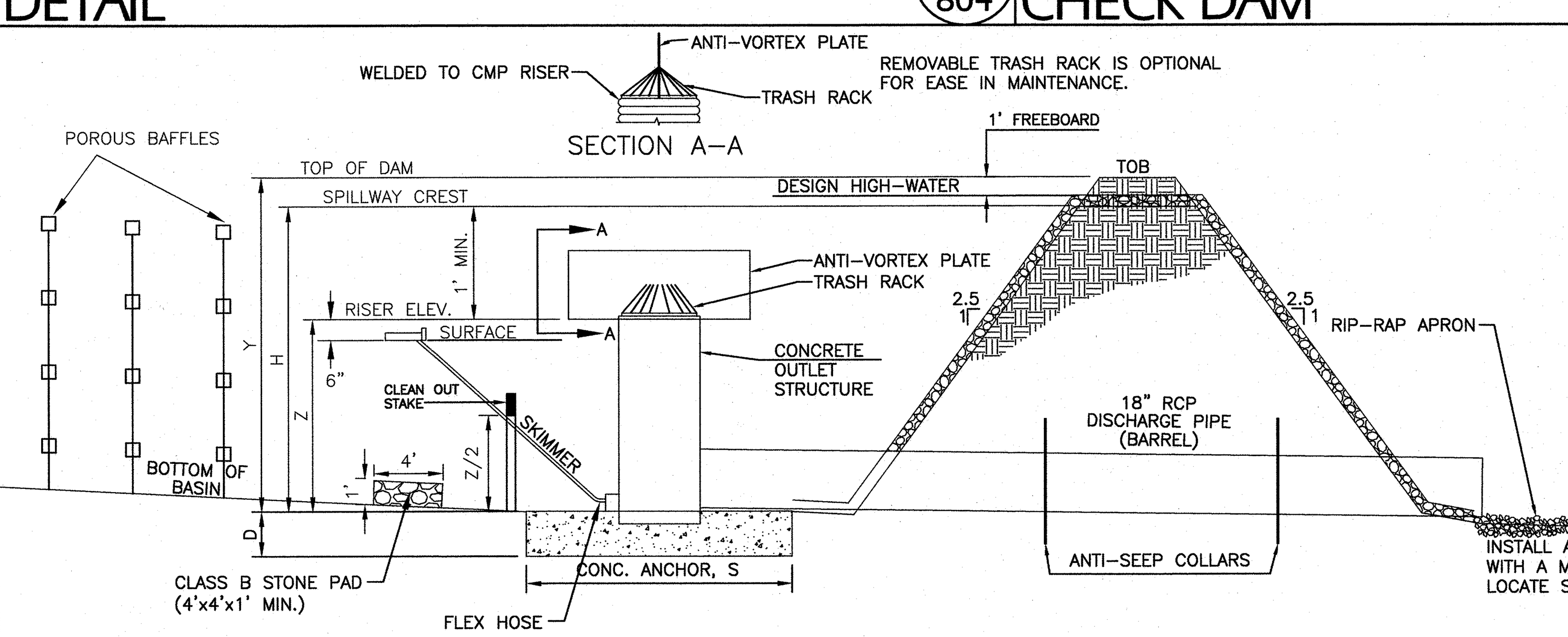

INSTALL AT LEAST ONE WATERTIGHT ANTI-SEEP COLLAR WITH A MINIMUM PROTECTION OF 1.5' AROUND THE BARREL. LOCATE SLIGHTLY DOWNSTREAM FROM THE DAM CENTERLINE.

NOTES
1. SEED AND PLACE MATTING FOR EROSION CONTROL ON INTERIOR AND EXTERIOR SIDESLOPES IMMEDIATELY AFTER INSTALLATION.
2. INSTALL A MINIMUM OF 3 COIR FIBER BAFFLES IN ACCORDANCE WITH PRACTICE STD. 6.65.
3. INSTALL SKIMMER AND COUPLING TO RISER STRUCTURE OR DIRECTLY INTO EMBANKMENT 1 FT. FROM BOTTOM OF BASIN.
4. THE ARM PIPE SHALL HAVE A MINIMUM LENGTH FO 6 FT. BETWEEN THE SKIMMER AND COUPLING.

RISER/SKIMMER TYPE BASIN DATA

BASIN NUM	DRAINAGE AREA (AC)	Q10 (CFS)	DENUDED AREA (AC)	REQ'D VOLUME (CFT)	PROVIDED VOLUME (CFT)	BOTTOM ELEV (MSL)	BOTTOM AREA (SQFT)	SURFACE REQ'D (SQFT)	SURFACE AREA (SQFT)	RISER HGT, Z (FT)	RISER DIAM (INCH)	BARREL DIAM (INCH)	ANTI-FLOAT LEN, S (FT)	ANTI-FLOAT THK (FT)	BERM ELEV, Y	TOP WIDTH (FT)	SPILLWAY DIMS W (FT)	SPILLWAY DIMS L (FT)	SPILLWAY DIMS ELEV, H (FT)
1	7.2	23.0	6.7	12960	17125	560	1821	10005	10081	10.5	5'x5'	18"	6	2	6	8	17	10	4.5

** INSTALL PERMANENT DETENTION STRUCTURE FOR BASIN #1 REFER TO SHEET C501 FOR DETAIL. CONTRACTOR TO ATTACH FAIRCLOTH SKIMMER DURING EROSION CONTROL PHASE AND BLOCK DETENTION ORIFICES UNTIL DRAINAGE AREA IS STABILIZED AND NCDENR INSPECTOR APPROVES REMOVAL OF EROSION CONTROL MEASURES.

SKIMMER/RISER TYPE SEDIMENT BASIN

Scale: NTS 4 / NCDENR 804

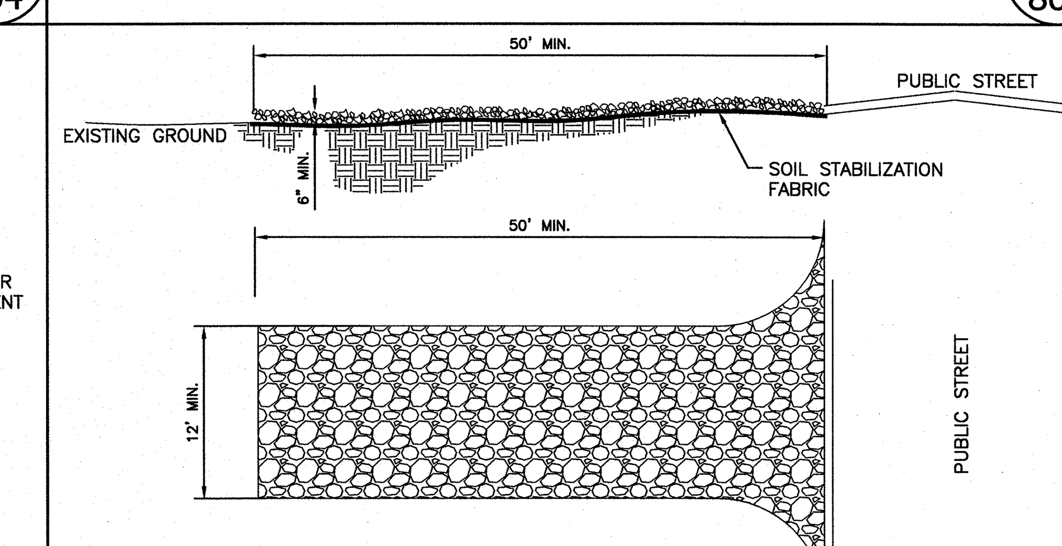

NOTES:
1. A STABILIZED ENTRANCE PAD OF 2"-3" COARSE AGGREGATE OR RAIL ROAD BALLAST SHALL BE LOCATED WHERE TRAFFIC WILL ENTER OR LEAVE THE CONSTRUCTION SITE ONTO A PUBLIC STREET.
2. FILTER FABRIC OR COMPACTED CRUSHER RUN STONE MAY BE USED AS A BASE FOR THE CONSTRUCTION ENTRANCE.
3. THE ENTRANCE SHALL BE MAINTAINED IN A CONDITION WHICH WILL PREVENT TRACKING OR FLOWING OF SEDIMENT ONTO PUBLIC STREETS OR EXISTING PAVEMENT. THIS MAY REQUIRE PERIODIC TOP DRESSING WITH ADDITIONAL 2" STONE AS CONDITIONS WARRANT AND REPAIR OR CLEANOUT OF ANY MEASURES USED TO TRAP SEDIMENT.
4. ANY SEDIMENT SPILLED, DROPPED, WASHED, OR TRACKED ONTO PUBLIC STREETS MUST BE REMOVED IMMEDIATELY.
5. WHEN APPROPRIATE, WHEELS MUST BE CLEANED TO REMOVE SEDIMENT PRIOR TO ENTERING A PUBLIC STREET. WHEN WASHING IS REQUIRED, IT SHALL BE DONE IN AN AREA STABILIZED WITH CRUSHED STONE WHICH DRAINS INTO AN APPROVED SEDIMENT BASIN.
6. SOIL STABILIZATION FABRIC (AS SPECIFIED BY THE DESIGNER) SHALL BE USED.

STABILIZED CONSTRUCTION ENTRANCE

Scale: NTS 1 / NCDENR 6.06 804

MERRICK® & COMPANY
1001 MOREHEAD SQUARE DRIVE, SUITE 530
CHARLOTTE, NC 28203
NC ENGINEERING FIRM F-0908 PHONE: 704.529.6500

THIS AND ANY OTHER ELECTRONIC MEDIA COUNTERPART IS AN INSTRUMENT OF SERVICE PREPARED BY MERRICK AND COMPANY FOR A DEFINED PROJECT. IT IS NOT INTENDED OR REPRESENTED TO BE SUITABLE FOR REUSE IN WHOLE OR IN PART ON EXTENSIONS OF THE PROJECT OR ON ANY OTHER PROJECT. REUSE OR MODIFICATION, OR ANY UTILIZATION IF NOT A FINISHED INSTRUMENT, WITHOUT THE PRIOR EXPRESS WRITTEN CONSENT OF MERRICK AND COMPANY SHALL BE AT THE SOLE RISK FOR THE UNAUTHORIZED USER WITHOUT LIABILITY OR LOSS EXPOSURE TO MERRICK AND COMPANY.

Shea Homes, LLC
8008 Corporate Center Dr.
Suite 300
Charlotte, NC 28226

REVISIONS:

REV	REVISION DESCRIPTION	DATE:	CHANGED BY:	CHECKED BY:	APPROVED BY:
1	Initial Agency Review	03.10.14	CIP	CIP	CIP

		DATE:
DESIGN BY:	SRT	11/18/13
DRAWN BY:	KML	11/18/13
CHECKED BY:	MJK	01/29/14
APPROVED BY:	CIP	01/29/14

Barrington 2
Waxhaw, Union County, NC
Civil Site Details

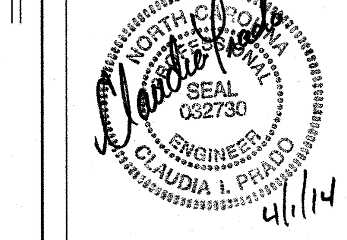

JOB NO: 65118007
DATE: 01/29/14
SHEET C804

Q:\CHA\Projects\8007-00-Bell Property\Design\CDs\Civil\8007-C800-Details-R01.dwg

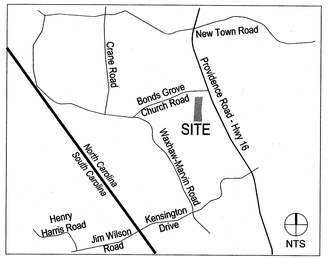

VICINITY MAP

PLANTING SPECIFICATIONS:

1. THE DEVELOPER SHALL FURNISH AND INSTALL ALL PLANT MATERIALS LISTED ON THE PLAN SCHEDULE.
2. PLANT MATERIALS SHALL CONFORM TO THE REQUIREMENTS DESCRIBED IN THE LATEST EDITION OF "AMERICAN STANDARD FOR NURSERY STOCK," WHICH IS PUBLISHED BY THE AMERICAN SOCIETY OF NURSERYMEN.
3. PLANT MATERIALS MUST BE FROM THE APPROVED SPECIES LIST IN SECTION 9.15 OF THE CITY OF WAXHAW UNIFIED DEVELOMENT ORDINANCE.
4. SHADE TREES (BALL AND BURLAP) SHALL MEASURE A MINIMUM OF 2-2.5 INCH CALIPER, AND 10 TO 12 FEET IN HEIGHT AT TIME OF PLANTING.
5. ORNAMENTAL TREES SHALL MEASURE A MINIMUM 1.5-2 INCH CALIPER FOR SINGLE-STEM TREES OR 1 TO 1.5 INCH CALIPER FOR MULTI-STEM TREES, AND 6 TO 8 FEET IN HEIGHT AT TIME OF PLANTING.
6. LARGE SHRUBS, NORMALLY PLANTED FOR SCREENING, SHALL MEASURE A MINIMUM OF 3 TO 3 1/2 FEET IN HEIGHT AT TIME OF PLANTING.
7. SMALL SHRUBS SHALL MEASURE A MINIMUM OF 18 TO 24 INCHES IN SPREAD AND/OR HEIGHT AT THE TIME OF PLANTING.
8. PREPARATION OF PLANT PITS, HEDGE TRENCHES AND SHRUB BEDS SHALL BE DONE IN CONFORMANCE WITH LEAFLET NO: 601, "PLANTING TECHNIQUES FOR TREES AND SHRUBS," NORTH CAROLINA COOPERATIVE EXTENSION SERVICE, (1997).
9. EXCAVATE PITS WITH VERTICAL SIDES APPROXIMATELY THE DEPTH OF THE ROOTBALL AND WITH A CIRCULAR OUTLINE WHICH SHALL BE APPROXIMATELY 2 TO 3 TIMES WIDER THAN THE ROOTBALL. FOR PLANTING PITS, BEDS OR TRENCHES WHICH ARE TO BE DEVELOPED WHERE PAVING EXISTED PREVIOUSLY, ALL PAVING AND BASE STONE SHALL BE REMOVED AS PART OF THE EXCAVATION.
10. REMOVE ROCK DEBRIS, INORGANIC COMPOSITIONS, AND CHEMICAL RESIDUES FROM SOIL IN PLANTING PITS.
11. CULTIVATE SHRUB PLANTING PITS TO A MINIMUM DEPTH OF 18 INCHES.
12. INSTALL ROOTBALL ON A FLAT, COMPACT SURFACE OF UNDISTURBED SOIL AND REMOVE ANY INORGANIC TIES ON TOP OF THE ROOTBALL. REMOVE TOP 1/3 OF WIRE BASKETS.
13. LEAVE THE TOP OF THE ROOTBALL EXPOSED, TO BE COVERED BY MULCH ONLY.
14. FINISH THE PLANTING WITH A MINIMUM 3-INCH LAYER OF MULCH AND PINE NEEDLES, TREE BARK OR SIMILAR MATERIALS DISTRIBUTED AROUND THE TREE BARK.
15. PREPARE SOIL, PLANT, FERTILIZER, MULCH, AND CONTROL INSECTS AND DISEASE IN CONFORMANCE WITH THE NORTH CAROLINA COOPERATIVE EXTENSION SERVICE, "LANDSCAPE MANAGEMENT CALENDAR."
16. EACH TREE, SHRUB, OR VINE SHALL BE PRUNED IN AN APPROPRIATE MANNER, IN ACCORDANCE WITH ACCEPTED STANDARD PRACTICE.
17. EXISTING TREES SHALL BE PRESERVED WHEREVER POSSIBLE.
18. THE DEVELOPER SHALL BE RESPONSIBLE FOR MAINTENANCE OF LANDSCAPING ON THE PROPERTY ON A CONTINUING BASIS FOR THE LIFE OF THE DEVELOPMENT.
19. REQUIRED LANDSCAPING SHALL BE MAINTAINED IN PERPETUITY, IN ACCORDANCE WITH SECTION 9.8.4.1. AFTER INITIAL INSTALLATION, IT SHALL BE THE RESPONSIBILITY OF THE OWNER OF THE PROPERTY UPON WHICH THE LANDSCAPING IS INSTALLED TO MAINTAIN ALL REQUIRED PLANTINGS IN A HEALTHY, VIGOROUS, AND ATTRACTIVE STATE, OR REPLACE DEAD, DISEASED OR DETERIORATED PLANTS.
20. QUANTITIES SHOWN ARE FOR CONVENIENCE ONLY. THE CONTRACTOR SHALL BE RESPONSIBLE FOR QUANTITIES AS SHOWN ON THE PLAN.
21. ADJUST TREE PLANTING LOCATIONS TO AVOID UNDERGROUND UTILITIES.
22. SEE SPECIFICATIONS FOR SEEDING REQUIREMENTS. ALL DISTURBED AREAS SHALL BE SEEDED.
23. THE CONTRACTOR SHALL BE RESPONSIBLE FOR VERIFYING THE LOCATION OF ALL UNDERGROUND UTILITIES PRIOR TO EXCAVATION.
24. ALL PLANTING AREAS SHALL BE MULCHED WITH A TWO-TO-THREE INCH LAYER OF BARK, PINE NEEDLES, OR OTHER SIMILAR MATERIAL TO COVER THE COMPLETE PLANTING AREA.

PLANT SCHEDULE

KEY	QTY.	BOTANICAL NAME	COMMON NAME	SIZE	COND.
AER	51	Acer Rubrum	Red Maple	2–5" Cal.	B&B
QS	31	Quercus Shumardii	Shumard Oak	2–5" Cal.	B&B
VLP	30	Ulmus Parvifolia	Lacebark Elm	2–5" Cal.	B&B
CC	3	Cercis Canadensis	Redbud	2–5" Cal.	B&B

SEEDING SCHEDULE

TYPE I SEEDING (LAWNS, SHOULDER, OR OTHER MAINTAINED AREAS):
100 LBS. OF LIME
15 LBS. OF 19-23-12
4 LBS. OF TALL FESCUE, CONTAINING A BLEND OF 2 OR MORE TALL FESCUES
1 LB. OF SERICEA LESPEDEZA (USE UNSCARIFIED SEED AUGUST 15 TO FEBRUARY 1)
1/4 LB. OF GERMAN MILLET (MAY 1 TO AUGUST 15)
1 LB. OF RYE GRAIN (PRIOR TO MAY 1 OR AFTER AUGUST 15)

SEEDING MIXTURES OTHER THAN THOSE LISTED ABOVE SHALL BE APPROVED BY THE TOWN INSPECTOR PRIOR TO SEEDING.

LEGEND:

EXTERIOR TREE SAVE
INTERIOR TREE SAVE
WATER LINE
PROPOSED R/W
RED MAPLE TREE
TREE PROTECTION FENCE
PROPOSED SEWER LINE
PROPOSED PROPERTY LINE
SHUMARD OAK TREE
30' X 30' PROPOSED SIGHT TRIANGLE
PROP. EDGE OF PAVEMENT BOC
PROPOSED WATER METER
LACEBARK ELM TREE
DRIVEWAY
PROPOSED 5' SIDEWALK
PROPOSED SEWER LATERAL
REDBUD TREE

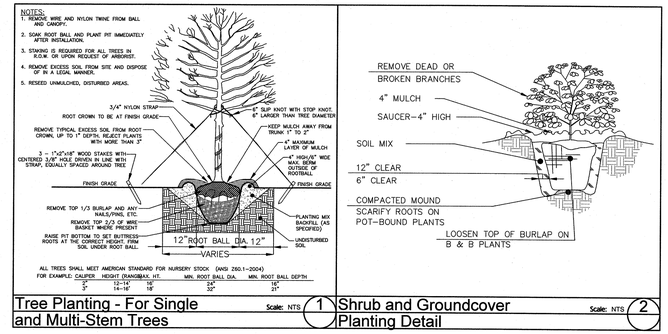

Tree Planting - For Single and Multi-Stem Trees — Scale: NTS — 1

Shrub and Groundcover Planting Detail — Scale: NTS — 2

NOTE:

PERIMETER TREE PRESERVATION AREAS WITHIN DEEDED LOT AREAS ARE TO BE RECORDED WITH A PERMANENT LANDSCAPE PRESERVATION EASEMENT.

INTERIOR TREE PROTECTION AREAS SHALL CONTAIN NO LESS THAN ONE (1) TREE PER 2500 SQ. FT. OF TREE PROTECTION AREAS. WHERE EXISTING TREES ARE INSUFFICIENT TO MEET THIS STANDARD, NEW TREES SHALL BE A MINIMUM OF TWO (2) INCH CALIPER AT PLANTING.

MINIMUM OF 3- 8" DBH TREES PER LOT, NOT INCLUDING STREET TREES PER WAXHAW UDO SECTION 9.21.10.

ANY TREE REMOVAL WITHIN TREE SAVE AREAS REQUIRES PERMIT AND MITIGATION. CONTRACTOR/DEVELOPER TO TAKE CARE AND NOT DAMAGE TREES WITHIN PROTECTED AREAS DURING CONSTRUCTION.

STREET LIGHTING TO COMPLY WITH WAXHAW UDO SECTION 18.10.6. LIGHTS TO BE LOCATED AT ALL INTERSECTIONS AND MID-BLOCK LOCATIONS WITH INTERVALS NOT TO EXCEED 250 FT.

STREET TREES SHALL BE PLACED 40'-60' ON CENTER. THEY SHALL BE PLACED WITHIN 25' OF BACK OF CURB AND OUTSIDE RIGHT-OF-WAY NO CLOSER THAN 4' FROM SIDEWALK.

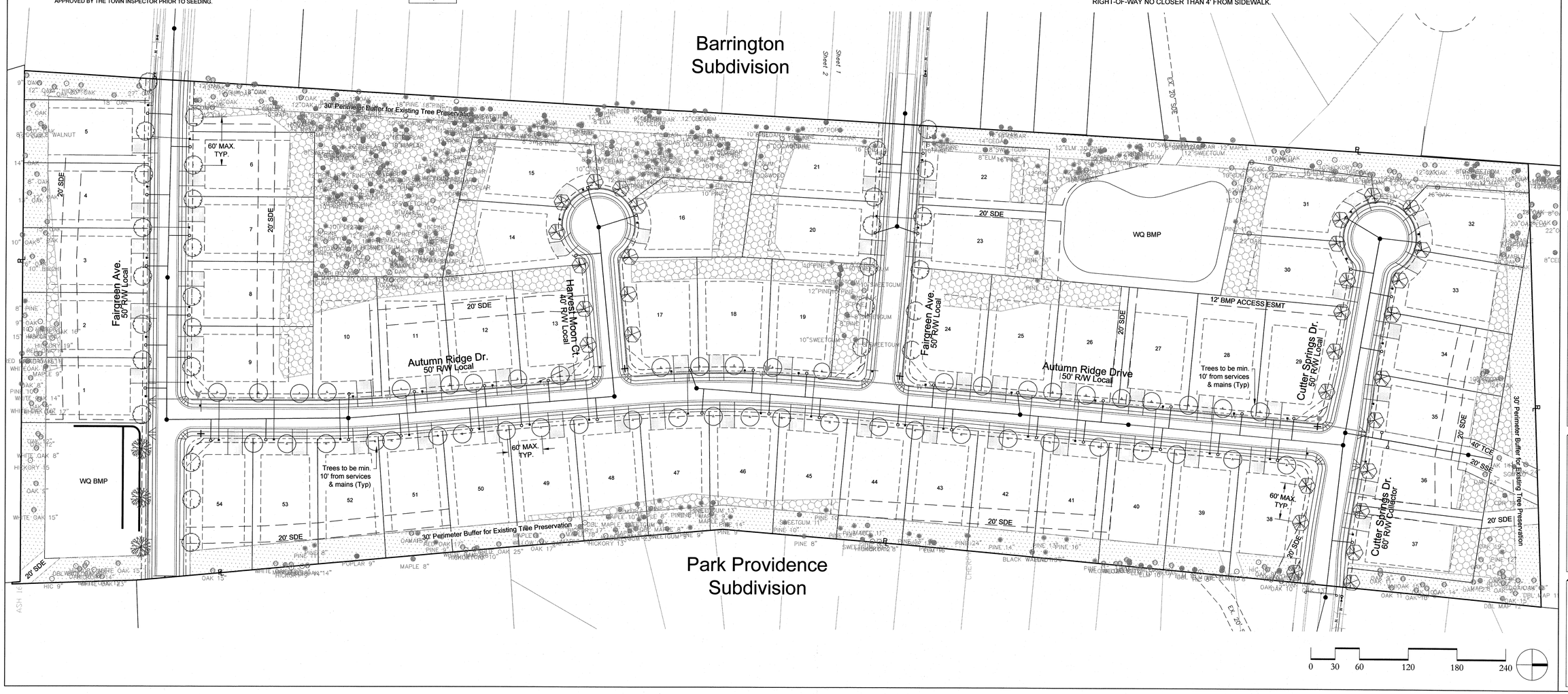

MERRICK & COMPANY
1001 MOREHEAD SQUARE DRIVE, SUITE 530
CHARLOTTE, NC
NC ENGINEERING FIRM # C-0908
PHONE: 704.529.6500

THIS, AND ANY OTHER ELECTRONIC, NON COPYRIGHT IS AN INSTRUMENT OF SERVICE OF MERRICK & COMPANY, AND IS NOT TO BE USED FOR ANY PURPOSE IF IT IS NOT INTENDED OR REPRESENTED TO BE SUITABLE FOR REUSE IN WHOLE OR IN PART, FOR ANY PURPOSE OTHER THAN THE SPECIFIC PROJECT FOR WHICH IT WAS PREPARED. ANY REUSE, OR MODIFICATION, OF ANY DELIVERABLE IF NOT A PROVEN MISTAKE-FREE, COMPLETE, AND ACCURATE DOCUMENT, IS AT THE RECEIVING PARTY'S SOLE LIABILITY, OR LOSS. DISCLOSURE TO A PERSON AND/OR CORPORATION WITHOUT

Shea Homes, LLC
8008 Corporate Center Dr.
Suite 300
Charlotte, NC 28226

REVISIONS:				
REV	REVISION DESCRIPTION	DATE:	DRAWN BY:	APPROVED BY:
1	Initial Agency Review	04/01/14	CIP BY:	CIP BY:

		DATE:
DESIGN BY:	SRT	11/18/13
DRAWN BY:	KAL	11/18/13
CHECKED BY:	MJK	01/29/14
APPROVED BY:	CIP	01/29/14

Barrington 2
Waxhaw, Union County, NC
Planting Plan

NORTH CAROLINA PROFESSIONAL SEAL 032730 ENGINEER CLAUDIA I. PEARCE
4/1/14

JOB NO: 65118007
DATE: 01/29/14
SHEET C900

\\merrick.com\CES\CHA\Projects\80007-00-Bell Property\Design\CDs\Civil\80007-C900-Planting.dwg